VIN:																	
MODEL:													**OWNER NAME & ADDRESS**				
VARIANT:																	
COLOUR:																	
ENGINE NO.:													**CONTACT NO.**				
KEY NO.:													**E-mail ID:**				
INVOICE DATE:													**SELLING DEALER NAME & CODE**				
ODOMETER READING												**KM**					
REGISTRATION NO.:																	
BATTERY MAKE:													**DEALER SHOWROOM ADDRESS & CONTACT NO. (STAMP)**				
BATTERY NO.:																	
BATTERY BATCH																	
TYRE	**MAKE**					**BATCH CODE**											
Front Right													**CONTACT NO. FOR SERVICE APPOINTMENT & SUPPORT**				
Front Left																	
Rear Right																	
Rear Left																	
Spare																	

For any assistance with regard to our product, please contact General Manager/Works Manager at any of our Dealer or Authorised Service Station. For additional enquiry you may contact our Regional Office or Service Department. The addresses and phone numbers are given in Service Network section of this Manual / Service Network booklet.

MAINTENANCE SERVICE RECORDS

DATE OF SERVICE	KIND OF SERVICE	MILEAGE (KM)	DESCRIPTION OF JOB	NAME OF SERVICING DEALER/ MASS	JOB CARD NO.	MECHANICS SIGNATURE

F: .... FREE SERVICE, P:.... PAID SERVICE, W:.... WARRANTY JOB, A:.... ACCIDENTAL JOB

1ST. FREE INSPECTION COUPON *(CUSTOMER'S COPY)* *(1,000 KM or 1 MONTH)*

WHICHEVER COMES FIRST

JOB MARK: √ : Checked OK, A: Adjust, C: Clean, R: Replace or Chance, L: Lubricate, T: Tighten, O: Rotate, I: Inspect and correct or replace if necessary.

1. ENGINE — JOB

1. Engine Coolant (Level, Leakage)
2. Engine oil (Level, Leakage)
3. Cooling System hoses & connections (Leakage, Damage)

2. FUEL

1. Fuel filter, Fuel tank cap, Fuel lines and connections (Leakage)
2. Fuel Filter - Water Draining

3. CLUTCH AND TRANSMISSION

1. Clutch Slipping (Dragging, Damage)
2. Transaxle Oil (Level, Leakage)
3. Gear Shifter Cable (operation)
4. Clutch fluid (Level, Leakage) (Diesel)

4. BRAKE

1. Brake fluid (Level, Leakage)
2. Brake pedal (Pedal to carpet clearance)
3. Parking brake lever (Play)
4. Brake hoses & pipes (Leakage, Damage)

5. WHEEL

1. Tyres (Air pressure, Abnormal wear, damage)
2. Wheels (Inspect)

6. FRONT AND REAR SUSPENSION — JOB

1. Struts/Shock Absorbers (Oil leakage)

7. STEERING

1. Steering wheel (Play)
2. All Rods & Arms (Loose, Damage, Wear)
3. Power Steering System (Operation)
4. Steering gear box (Inspect)
5. Tilt steering (Operation)

8. ELECTRICAL

1. Battery electrolyte (Level, Leakage)
2. Lighting system/Horn (Operation)
3. Wiper (Operation)

9. BODY

1. All Latches, Hinges & Locks/Central Locking (Operation)

10. HEATING AND AIR CONDITIONING

1. Drive belt (Tension)
2. Check functioning of Recirculating flap
3. Check all Hose Joints
4. A/C filter element (inspect)

11. ROAD TEST

1. Operation of Brakes, clutch, Gear shifting and Speedometer
2. Body & Chassis noise

COST OF MATERIALS AND CONSUMABLES TO BE BORNE BY CUSTOMER

* **MODEL CODE :** *VITARA BREZZA - **ALK413D***

1ST. FREE INSPECTION COUPON

(DEALER'S COPY) *(1,000 KM or 1 MONTH)*

Please see overleaf for special instructions

Model Code*	
Chassis No. :	
Engine No. :	
Mileage	
Date of Invoice	
Date of Inspection	
Registration No.	
Service Dealer/Mass Code	
Customer Name	
Address (Please write complete address)	
Tel. No.	

Mechanic's Signature

Service Manager's Signature

Customer's Signature

Stamp of Selling dealer (Code & Full Address)

For Servicing Dealer/Mass

1.0 : Please fill up Model codes correctly.

2.0 : Please fill up Complete chasis No.

3.0 : Please fill up customer details i.e. Address and Telephone No. legibly and correctly for the latest owner.

For Selling Dealer

1.0 : Please send all Free Service Coupon to us once in a month after settlement of free service charges.

Service Division
Maruti Suzuki India Limited

Model Code*								
Chassis No. :								
Engine No. :								
Mileage								
Date of Invoice								
Date of Inspection								
Registration No.								
Service Dealer/Mass Code								
Customer Name								
Address (Please write complete address)								
Tel. No.								

Mechanic's Signature

Service Manager's Signature

Customer's Signature

2ND. FREE INSPECTION COUPON *(CUSTOMER'S COPY)* *(5,000 KM or 6 MONTHS)* *WHICHEVER COMES FIRST*

JOB MARK: √ : Checked OK, A: Adjust, C: Clean, R: Replace or Change, L: Lubricate, T: Tighten, O:Rotate, I: Inspect and correct or replace If necessary.

	JOB
1. ENGINE	
1. Engine Coolant (Level, Leakage)	
2. Engine Oil (Level, Leakage)	
3. Cooling System hoses & connections (Leakage, Damage)	
4. Exhaust System (Noise, Leakage)	
2. FUEL	
1. Fuel filter, Fuel tank cap, Fuel lines and connections (Leakage)	
2. Fuel filter water draining	
3. CLUTCH AND TRANSMISSION	
1. Clutch Slipping (Dragging, Damage)	
2. Transaxle Oil (Level Leakage)	
3. Gear Shifter Cables (Operation)	
4. Drive shaft boots (Damage)	
5. Clutch fluid (Level, Leakage)	
4. BRAKE	
1. Brake fluid (Level, Leakage)	
2. Brake pedal (Pedal to carpet clearance)	
3. Parking brake lever (Play)	
4. Brake Disc & Pads (Inspect)	
5. Brake hoses & pipes (Leakage, Damage)	
5. WHEEL	
1. Tyres (Air pressure, Abnormal wear, Rotation)	
2. Wheels (Inspect)	
3. Front/Rear Wheel Bearings (Loose,Damage)	

	JOB
6. FRONT AND REAR SUSPENSION	
1. Suspension strut/shock absorber(Oil Leakage)	
2. Suspension arms, Knuckle, Rear spring (Damage, Loose)	
3. All Nuts & Bolts (Tighten)	
7. STEERING	
1. Steering wheel (Play)	
2. All Rods & Arms (Loose, Damage, Wear)	
3. Power Steering System (Operation)	
4. Steering gear box (Inspect)	
5. Tilt steering (Operation)	
8. ELECTRICAL	
1. Battery electrolyte (Level, Leakage)	
2. Lighting system/Horn (Operation)	
3. Wiring Harness Connections (Looseness)	
4. AUX/ USB/ Accessory Socket (Operation)	
5. Wiper (Operation)	
9. BODY	
1. All Latches, Hinges & Locks/Central Locking (Operation/Lubrication)	
2. All Chassis nuts & bolts (Inspect)	
3. Seat belt (Operation)	
4. Seat latch, lever & knob (Operation)	
10. HEATING AND AIR CONDITIONING	
1. Drive belt (Tension, Damage)	
2. Check functioning of Recirculating flap	
3. Check all Hose Joints	
4. Check Compressor Mounting Bolts	
5. Clean Condenser with low pressure water	
6. A/C filter element (Inspect)	
11. ROAD TEST	
1. Operation of Brakes, clutch Gear shifting and Speedometer	
2. Body & Chassis noise	

COST OF MATERIALS AND CONSUMABLES TO BE BORNE BY CUSTOMER

2ND. FREE INSPECTION COUPON

(DEALER'S COPY) *(5,000 KM or 6 MONTHS)*

Please see overleaf for special instructions

Model Code*	
Chassis No. :	
Engine No. :	
Mileage	
Date of Invoice	
Date of Inspection	
Registration No.	
Service Dealer/Mass Code	

Mechanic's Signature
Service Manager's Signature
Customer's Signature

MODEL CODE :** VITARA BREZZA - **ALK413D

Stamp of Selling dealer (Code & Full Address)

Model Code*								
Chassis No. :								
Engine No. :								
Mileage								
Date of Invoice								
Date of Inspection								
Registration No.								
Service Dealer/Mass Code								

For Servicing Dealer/Mass

1.0 : Please fill up Model codes correctly.

2.0 : Please fill up Complete chasis No.

3.0 : Please fill up customer details i.e. Address and Telephone No. legibly and correctly for the latest owner.

For Selling Dealer

1.0 : Please send all Free Service Coupon to us once in a month after settlement of free service charges.

Mechanic's Signature
Service Manager's Signature
Customer's Signature

Service Division
Maruti Suzuki India Limited

3RD. FREE INSPECTION COUPON *(CUSTOMER'S COPY)* *(10,000 KM or 12 MONTHS)*

WHICHEVER COMES FIRST

JOB MARK: √ : Checked OK, A: Adjust, C: Clean, R: Replace or Change, L: Lubricate, T: Tighten, O:Rotate, I: Inspect and correct or replace If necessary.

	JOB
1. ENGINE	
1. Engine Coolant (Level, Leakage)	
2. Cooling System hoses & connections (Leakage, Damage)	
3. Engine oil & oil filter (Replace)	
4. Engine Mounting & Manifold Fixing (Loose , Damage)	
2. FUEL	
1. Air cleaner Filter element (Clean)	
2. Fuel Filter, Fuel tank cap, Fuel lines and connections (Leakage)	
3. Fuel filter & water draining	
3. CLUTCH AND TRANSMISSION	
1. Clutch slipping (Dragging, Damage)	
2. Transaxle Oil (Level Leakage)	
3. Gear Shifter Cables (Operation)	
4. Drive shaft boots (Damage)	
5. Clutch Fluid (Level, Leakage) (Diesel)	
4. BRAKE	
1. Brake fluid (Level, Leakage)	
2. Brake pedal (Pedal to carpet clearance)	
3. Parking brake lever (Play)	
4. Brake Disc & Pads (Inspect)	
5. Brake hoses & pipes (Leakage, Damage)	
6. Brake Drums & Shoes (Inspect)	
5. WHEEL	
1. Tyres (Air pressure, Abnormal wear, Rotation)	
2. Wheels (Inspect)	
3. Front/Rear Wheel Bearings (Loose,Damage)	

	JOB
6. FRONT AND REAR SUSPENSION	
1. Suspension strut/shock absorber(Oil Leakage)	
2. Suspension arms, Knuckle, Rear spring (Damage, Loose)	
3. All Nuts & Bolts (Tighten)	
7. STEERING	
1. Steering wheel (Play)	
2. All Rods & Arms (Loose, Damage, Wear)	
3. Power Steering System (Operation)	
4. Steering gear box (Inspect)	
5. Tilt steering (operation) (if equipped)	
8. ELECTRICAL	
1. Battery electrolyte (Level, Leakage)	
2. Lighting system/Horn (Operation)	
3. Wiring Harness Connections (Looseness)	
4. AUX/ USB/ Accessory Socket (Operation)	
5. Wiper (Operation)	
9. BODY	
1. All Latches, Hinges & Locks/Central Locking (Operation, Lubrication)	
2. All Chassis nuts & bolts (Tighten)	
10. HEATING AND AIR CONDITIONING	
1. Drive belt (Tension, Damage)	
2. Check functioning of Recirculating flap	
3. Check all Hose Joints	
4. Check Compressor Mounting Bolts	
5. Clean Condenser with low pressure water	
6. A/C filter element (Inspect)	
11. ROAD TEST	
1. Operation of Brakes, Clutch, Gear shifting and Speedometer	
2. Body & Chassis noise	

COST OF MATERIALS AND CONSUMABLES TO BE BORNE BY CUSTOMER

3RD. FREE INSPECTION COUPON

(DEALER'S COPY) *(10,000 KM or 12 MONTHS)*

Please see overleaf for special instructions

Model Code*	
Chassis No. :	
Engine No. :	
Mileage	
Date of Invoice	
Date of Inspection	
Registration No.	
Service Dealer/Mass Code	

Mechanic's Signature

Service Manager's Signature

Customer's Signature

MODEL CODES :** VITARA BREZZA - **ALK413D

Stamp of Selling dealer (Code & Full Address)

Model Code*								
Chassis No. :								
Engine No. :								
Mileage								
Date of Invoice								
Date of Inspection								
Registration No.								
Service Dealer/Mass Code								

For Servicing Dealer/Mass

1.0 : Please fill up Model codes correctly.

2.0 : Please fill up Complete chasis No.

3.0 : Please fill up customer details i.e. Address and Telephone No. legibly and correctly for the latest owner.

For Selling Dealer

1.0 : Please send all Free Service Coupon to us once in a month after settlement of free service charges.

Mechanic's Signature
Service Manager's Signature
Customer's Signature

Service Division
Maruti Suzuki India Limited

FOREWORD

This manual is an essential part of your vehicle and should remain with the vehicle when resold or otherwise transferred to a new owner or operator. Please read this manual carefully before operating your new MARUTI SUZUKI and review the manual from time to time. It contains important information on safety, operation and maintenance. You are invited to avail the three Free Inspection Services as described in the manual. Three free inspection coupons are attached to this manual. Please show this manual to your dealer while you take your MARUTI SUZUKI for any Service.

To prolong the life of your vehicle and reduce maintenance cost, the periodic maintenance must be carried out according to “PERIODIC MAINTENANCE SCHEDULE” described in “INSPECTION AND MAINTENANCE” section of this manual. It is essential for preventing trouble and accidents to ensure your satisfaction and safety.

Daily inspection and care as per “DAILY INSPECTION CHECKLIST” described in the “INSPECTION AND MAINTENANCE” section of this manual is essential for prolonging the life of the vehicle and for safe driving.

MARUTI SUZUKI INDIA LIMITED believes in conservation and protection of Earth’s natural resources.

To that end, we encourage every vehicle owner to recycle, trade-in or properly dispose of, as appropriate, used Engine Oil, coolant and other fluids, batteries and tyres etc.

MARUTI SUZUKI INDIA LIMITED

All information in this manual is based on the latest product information available at the time of publication. Due to improvements or other changes, there may be discrepancies between information in this manual and your vehicle. MARUTI SUZUKI INDIA LIMITED reserves the right to make production changes at any time, without notice and without incurring any obligation to make the same or similar changes to vehicles previously built or sold.

This vehicle may not comply with standards or regulations of other countries. Before attempting to register this vehicle in any other country, check all applicable regulations and make any necessary modifications.

IMPORTANT

⚠ WARNING/ ⚠ CAUTION/*NOTICE*/ *NOTE*

Please read this manual and follow its instructions carefully. To emphasize special information, the symbol and the words **WARNING**, **CAUTION**, ***NOTICE*** and *NOTE* have special meanings. Pay particular attention to messages highlighted by these signal words:

⚠ WARNING

Indicates a potential hazard that could result in death or serious injury.

⚠ CAUTION

Indicates a potential hazard that could result in minor or moderate injury.

NOTICE

Indicates a potential hazard that could result in vehicle damage.

NOTE:
Indicates special information to make maintenance easier or instructions clearer.

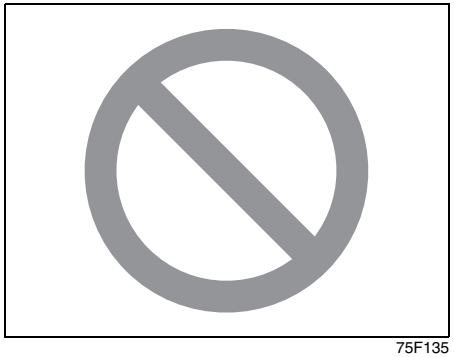

75F135

The circle with a slash in this manual means “Don’t do this” or “Don’t let this happen”.

MODIFICATION WARNING

⚠ WARNING

Do not modify your vehicle. Modification could adversely affect safety, handling, performance, or durability and may violate governmental regulations. In addition, damage or performance problems resulting from modification may not be covered under warranty.

NOTICE

Improper installation of mobile communication equipment such as cellular telephones, CB (Citizen’s Band) radios or any other wireless transmitters may cause electronic interference with your vehicle’s ignition system, resulting in vehicle performance problems. Consult your authorised Maruti Suzuki workshop or qualified service technician for advice.

NOTICE

Severe damage may be caused by the use of either poor quality fuel and/or lubricants not recommended by MARUTI SUZUKI.

WARRANTY POLICY

Maruti Suzuki India Limited (hereinafter called “Maruti Suzuki”), warrants that each new Maruti Suzuki vehicle distributed in India by Maruti Suzuki and sold by an authorised Maruti Suzuki dealer will be free, under normal use and service, from any defects in material and workmanship at the time of manufacture SUBJECT TO THE FOLLOWING TERMS AND CONDITIONS:

(1) Qualification:

To qualify for this warranty the vehicle must be delivered by a Maruti Suzuki authorised dealer and set-up, and serviced by a Maruti Suzuki authorised dealer / service station.

(2) Term:

The term of the warranty shall be twenty-four (24) months or 40,000 kilometers (whichever occurs first) from the date of invoice to the first owner.

(3) Maruti Suzuki Warranty Obligation:

If any defect(s) should be found in a Maruti Suzuki vehicle within the term stipulated above, Maruti Suzuki’s only obligation is to repair or replace at its sole discretion any part shown to be defective, with a new part or the equivalent at no cost to the owner for parts or labour, when Maruti Suzuki acknowledges that such a defect is attributable to faulty material or workmanship at the time of manufacture. The owner is responsible for any repair or replacements which are not covered by this warranty.

(4) Limitation:

This warranty shall not apply to:

(a) Normal maintenance service required other than the three free services, including without limitation, oil and fluid changes, headlight aiming, fastener retightening, wheel balancing, wheel alignment and tyre rotation, cleaning of injectors, adjustments of clutch and valve clearance.
(b) The replacement of normal wear parts including without limitation, bulbs, tyres and tubes, spark plugs, belts, hoses, filters, wiper blades, brushes, contact points, fuses, clutch disc, brake shoes, brake pads, cable and all rubber parts (except oil seal and glass run).
(c) Any vehicle which has been used for competition or racing.
(d) Any repairs or replacement required as a result of accidents or collision.
(e) Any defects caused by misuse, negligence, abnormal use or insufficient care.
(f) Any vehicle which has been modified or altered, including without limitation, the installation of performance accessories.
(g) Any vehicle on which parts or accessories not approved by Maruti Suzuki have been used.
(h) Any vehicle which has not been operated in accordance with the operating instructions in this Owner’s Manual and Service Booklet.
(i) Any vehicle which has not received, during the warranty term, the service inspections prescribed in this Owner’s Manual and Service Booklet.
(j) Any vehicle which has been assembled, disassembled, adjusted or repaired by other than an Maruti Suzuki authorised dealer/service station.
(k) Any vehicle which has been used for purposes other than what it was designed for.
(l) Any damage or deterioration caused by industrial pollution and bird droppings.

(m) Insignificant defects which do not affect the function of the vehicle including without limitation, sound, vibration and fluid seep.
(n) Any natural wear and tear including without limitation, aging etc.
(o) Installation and usage of domestic LPG gas/LPG Cylinder.
(p) V-belts, hoses and gas leaks.
(q) Any vehicle retrofitted with LPG/CNG kits.

(5) Extent of Warranty:
This warranty is the entire written warranty given by Maruti Suzuki for Maruti Suzuki vehicles and no dealer or its or his agent or employee is authorised to extend or enlarge this warranty and no dealer or its or his agent or employee is authorised to make any oral warranty on Maruti Suzuki's behalf.
Maruti Suzuki reserves the right to add any improvements or change the design of any model at any time with no obligation to make the same changes on units previously sold.

(6) Warranty Service:
To obtain warranty service, the complete vehicle must be presented at the owner's expenses to any authorised Maruti Suzuki workshop.

(7) Owner's Warranty Responsibilities:
It is responsibility of each owner to:
- Make certain that the PDI card was completed at the time of delivery of the vehicle;
- Have performed, at his own expenses, by an Maruti Suzuki authorised dealer/service station all the service inspections specified in the Maruti Suzuki "Owner's Manual and Service Booklet and maintain adequate proof that such service inspections have been performed.
- Make certain that the Maruti Suzuki authorised dealer/service station performing the service inspection has certified the work on the "Maintenance Service Record" page in the "Owner's Manual and Service Booklet and
- Present the Maruti Suzuki "Owner's Manual and Service Booklet to the authorised Maruti Suzuki dealer whenever requesting service inspections or warranty service.

If the "Owner's Manual and Service Booklet should be lost or destroyed the owner should consult the authorised Maruti Suzuki dealer from whom the vehicle was purchased for instructions concerning replacement of the "Owner's Manual and Service Booklet".

(8) Disclaimer of Consequential Damage:
Maruti Suzuki assumes no responsibility for loss of vehicle, loss of time, inconvenience or any other indirect incidental or consequential damage resulting from the vehicle not being available to the owner because of any defect covered by this warranty.

(9) Change of Owner
Even if ownership of the vehicle changes, the remaining warranty period is effective for the new owner.

EMISSION WARRANTY POLICY

Maruti Suzuki offers the Emission Warranty on all Maruti Suzuki vehicles (apart from the Regular Warranty and will run parallel to the regular product warranty) only in four metropolitan cities **(New Delhi, Kolkata, Mumbai and Chennai)** with effect from July 1st, 2001.

Terms:

The Emission Warranty will be applicable for **80,000 kms or 3 years** (Whichever comes earlier) from the date of invoice to the first owner. The remaining warranty terms will be valid in case of any change in ownership provided the production of all valid documents.

Conditions:

1. Under Emission Warranty, Warranty claims will be admitted for a prima facie examination, in case vehicle fails to meet the Emission Standard as specified in sub rule (2) of rule no. 115 of Central Motor Vehicles Rules (CMVR), 1989.
2. The warranty claims will only be accepted after examination carried out by Maruti Suzuki or it's dealer which leads to firm conclusions that the
   a) Original settings have not been tampered in any case.
   b) Part (as given in Annexure - A) has a manufacturing defect.
   c) Vehicle is unable to meet the Emission Standards (as given in 1.), inspite of the vehicle having been maintained and used in accordance with the instructions as specified in Owner's Manual and Service Booklet and the used fuel and different oils (Engine oil, Transmission oil, Brake oil etc.) are also as per specification.
3. The method of examination for deciding the warranty of the parts will be at the sole discretion of Maruti Suzuki and it's dealer and results of the examination will be final and binding. If after examination, the warrantable condition is not established, Maruti Suzuki and it's dealer has the right to charge all, or part of the cost of such examination.
4. Under Emission Warranty, the parts (as given in Annexure - A) will be changed free of cost, but the consumables will be charged as per actual.
5. If the part covered under Emission Warranty or the associated parts, are not independently replaceable, on account of these being integral parts of a complete assembly, Maruti Suzuki and it's dealer will have the sole discretion to replace either the entire assembly or by using some of the parts of the system through suitable repairs or modifications.
6. Any consequential repairs or replacement of parts which may be found necessary to establish compliance of Emission Warranty, will not be considered under warranty, unless the same is under product warranty. The consumable will be charged as per actual under such repair or replacement.
7. Maruti Suzuki will not be responsible for the cost of transportation of the vehicle to the nearest Maruti Suzuki dealer workshop or any loss due to non-availability of the vehicle during the period of lodging of a warranty claim and examination and/or repair by Maruti Suzuki dealer.
8. Maruti Suzuki will not be responsible for any penalty that may be charged by statutory authorities on account of failure to comply with the EMISSION STANDARDS.
9. Emission Warranty will not be affected on the change of owner, provided all the documents are available.

10. All maintenance actions (as specified in the Owner's Manual and Service Booklet) need to be followed and recorded in the manual for emission warranty.
11. The customer needs to produce the PUC (Pollution Under Control) certificate valid for the period preceding the test during which the failure is discovered. The receipts (for the maintenance of the vehicle as per specification in Owner's Manual and Service Booklet from the date of original purchase of the vehicle) will also be required.

Conditions under which the Emission Warranty is not APPLICABLE

1. In the absence of valid PUC certificate.
2. Vehicle not serviced from Maruti Suzuki authorised workshop as per the schedule specified in this Owner's Manual and Service Booklet.
3. Vehicle subjected to abnormal use (accident, motor race, rallies or for the purpose of establishing the records etc).
4. Use of non MGP (Maruti Genuine Part).
5. Vehicle that has been tampered with.
6. Tampering with odometer so that the actual kilometer reading can not be determined.
7. Use of adulterated fuel and/or unspecified oils (Engine oil, Transmission oil and Brake oil etc).

Annexure - A

List of parts covered under Emission Warranty

1. Fuel Injection Assembly, Pressure Regulator, Throttle Body Assembly
2. Electronic Control Module (ECM).
3. Intake Manifold.
4. EGR valve.
5. Ignition Coil.
6. Canister Assembly.
7. Vapour Liquid Seperator.
8. Fuel Tank and Filler Cap.
9. PCV (Positive Crankcase Ventilation) Valve.
10. Oil Filler Cap.
11. Catalytic Convertor.
12. Exhaust Manifold.
13. All Fuel Injection System related SENSORS.
14. High Pressure Fuel Pump.
15. Glow Plug.
16. Glow Plug Controller.

TABLE OF CONTENTS

FUEL RECOMMENDATION	1
BEFORE DRIVING	2
OPERATING YOUR VEHICLE	3
DRIVING TIPS	4
OTHER CONTROLS AND EQUIPMENT	5
VEHICLE LOADING AND TOWING	6
INSPECTION AND MAINTENANCE	7
EMERGENCY SERVICE	8
APPEARANCE CARE	9
GENERAL INFORMATION	10
SPECIFICATIONS	11
SERVICE NETWORK	12

FUEL RECOMMENDATION

Fuel Recommendation 1-1

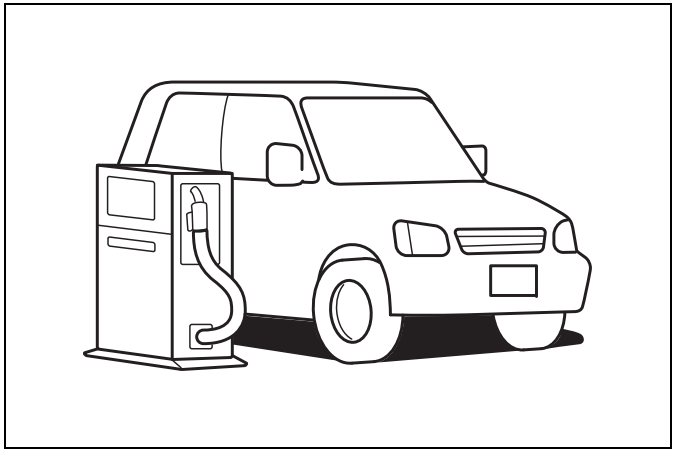

65D394

Fuel Recommendation

You must use diesel fuel with Cetane Number (CN) higher than 51 and sulphur content less than 50 ppm (parts per million). MARUTI SUZUKI recommends to use the diesel fuel conformable to EN590. Do not use marine diesel fuel, heating oils and so forth.

NOTICE

The fuel tank has an air space to allow for fuel expansion in hot weather. If you continue to add fuel after the filler nozzle has automatically shut off or an initial blowback occurs, the air chamber will become full. Exposure to heat when fully fuelled in this manner will result in leakage due to fuel expansion. To prevent such fuel leakage, stop filling after the filler nozzle has automatically shut off, or when using an alternative non-automatic system, initial vent blowback occurs.

NOTICE

Be careful not to spill fuel containing alcohol while refueling. If fuel is spilled on the vehicle body, wipe it up immediately. Fuels containing alcohol can cause paint damage, which is not covered under the New Vehicle Warranty.

BEFORE DRIVING

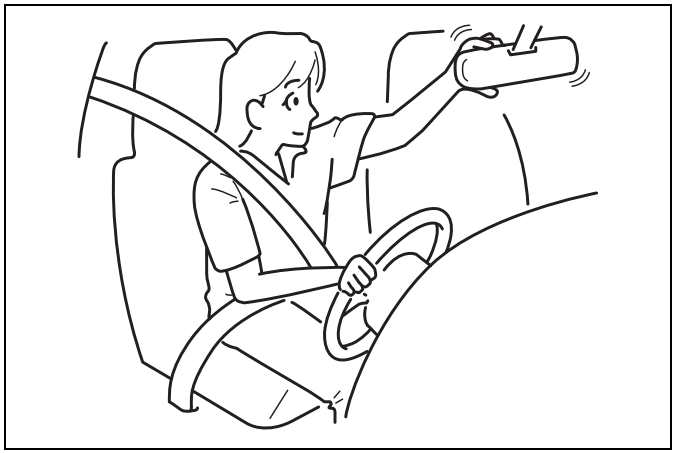

60MHM2T001

Keys 2-1
Door Locks 2-2
Keyless Push Start System Remote Controller/
Keyless Entry System Transmitter (if equipped) 2-6
Security System (if equipped) 2-15
Windows 2-17
Mirrors 2-20
Front Seats 2-21
Rear Seats 2-23
Seat Belts and Child Restraint Systems 2-26
Supplemental Restraint System (air bags) 2-39
Instrument Cluster 2-46
Speedometer 2-47
Tachometer 2-47
Fuel Gauge 2-47
Temperature Gauge 2-48
Brightness Control 2-48
Multi-Colour Illumination Display 2-49
Information Display 2-49
Warning and Indicator Lights 2-58
Lighting Control Lever 2-65
Front Fog Light Switch (if equipped) 2-69
Headlight Leveling Switch 2-70
Turn Signal Control Lever 2-70
Hazard Warning Switch 2-71
Windshield Wiper and Washer Lever 2-71
Tilt Steering Lock Lever 2-75
Horn 2-75
Heated Rear Window Switch (if equipped) 2-76

Keys

EXAMPLE

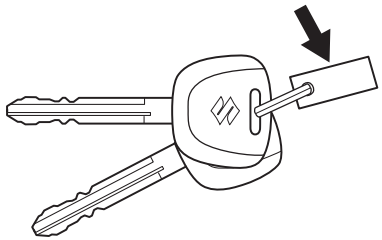

54G489

Your vehicle comes with a pair of keys. The key(s) may or may not be equipped with a transmitter depending on model variant. Keep the spare key in a safe place. One key can open all of the locks on the vehicle.

The key identification number is stamped on a metal tag provided with the keys or on the keys. Keep the tag (if equipped) in a safe place. If you lose your keys, you will need this number to have new keys made. Write the number below for your future reference.

KEY NUMBER:

Immobilizer System

This system is designed to help prevent vehicle theft by electronically disabling the engine starting system.

The engine can be started only with your vehicle's original immobilizer ignition key or keyless push start system remote controller which has an electronic identification code programmed into it. The key or remote controller communicates the identification code to the vehicle when the ignition switch is turned to the "ON" position or the engine switch is pressed to change the ignition mode to "ON". If you need to make spare keys or remote controllers, see your authorised Maruti Suzuki workshop. The vehicle must be programmed with the correct identification code for the spare. A key made by an ordinary locksmith will not work.

65D239

If the immobilizer system light blinks when the ignition switch is in the "ON" position or the ignition mode is "ON", the engine will not start.

For vehicles without keyless push start system

If this light blinks, turn the ignition switch to the "LOCK" position, then turn it back to the "ON" position.

If the light still blinks after the ignition switch is turned back to the "ON" position, there may be something wrong with your key or with the immobilizer system. Ask your authorised Maruti Suzuki workshop to have the system inspected.

For vehicles with keyless push start system

If this light blinks, change the ignition mode to "LOCK" (OFF), then change back to "ON". Also refer to "If the PUSH indicator light blinks and the engine cannot be started" in "Starting the Engine (Vehicle with Keyless Push Start System)" in the "OPERATING YOUR VEHICLE" section.

If the light still blinks after the ignition mode is changed back to "ON", there may be something wrong with your key or with the immobilizer system. Ask your authorised Maruti Suzuki workshop to have the system inspected.

The immobilizer system light may also blink if the remote controller is not in the vehicle when you close the door or attempt to start the engine.

NOTE:
- *If you lose your immobilizer ignition key or remote controller, see your* authorised Maruti Suzuki workshop *as soon as possible to have the lost one deactivated, then have the new key or remote controller made by them.*
- *If you own other vehicles with immobilizer keys, keep those keys away from the ignition switch or the engine switch when using your vehicle, or the engine may not start because they may interfere with your vehicle's immobilizer system.*
- *If you attach any metal objects to the immobilizer key or remote controller, it may not start the engine.*

NOTICE

The immobilizer key and remote controller are sensitive electronic instruments. To avoid damaging them:
- **Do not expose them to impacts, moisture or high temperature such as on the dashboard under direct sunlight.**
- **Keep them away from magnetic objects.**

Ignition Key Reminder
A buzzer sounds intermittently to remind you to remove the ignition key if it is in the ignition switch when the driver's door is opened.

Door Locks
Side Door Locks
Driver's door

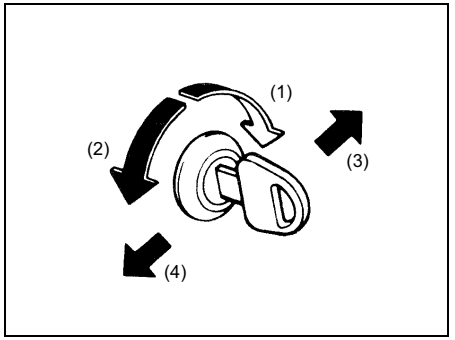

76MH0A001

(1) LOCK
(2) UNLOCK
(3) Front
(4) Rear

To lock a front door from outside the vehicle:
- Insert the key and turn the top of the key toward the front of the vehicle, or
- Turn the inside lock knob forward, then pull and hold the door handle as you close the door.

To unlock a driver's door from outside the vehicle, insert the key and turn the top of the key toward the rear of the vehicle.

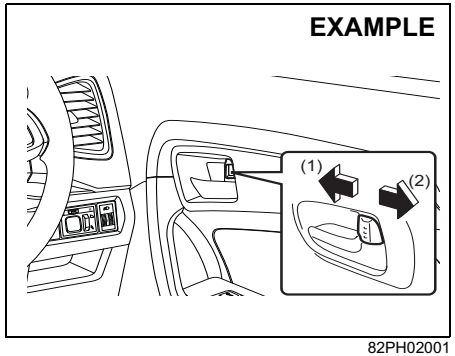

82PH02001

(1) LOCK
(2) UNLOCK

To lock a door from inside the vehicle, turn the lock knob forward. Turn the lock knob rearward to unlock the door.

To lock a rear door from outside the vehicle, turn the inside lock knob forward and close the door. You do not need to pull and hold the door handle as you close the door.

NOTE:
Be sure to hold the door handle when you close the front door to lock it, or the door will not lock.

Central Door Locking System

Driver's door

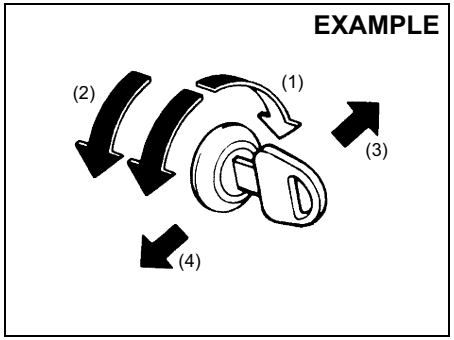

76MH0A002

(1) LOCK
(2) UNLOCK
(3) Front
(4) Rear

You can lock and unlock all doors (including the tailgate) simultaneously by using the key in the driver's door lock.

To lock all doors simultaneously, insert the key in the driver's door lock and turn the top of the key toward the front of the vehicle once.

To unlock all doors simultaneously, insert the key in a driver's door lock and turn the top of the key towards the rear of the vehicle twice.

NOTE:
You can switch the function that unlocks all doors from twice operations to once operation, and vice versa, via the setting mode of the information display. For details on how to use the information display, refer to "Information Display" in this section.

To unlock the driver's door only, insert the key in the door lock and turn the top of the key towards the rear of the vehicle once.

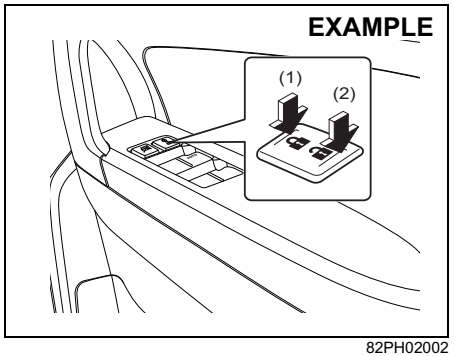

82PH02002

(1) LOCK
(2) UNLOCK

You can also lock or unlock all doors from inside by depressing the front or rear of the switch respectively on the drive side.

NOTE:
- *You can also lock or unlock all doors by operating the transmitter or remote controller. Refer to "Keyless Push Start System Remote Controller/Keyless Entry System Transmitter" in this section.*
- *If your vehicle is equipped with the keyless push start system, you can also lock or unlock all doors by pushing the request switch. Refer to "Keyless Push Start System Remote Controller/Keyless Entry System Transmitter" in this section.*

NOTE:
- *All doors are automatically unlocked when you turn the ignition switch to the "LOCK" position and pull out the key, or press the engine switch to change the ignition mode to "LOCK" (OFF).*
- *All doors are automatically locked for safety when the vehicle speed reaches 15 km/h.*
- *You can change the automatic locking or unlocking function mentioned above via the setting mode of the information display. For details on how to use the information display, refer to "Information Display" in this section.*

Child-Proof Locks (rear door)

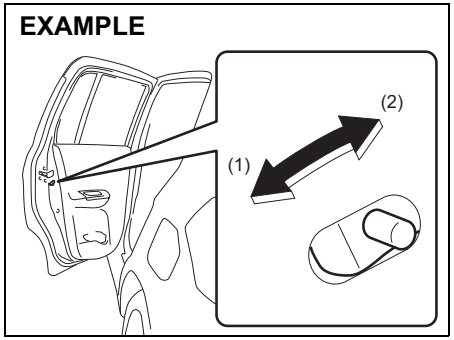

76MH0A021

(1) Lock positon
(2) Unlock position

Each of the rear doors is equipped with a child-proof lock which can be used to help prevent unwanted opening of the door from inside the vehicle. When the lock lever is in the lock position (1), the rear door can only be opened from outside. When the lock lever is in the unlock position (2), the rear door can be opened from inside or outside.

⚠ WARNING

Be sure to place the child-proof lock in the lock position whenever children are seated in the rear.

Tailgate

⚠ WARNING

Always make sure that the tailgate is closed and latched securely. Completely closing the tailgate helps prevent occupants from being thrown from the vehicle in the event of an accident. Completely closing it also helps to keep the exhaust gases from entering the vehicle.

Type 1

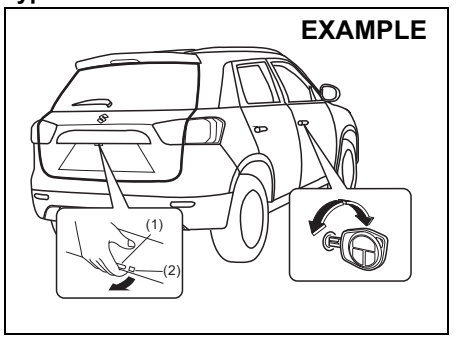

82PH02003

(1) Tailgate unlatch switch
(2) Request switch (if equipped)

Vehicle with keyless entry system
You can lock and unlock the tailgate by using the driver's door lock key.

To open the tailgate, push and hold the tailgate unlatch switch (1) and lift the tailgate.

(Vehicle with keyless push start system)
You can lock or unlock the tailgate by pushing the request switch (2), when the keyless push start system remote controller is within the switch's operating range. For details refer to "Keyless Push Start System Remote Controller/Keyless Entry System Transmitter" in this section.

To open the tailgate push the tail gate unlatch switch (1) and lift the tail gate to open the trunk lid.

The tail gate unlatch switch (1) operates only to open the tail gate.
When all the doors are closed and if the keyless push start remote controller is left in the trunk, the tail gate will be automatically unlatched.

NOTE:
When the tailgate is closed incompletely, follow the procedure below:
1) Push the tailgate unlatch switch (1) and open the tailgate.
2) After a few seconds, close the tailgate.
3) Make sure that the tailgate is closed completely.

If you cannot unlatch the tailgate by pushing the unlatch switch (1) due to a discharged battery or malfunction, follow the procedures below to unlatch the tailgate from inside the vehicle.

1) Remove the luggage compartment cover (if equipped) and fold the rear seat forward for easier access. Refer to "Folding Rear Seats" section for details on how to fold the rear seat forward.

EXAMPLE

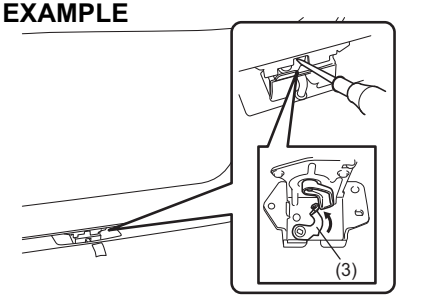

82PH02030

2) Push open the tailgate from inside by pushing up on the emergency lever (3) using a flat blade screwdriver or the jack handle. The tailgate will be latched again by closing the tailgate simply.

If the tailgate cannot be unlatched by pushing the unlatch switch (1), have the vehicle inspected by your authorised Maruti Suzuki workshop.

⚠ CAUTION

- **To avoid injury, do not use your finger to push the emergency lever.**
- **Make sure there is no one near the tailgate when pushing open the tailgate from inside the vehicle.**

Type 2

EXAMPLE

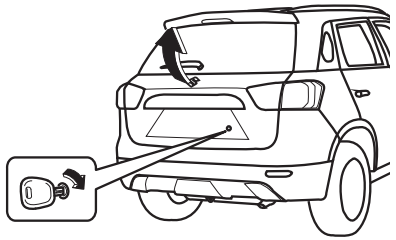

82PH02004

To open the tailgate, insert the key and turn it clockwise to unlatch and lift the tailgate.

NOTICE

Do not use the key to lift up the tailgate, or the key may break off in the lock.

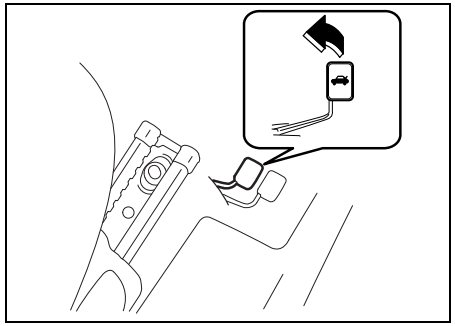

68KH003

You can also unlatch the tailgate by pulling the release lever located on the outboard side of the driver's seat.

Keyless Push Start System Remote Controller/ Keyless Entry System Transmitter (if equipped)

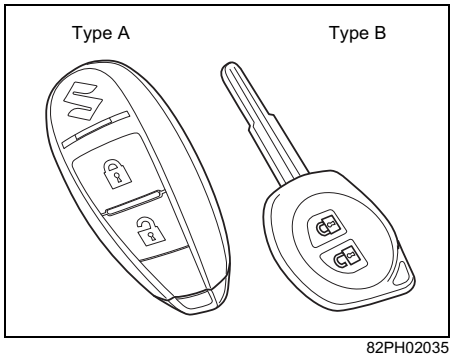

82PH02035

Your vehicle is equipped with either a keyless push start system remote controller (Type A) or a keyless entry system transmitter (Type B). The remote controller has a keyless entry system and a keyless push start system. The transmitter has only a keyless entry system. For details, refer to the following explanations.

⚠ WARNING

Radio waves from the keyless push start system antenna(s) may interfere with operation of electrical medical equipment such as pacemakers. Failure to take the precautions listed below can increase the risk of severe injury or death due to radio wave interference.

- **Anyone who uses electrical medical equipment such as a pacemaker should consult the medical equipment supplier or their medical advisor about whether radio waves from the antenna(s) can interfere with the medical equipment.**
- **If radio wave interference is a concern, then contact your authorised Maruti Suzuki workshop.**

Keyless Push Start System Remote Controller (Type A)

The remote controller enables the following operations:

- You can lock or unlock the doors by operating the lock/unlock buttons on the remote controller. Refer to the explanation in this section.
- You can lock or unlock the doors by pushing the request switch. For details, refer to the explanation in this section.
- You can start the engine without using an ignition key. For details, refer to “Engine Switch” in the “OPERATING YOUR VEHICLE” section.

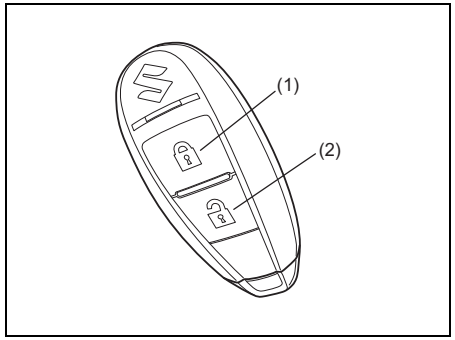

82PH02034

(1) Lock button
(2) Unlock button

You can lock or unlock all doors (including the tailgate) simultaneously by operating the remote controller near the vehicle.

Central door locking system

- To lock all doors, push the lock button (1) once.
- To unlock only the driver’s door, push the unlock button (2) once.
- To unlock other doors, push the unlock button (2) once again.

NOTE:
You can switch the function that unlocks all doors from twice operations to once operation, and vice versa, via the setting mode of the information display. For details on how to use the information display, refer to “Information Display” in this section.

The turn signal lights will flash once and the siren will sound once when the doors are locked.

When the doors are unlocked:

- The turn signal lights will flash twice and the siren will sound twice.
- If the interior light switch is in the door position, the interior light will turn on for about 15 seconds and then fade out. If you press the engine switch during this time, the light will start to fade out immediately.

Be sure the doors are locked after you operate the lock button (1).
If no door is opened within about 30 seconds after the unlock button (2) is operated, the doors will automatically lock again.

NOTE:

- *If you lock the doors using the remote controller when the engine hood is open, the siren will sound 3 times to remind you.*
- *If the security system was triggered due to an unauthorized entry into the vehicle and then you unlock the doors using the remote controller, the siren will sound 4 times to remind you. If this happens, check whether your vehicle has been broken into while you were away from it.*
- *If you push both the lock button (1) and unlock button (2) simultaneously, then you push any one of the buttons within 5 seconds, the siren will not sound. However, If you push one of the buttons twice within 5 seconds, or push one of the buttons 5 seconds later, the siren will sound.*
- *You can set whether the siren sounds when locking or unlocking the door(s) via the setting mode of the information display. For details on how to use the information display, refer to “Information Display” in this section.*

NOTE:
- *The maximum operating distance of the remote controller is about 5 m (16 ft.), but this can vary depending on the surroundings, especially near other transmitting devices such as radio towers or CB (Citizen's Band) radios.*
- *The door locks cannot be operated with the remote controller if the ignition mode is other than the "LOCK"(OFF).*
- *When any door is open, if you push the lock button on the remote controller, the exterior buzzer will sound and doors cannot be locked.*
- *If you lose one of the remote controllers, ask your authorised Maruti Suzuki workshop as soon as possible for a replacement. Be sure to have your dealer program the new remote controller code in your vehicle's memory so that the old code is erased.*

Car locator function

This function helps in locating the vehicle. Push both of the lock button (1) and unlock button (2) for more than 3 seconds. The turn signal lights will blink for about 27.5 seconds. Also, the siren will sound for about 27.5 seconds at the same time.

To cancel the car locator function, press any button (lock or unlock). You can also change the ignition mode to "ON" to cancel the car locator function.

NOTE:
The car locator function will not activate when the ignition mode is "ACC" or "ON" or pre warning / full blast warning by shock sensor or alarm is in activated condition.

Keyless unlocking/locking using the request switches

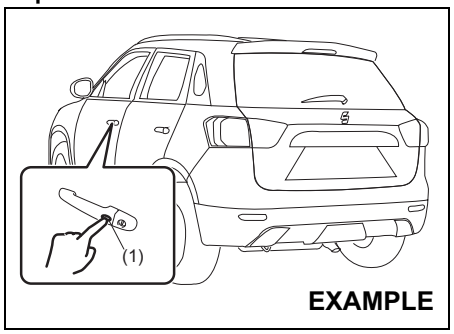

82PH02011

When the remote controller is within the operating range described in this section, you can lock or unlock the doors (including the tailgate) by pushing the request switch (1) on the driver's door handle, front passenger's door handle or tailgate.

To lock all doors when all doors are unlocked:
- To lock all doors, push one of the request switches once.

The turn signal lights will flash once and the siren will sound once when the doors are locked.

To unlock a door or all doors:
- Push one of the request switches once to unlock only one door.
- Push one of the request switches twice to unlock all doors.

NOTE:
You can switch the function that unlocks all doors from twice operations to once operation, and vice versa, via the setting mode of the information display. For details on how to use the information display, refer to "Information Display" in this section.

When the doors are unlocked:
- The turn signal lights will flash twice and the siren will sound twice.
- If the interior light switch is in the door position, the interior light will turn on for about 15 seconds and then fade out. If you press the engine switch during this time, the light will start to fade out immediately.

Be sure the doors are locked after you operate the request switch to lock the doors.

NOTE:
- *If you lock the doors using the request switch or the lock switch on the keyless push start system remote controller when the engine hood is open, the siren will sound 3 times to remind you.*

- *If the security system was triggered due to an unauthorized entry into the vehicle and then you unlock the doors using the request switch, the siren will sound 4 times to remind you. If this happens, check whether your vehicle has been broken into while you were away from it.*
- *You can set whether the siren sounds when locking or unlocking the door(s) via the setting mode of the information display. For details on how to use the information display, refer to "Information Display" in this section.*

NOTE:
- *The door locks cannot be operated by the request switch under the following conditions:*
  - *If any door is open or is not completely closed.*
  - *If the ignition mode is other than "LOCK" (OFF).*
- *If no doors are opened within about 30 seconds after unlocking the doors by pushing the request switch, the doors will be locked again automatically.*

NOTICE

- **Do not operate request switch with sharp metal object.**
- **Do not use high pressure water on request switch.**

EXAMPLE

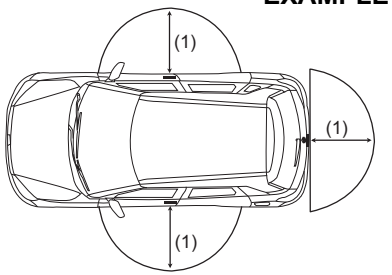

82PH02012

(1) 80 cm (2 1/2 feet)

When the remote controller is within approximately 80 cm (2 1/2 feet) from a front door handle or the tailgate switch, you can lock or unlock the doors by pushing the request switch.

NOTE:
- *If the remote controller is outside the request switch operating range described above, you will not be able to operate the request switch.*
- *If the battery of the remote controller runs down or there are strong radio waves or noise, the request switch operating range may be reduced or the remote controller may be inoperative.*
- *If the remote controller is too close to the door glass, the request switches may not operate.*
- *If a spare remote controller is in the vehicle, the request switches may not operate normally.*
- *The remote controller will only operate a request switch if it is within the switch's operating range. For example, if the remote controller is within the operating range of the driver's door request switch but not the front passenger's door request switch or the tailgate request switch, the driver's door switch can be operated but the front passenger's door switch or tailgate switch cannot be operated.*

NOTICE

The remote controller is a sensitive electronic instrument. To avoid damaging the remote controller:
- **Do not expose it to impacts, moisture or high temperature such as by leaving it on the dashboard under direct sunlight.**
- **Keep the remote controller away from magnetic objects such as a television.**

NOTE:
The keyless push start system may not function correctly in certain environments or under certain operating conditions such as the following:
- *When there are strong signals coming from a television, power station or a cellular phone.*
- *When the remote controller is in contact with or covered by a metal object.*
- *When a radio wave type remote keyless entry is used nearby.*
- *When the remote controller is placed near an electronic device such as personal computer.*

Some additional precautions you should take and information you should be aware of are:
- *Make sure the key is stowed in the remote controller. If the remote controller becomes unreliable, you will not be able to lock or unlock the doors.*
- *Be sure that the driver always carries the remote controller.*
- *If you lose one of the remote controllers, ask your authorised Maruti Suzuki workshop as soon as possible for a replacement. Be sure to have your dealer program the new remote controller code in your vehicle's memory so that the old code is erased.*
- *You can use up to four remote controllers and the keys for your vehicle. Ask your authorised Maruti Suzuki workshop for details.*
- *The battery life of the remote controller is about two years, but it can vary depending on usage conditions.*

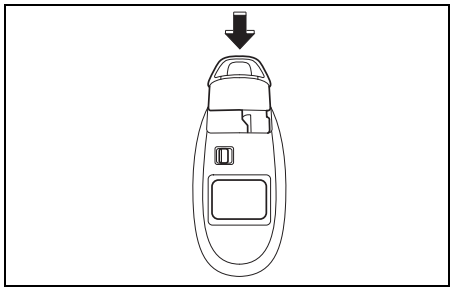

57L21016

To stow the key into the remote controller, push the key in the remote controller until you hear a click.

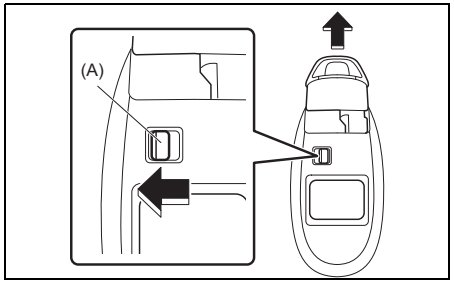

54P000263

To remove the key from the remote controller, push the button (A) in the direction of the arrow and pull the key out from the remote controller.

Request switch warning buzzer
This exterior buzzer beeps for about 2 seconds in the following conditions to warn you that the request switch will not working:
- The request switch is pressed after all doors are closed with the ignition mode changed to "ACC" or "ON" by pressing the engine switch when the controller is outside the vehicle.
- The request switch is pressed in any of the following conditions after changing the ignition mode to "LOCK" (OFF) by pressing the engine switch.
  – The remote controller is left inside the vehicle.
  – Any door (including the tailgate) is open.

Press the request switch again after doing the following:
With the ignition mode changed to "LOCK" (OFF) by pressing the engine switch, bring out the remote controller if it is inside the vehicle and check that all doors are completely closed.

Reminder function

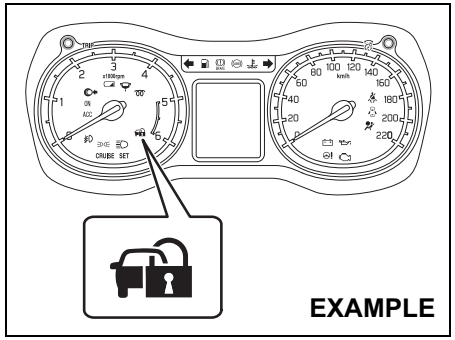

82PH019

If the remote controller is not in the vehicle, the buzzer sounds intermittently for about 2 seconds and the immobilizer system light on the instrument cluster blinks, under the following condition:

- When one or more doors are opened and all of the doors are later closed with the ignition mode is other than “LOCK”.

The immobilizer system light will turn off within several seconds after the remote controller is returned to an area of the vehicle other than the rear luggage area.

If the remote controller is left in the vehicle and you lock the driver’s door or front passenger’s door as described below, the door will be automatically unlocked.

- If you open the driver’s door and lock the door by turning the lock knob forward or pushing the power door locking switch, the driver’s door will be automatically unlocked.
- If you open the front passenger’s door and lock the door by turning the lock knob forward or pushing the power door locking switch, the front passenger’s door will be automatically unlocked.

NOTE:

- *The reminder function will not operate when the remote controller is on the instrument panel, in the glove box, in a storage compartment, in the sun visor or on the floor etc.*
- *Be sure that the driver always carries the remote controller.*
- *Do not leave the remote controller in the vehicle when leaving the vehicle.*

Replacement of the battery

If the remote controller becomes unreliable, replace the battery.

NOTICE
When replacing the battery, do not touch the electronic component in the remote controller with wet or oil-stained hands. Otherwise, the remote controller may be damaged.

To replace the battery of the remote controller:

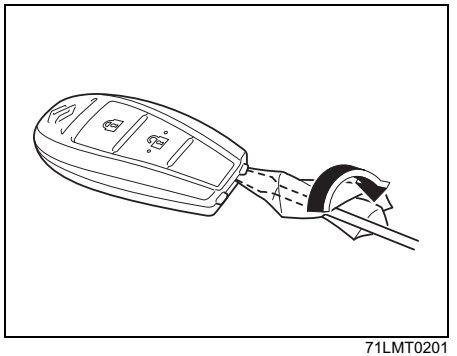

71LMT0201

1) Pull the key out from the remote controller.
2) Insert a flat blade screwdriver covered with a soft cloth in the slot of the remote controller and pry it open.

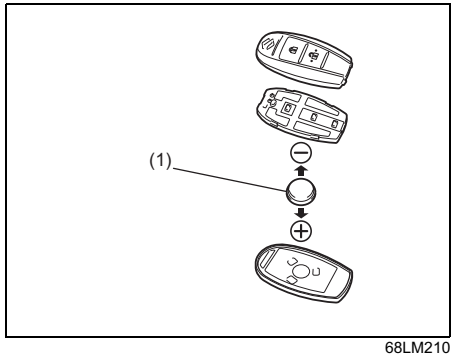

68LM210

(1) Lithium disc type battery:
CR2032 or equivalent

3) Replace the battery (1) so its + terminal faces the bottom of the case as shown in the illustration.
4) Close the remote controller firmly.
5) Make sure the door locks can be operated with the remote controller.
6) Dispose of the used battery properly according to applicable rules or regulations. Do not dispose of lithium batteries with ordinary household trash.

⚠ WARNING

Swallowing a lithium battery may cause serious internal injury. Do not allow anyone to swallow a lithium battery. Keep lithium batteries away from children and pets. If swallowed, contact a physician immediately.

NOTICE

The remote controller is a sensitive electronic instrument. To avoid damaging it, do not expose it to dust or moisture or tamper with internal parts.

NOTE:
Used batteries must be disposed properly according to applicable rules or regulations and must not be disposed with ordinary household trash.

Keyless Entry System Transmitter (Type B)

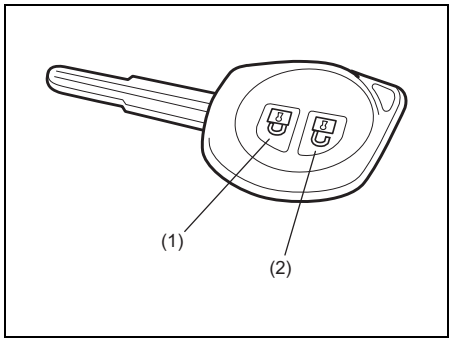

76MS011

(1) “LOCK” button
(2) “UNLOCK” button

You can lock or unlock all doors (including the tailgate) simultaneously by operating the transmitter near the vehicle.

Central door locking system
- To lock all doors, push the “LOCK” button (1) once.
- To unlock only the driver’s door, push the “UNLOCK” button (2) once.
- To unlock other doors, push the “UNLOCK” button (2) once again.

NOTE:
You can switch the function that unlocks all doors from twice operations to once operation, and vice versa, via the setting mode of the information display. For details on how to use the information display, refer to "Information Display" in this section.

The turn signal lights will flash once and the siren will sound once when the doors are locked.

When the doors are unlocked:
- The turn signal lights will flash twice and the siren will sound twice.
- If the interior light switch is in the DOOR position, the interior light will turn on for about 15 seconds and then fade out. If you insert the key into the ignition switch during this time, the light will start to fade out immediately.

Be sure the doors are locked after you operate the lock button (1).

NOTE:
If no door is opened within about 30 seconds after the unlock button (2) is operated, the doors will automatically lock again.

NOTE:
- *If you lock the doors using the transmitter when the engine hood is open, the siren will sound 3 times to remind you.*
- *If the security system was triggered due to an unauthorized entry into the vehicle and then you unlock the doors using the transmitter, the siren will sound 4 times to remind you. If this happens, check whether your vehicle has been broken into while you were away from it.*
- *Once you push both of the "LOCK" button (1) and "UNLOCK" button (2), then you push one of the buttons within 5 seconds, the siren will not sound. However, If you push one of the buttons twice within 5 seconds, or push one of the buttons 5 seconds later, the siren will sound.*
- *You can set whether the siren sounds when locking or unlocking the door(s) via the setting mode of the information display. For details on how to use the information display, refer to "Information Display" in this section.*

NOTE:
- *The maximum operating distance of the keyless entry system transmitter is about 5 m (16 ft.), but this can vary depending on the surroundings, especially near other transmitting devices such as radio towers or CB (Citizen's Band) radios.*
- *The door locks cannot be operated with the transmitter, if the ignition key is inserted in the ignition switch.*
- *When any door is open, the door locks can be operated only by unlocking with the transmitter. With this unlocking operation, the turn signal lights will flash twice and the siren will sound twice.*
- *If you lose one of the transmitters, ask your authorised Maruti Suzuki workshop as soon as possible for a replacement. Be sure to have your dealer program the new transmitter code in your vehicle's memory so that the old code is erased.*

NOTICE
The transmitter is a sensitive electronic instrument. To avoid damaging the transmitter: **• Do not expose it to impacts, moisture or high temperature such as by leaving it on the dashboard under direct sunlight.** **• Keep the transmitter away from magnetic objects such as a television.**

Car locator function
This function helps in locating the vehicle.
Push both of the "LOCK" button (1) and "UNLOCK" button (2) for more than 3 seconds. The turn signal lights will blink for about 27.5 seconds. Also, the siren will sound for about 27.5 seconds at the same time.
To cancel the car locator function, press any button ("LOCK" or "UNLOCK"). You can also turn the ignition switch to the "ON" position to cancel the car locator function.

NOTE:
The car locator function will not activate when the key is in the ignition switch or pre warning / full blast warning by shock sensor or alarm is in activated condition.

Replacement of the battery
If the transmitter becomes unreliable, replace the battery.

NOTICE
When replacing the battery, do not touch the electronic component in the transmitter with wet or oil-stained hands. Otherwise, the transmitter may be damaged.

To replace the battery of the transmitter:

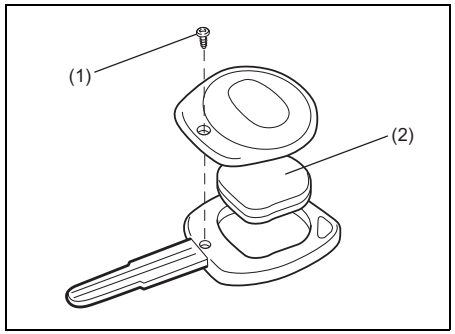

68LM248

1) Remove the screw (1), and open the transmitter cover.
2) Remove the transmitter (2).

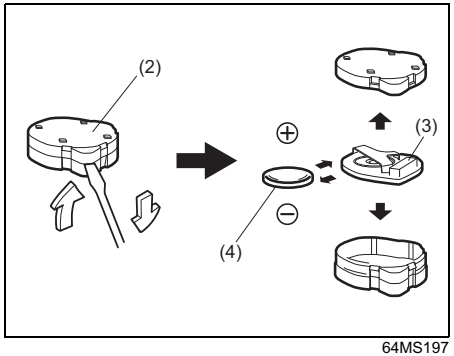

64MS197

(4) Lithium disc type battery:
CR1620 or equivalent

3) Put the edge of a flat blade screwdriver in the slot of the transmitter (2) and pry it open.
4) Hold the cover around the electric component (3), insert a precision screwdriver covered with insulating tape in the space between the cover and the component, and then remove the component.
5) Replace the battery (4) so its + terminal faces the "**+**" mark of the transmitter. Insert the battery all the way into the holder.
6) Close the transmitter and install it into the transmitter holder.
7) Close the transmitter cover, install and tighten the screw (1).
8) Make sure the door locks can be operated with the transmitter.
9) Dispose of the used battery properly according to applicable rules or regulations. Do not dispose of lithium batteries with ordinary household trash.

⚠ WARNING
Swallowing a lithium battery may cause serious internal injury. Do not allow anyone to swallow a lithium battery. Keep lithium batteries away from children and pets. If swallowed, contact a physician immediately.

NOTICE
The transmitter is a sensitive electronic instrument. To avoid damaging it, do not expose it to dust or moisture or tamper with internal parts.

NOTE:
Used batteries must be disposed properly according to applicable rules or regulations and must not be disposed with ordinary household trash.

Security System (if equipped)

The security system is armed after you lock all doors (including the engine hood and tailgate) by using the keyless entry system transmitter, keyless push start system remote controller or request switch.
Once the system is armed, any attempt to open a door by using any other means (*) than the keyless entry system transmitter, keyless push start system remote controller or request switch, or open the engine hood, will cause the alarm to be triggered.
* These means include the following:
  – The key
  – The lock knob on a door
  – The central door locking switch

Also, in case that you have set the shock sensor to enabled state and set sensitivity of the pre-warning function and full blast warning function to a level other than 0, the warning will be triggered in case of any attempt to tamper with the vehicle. The shock sensor can be selected to enabled or disabled state, and sensitivity of each warning can be adjusted as desired. To set the shock sensor, ask your authorised Maruti Suzuki workshop or use the setting mode of the information display.

NOTE:
- *The default setting of the shock sensor is in the disabled state. Set to the enabled state and adjust sensitivity of each warning according to your preference. For details on how to use the information display, refer to "Information Display" in this section.*
- *Your dealer may have already set the shock sensor of the vehicle to the enabled state before you purchase it. Consult your dealer for further information.*

NOTE:
- *The security system generates alarms when any of the predetermined conditions is met. However, the system does not have any function of blocking unauthorized entry into the vehicle.*
- *Always use the keyless entry system transmitter, keyless push start system remote controller or request switch to unlock the doors when the security system has been armed. Using a key instead will trigger the alarm.*
- *If a person who does not know the security system is going to drive the vehicle, we recommend you explain the system and its operation to the person. Mistakenly triggering the alarm may cause a nuisance to others.*
- *Even if the security system is armed, you should still be careful to guard against theft. Do not leave money or things of value in the vehicle.*

How to arm the security system
Lock all doors (including the engine hood and tailgate) using the keyless entry system transmitter, keyless push start system remote controller or request switch.
Once the system is armed, the security system indicator (1) continues to blink at intervals of approximately 2 seconds.

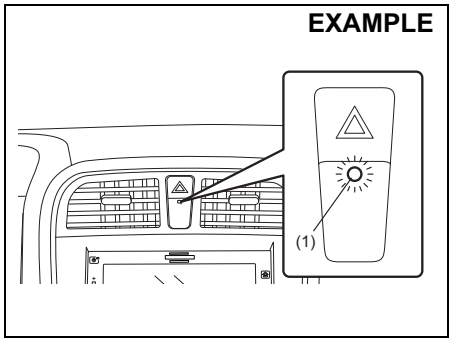

82PH02016

NOTE:
- *To prevent the alarm from being accidentally triggered, avoid arming it while anyone remains inside the vehicle. The alarm will be triggered if any person inside opens the door, tailgate, engine hood, or warning will be triggered if swings the vehicle (if the shock sensor is in enabled state).*
- *The security system is not armed when all doors are locked using the key from outside, or using the door lock knobs or*

the central door locking switch from inside.

- *If any door is not operated within approximately 30 seconds after the doors have been unlocked using the keyless entry system transmitter, keyless push start system remote controller or request switch, the doors are automatically locked again. When the doors are locked, the security system will be armed.*
- *If the security system indicator (1) blinks when the ignition switch is in the "ON" position or the ignition mode is "ON", there may be something wrong with the security system. Ask your authorised Maruti Suzuki workshop to inspect the system.*

How to disarm the security system

Simply unlock the doors using the keyless entry system transmitter, keyless push start system remote controller or request switch. The security system indicator will go out, indicating that the security system is disarmed.

How to stop the alarm

Should the alarm be triggered accidentally, unlock the doors using the keyless entry system transmitter, keyless push start system remote controller or request switch or in case of emergency, insert the key in the ignition switch and turn it to "ON" position, or press the engine switch to change the ignition mode to "ON". The alarm will then stop.

NOTE:

- *Even after the alarm has stopped, if you lock the doors using the keyless entry system transmitter, keyless push start system remote controller or request switch, the security system will be rearmed.*
- *If you disconnect the battery while the security system is in the armed condition or the alarm is actually in operation, the alarm will be re-triggered when the battery is then reconnected.*
- *Even after the alarm has stopped at the end of the predetermined operation time, it will be triggered again if any of the doors, tailgate or engine hood is opened, or the warning may be triggered if the vehicle feels a shock (if the shock sensor is in the enabled state), without disarming the security system.*

Checking whether the alarm has been triggered during parking

If the alarm was triggered and you then turn the ignition switch to "ON" position, or press the engine switch to change the ignition mode to "ON", the security system indicator will blink rapidly for about 8 seconds and a buzzer will beep 4 times during this period. If this happens, check whether the vehicle has been broken into while you were away from it.

Security system indication

- If any of the doors are opened without unlocking by the keyless entry system transmitter, keyless push start system remote controller or request switch, all turn signal lights start to blink and the interior buzzer beeps intermittently. After 5 seconds, the siren will sound for about 27.5 seconds. The security system indicator continues to blink during this time.
- If the engine hood is opened, all turn signal lights blink, and the siren sounds for about 27.5 seconds. The security system indicator continues to blink during this time.
- If the shock sensor is in the enabled state and the vehicle feels a shock, the siren sounds for about 2 seconds (pre-warning). If the vehicle continues to feel a shock, the siren will sound for about 4.5 seconds (full blast warning). The security system indicator continues to blink during this time.

NOTE:

If you set the full blast warning sensitivity higher than the pre-warning sensitivity in the setting mode of the information display, or the vehicle feels such shock as to be able to trigger the full blast warning, the full blast warning will be triggered preferentially. In this case, the pre-warning will not be triggered.

Windows

Manual Window Control (if equipped)

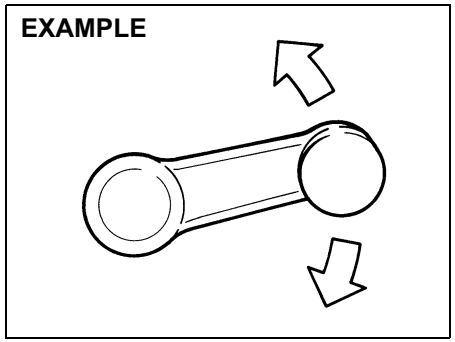

60G010

Raise or lower the door windows by turning the handle located on the door panel.

Electric Window Controls (if equipped)

The electric windows can only be operated when the ignition switch is in the “ON” position or the ignition mode is “ON”.

Driver’s door (Type A)

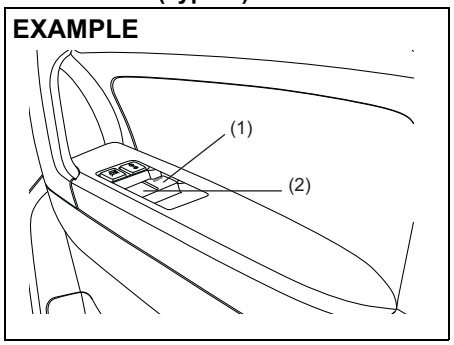

82PH02028

Driver’s door (Type B)

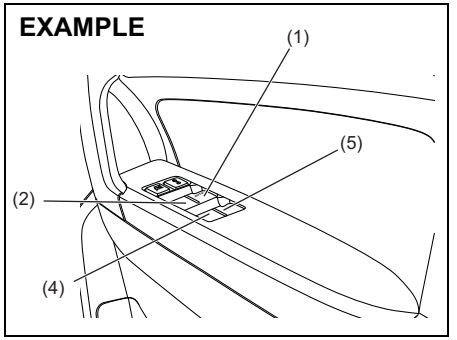

82PH02007

The driver’s door has a switch (1) to operate the driver’s window, and a switch (2) to operate the front passenger’s window or there are switches (4), (5), to operate the rear left and right passenger windows, respectively.

Passenger's door

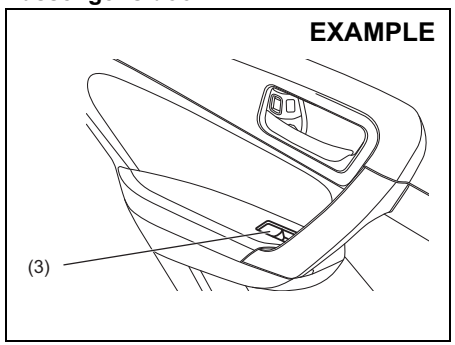

82PH02013

The passenger's door has a switch (3) to operate that passenger's window.

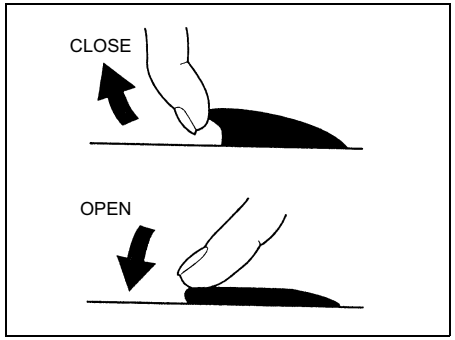

81A009

To open a window, push the top part of the switch and to close the window, lift up the top part of the switch.

The driver's window has auto-down feature and auto-up feature (if equipped) for added convenience (at toll booths or drive-through restaurants, for example). This means the driver can open or close the window without holding the window switch in the down or up position. Press down or lift up the driver's window switch completely and release it. To stop the window before it reaches the full-down or full-up position, pull up or push down the switch briefly.

Lock switch (Type A)

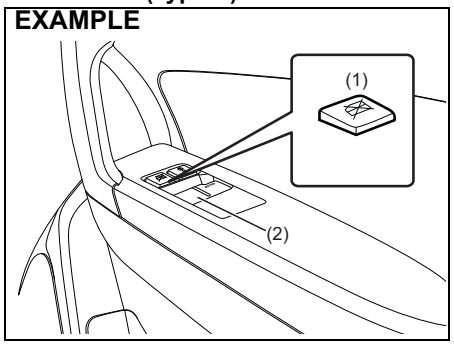

82PH02027

Lock switch (Type B)

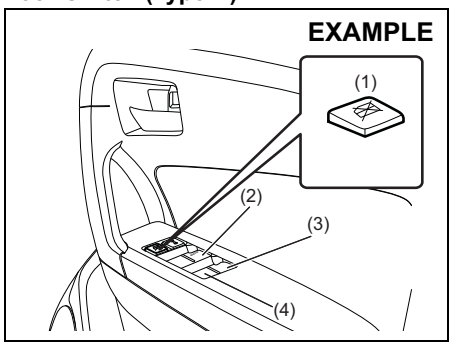

82PH02014

The driver's door also has a lock switch (1) for the passenger's window(s). When you push in the lock switch (1), the passenger's window(s) cannot be raised or lowered by operating any of the switches (2), (3) or (4). To restore normal operation, release the lock switch by pushing again.

⚠ WARNING

- **You should always lock the passenger's window operation when there are children in the vehicle. Children can be seriously injured if they get part of their body caught by the window during operation.**
- **To avoid injuring an occupant by window entrapment, be sure no part of the occupant's body such as hands or head is in the path of the electric windows when closing them.**
- **Always remove the ignition key or take the keyless push start system remote controller with you when leaving the vehicle even if only for a short time. Also do not leave children alone in a parked vehicle. Unattended children could use the electric window switches and get trapped by the window.**

NOTE:
If you drive with one of the rear windows open, you may hear a loud sound caused by air vibration. To reduce the sound, open the driver's or front passenger's window, or narrow the rear window opening.

Pinching Prevention Function (if equipped)

If the driver's window has the auto-up feature, the driver's window is also equipped with the pinching prevention function. The function detects a foreign object caught in the window while being closed by the auto-up feature (by which you can close the window without holding the window switch in the up position), and stops the window closing to prevent damage.

⚠ WARNING

To avoid injuring an occupant by window entrapment, be sure no part of the occupant's body such as hands or head is in the path of the electric window when closing it.
The function may not detect the object depending on size, hardness, and position of the object caught by the closing window.

⚠ CAUTION

- **The pinching prevention function does not act while you are holding the window switch in the up position.**
- **The pinching prevention function may not detect an object caught in the window just before the window is fully closed.**

NOTE:
Even if you cannot close the window by the auto-up feature because there may be something wrong with the pinching prevention function, you can close the window by holding the window switch in the up position.
If you drive in extreme off-road condition, the pinching prevention function may operate accidentally because the window react to vehicle jolting.

The Pinching Prevention Function Initialization

When you disconnect and re-connect the battery or replace the power window fuse (20A), the function will be deactivated. In this condition, the auto-down feature will be deactivated, while the auto-up feature may remain being activated. The pinching prevention function needs to be initialized.

To initialize the pinching prevention function, use the following procedure:

1) Turn the ignition switch to the "ON" position or press the engine switch to change the ignition mode to "ON".
2) Open the driver's window fully by holding the window switch in the down position.
3) Close the driver's window by holding the switch in the up position, and keep holding the switch for 2 seconds after the window fully closed.
4) Check the driver's window if the auto-down/up feature work.

⚠ WARNING

Whenever you disconnect and reconnect the battery or replace the power window fuse (20A), the pinching prevention function needs to be initialized.
The pinching prevention function will not be activated until the initialization complete.

If the auto-down/up feature would not work after initialization, there might be something wrong with the pinching prevention function. Have your vehicle inspected by an authorised Maruti Suzuki workshop.

Mirrors

Inside Rearview Mirror

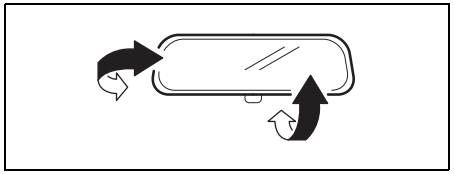

68LMT0205

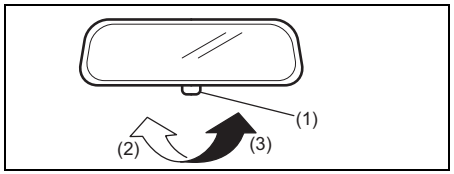

82PH02039

(2) Day driving
(3) Night driving

You can adjust the inside rearview mirror by hand so as to see the rear of your vehicle in the mirror.
To adjust the mirror, set the selector tab (1) to the day position, then move the mirror up, down or sideways by hand to obtain the best view.

When driving at night, you can move the selector tab to the night position to reduce glare from the headlights of vehicles behind you.

⚠ WARNING

- **Always adjust the mirror with the selector set to the day position.**
- **Only use the night position if it is necessary to reduce glare from the headlights of vehicles behind you. Be aware that in this position you may not be able to see some objects that could be seen in the day position.**

Outside Rearview Mirrors

Adjust the outside rearview mirrors so you can just see the side of your vehicle in the mirrors.

⚠ WARNING

Be careful when judging the size or distance of a vehicle or other object seen in the side convex mirror. Be aware that objects look smaller and appear farther away than when seen in a flat mirror.

EXAMPLE

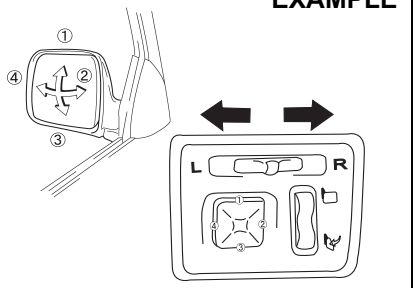

82PH02018

The switch to control the electric mirrors is located on the instrument panel. You can adjust the mirrors when the ignition switch is in the “ACC” or “ON” position, or the ignition mode is “ACC” or “ON”. To adjust the mirrors:

1) Move the selector switch (L - R knob) to the left or right to select the mirror you wish to adjust.
2) Press the control knob of the switch in the direction that corresponds to the direction in which you wish to move the mirror.
3) Return the selector switch to the center position to help prevent unintended adjustment.

Outside Rearview Mirrors Folding Switch (if equipped)

EXAMPLE

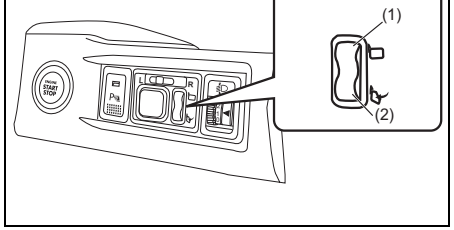

82PH02019

You can fold the mirrors when you park the vehicle in a narrow space. When the ignition mode is “ACC” or “ON”, push the lower part (2) of the folding switch to fold the mirrors. To unfold the mirrors, push the upper part (1) of the switch. Make sure the mirrors are completely unfolded before you start driving.

⚠ CAUTION

Moving mirrors can pinch and injure a hand. Do not allow any one’s hand to get near the mirrors when folding and unfolding the mirrors.

Front Seats

Seat Adjustment

⚠ WARNING

Never attempt to adjust the driver’s seat or seatback while driving. The seat or seatback could move unexpectedly, causing loss of control. Make sure that the driver’s seat and seatback are properly adjusted before you start driving.

⚠ WARNING

To avoid excessive seat belt slack, which reduces the effectiveness of the seat belts as a safety device, make sure that the seats are adjusted before the seat belts are fastened.

⚠ WARNING

All seatbacks should always be in an upright position when driving, or seat belt effectiveness may be reduced. Seat belts are designed to offer maximum protection when seatbacks are in the upright position.

EXAMPLE

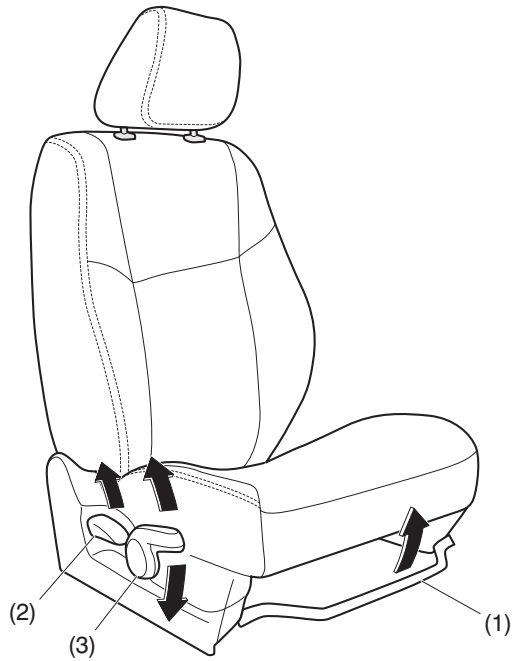

64MS154

Seat position adjustment lever (1)
Pull the lever up and slide the seat.

Seatback angle adjustment lever (2)
Pull the lever up and move the seatback.

Seat height adjustment lever (3) (if equipped)
Pull the lever up to raise the seat. Push the lever down to lower the seat.

After adjustment, try to move the seat and seatback forward and rearward to ensure that it is securely latched.

Head Restraints

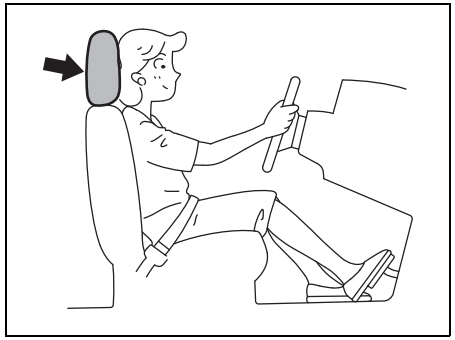

80J001

Head restraints are designed to help reduce the risk of neck injuries in the case of an accident. Adjust the head restraint to the position which places the center of the head restraint closest to the top of your ears. If this is not possible for very tall passengers, adjust the head restraint as high as possible.

⚠ WARNING

- **Never drive the vehicle with the head restraints removed.**
- **Do not attempt to adjust the head restraint while driving.**

NOTE:
It may be necessary to recline the seatback to provide enough overhead clearance to remove the head restraint.

Front

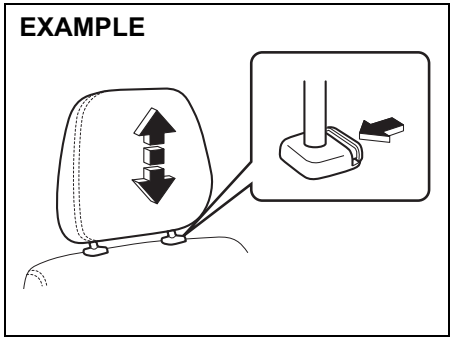

61MM0A032

To raise the front head restraint, pull upward on the restraint until it clicks. To lower the restraint, push down on the restraint while holding in the lock lever. If a head restraint must be removed (for cleaning, replacement, etc.), push in the lock lever and pull the head restraint all the way out.

Rear Seats

Head Restraints (if equipped)

Head restraints are designed to help reduce the risk of neck injuries in the case of an accident.

⚠ WARNING

- **Never drive the vehicle with the head restraints removed.**
- **Do not attempt to adjust the head restraint while driving.**

NOTE:
It may be necessary to fold forward the seatback to provide enough overhead clearance to remove the head restraint.

Adjust the head restraint to the position which places the center of the head restraint closest to the top of your ears. If this is not possible for very tall passengers, adjust the head restraint as high as possible.

Rear

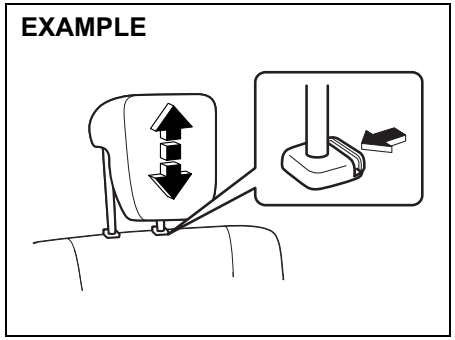

61MM0A033

To raise the rear head restraint, pull upward on the restraint until it clicks. To lower the restraint, push down on the restraint while holding in the lock lever. If a head restraint must be removed (for cleaning, replacement, etc.), push in the lock lever and pull the head restraint all the way out.

When installing a child restraint system, raise the head restraint to the most upper position.

Folding Rear Seats

The rear seat(s) of your vehicle can be folded forward to provide additional cargo space.

To fold the rear seats forward:

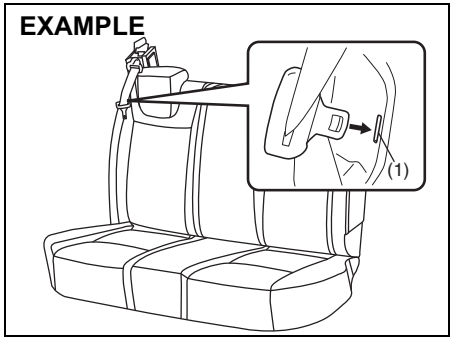

82PH02020

1) Insert the latch plate of the outboard lap-shoulder belts into the slit (1).

NOTICE

- **When you move a seatback, make sure the latch plate is inserted into the slit securely so the seat belts are not caught by the seatback, seat hinge, or seat latch. This helps prevent damage to the belt system.**
- **Make sure the belt webbing is not twisted.**

2) Set the front seat back to upright position and if necessary, slide the front seat forward.

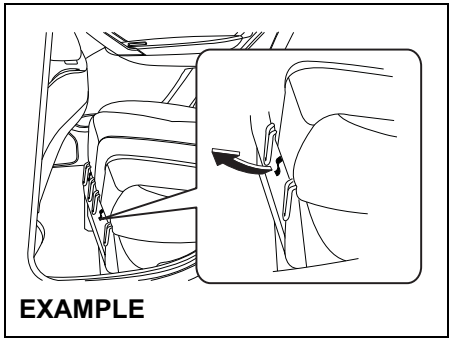

82PH02021

3) Lift the front portion of the seat cushion.

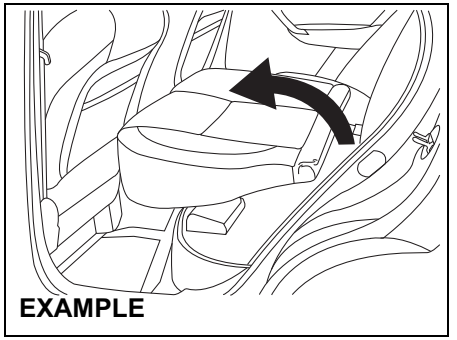

82PH02026

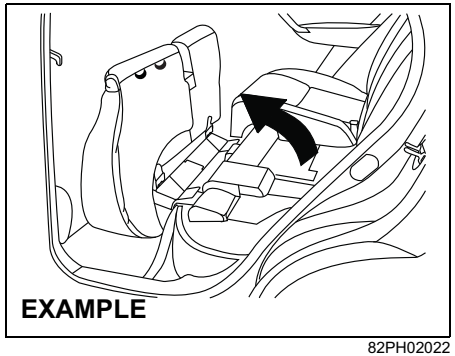

82PH02022

4) Lift the rear portion of seat cushion to upright position.
5) Remove the head restraint (if equipped) from the seat back(s).

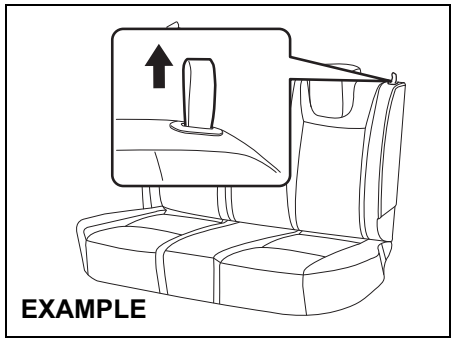

82PH02023

6) Pull up the release straps on the top of the seat(s), and fold the seatback forward.

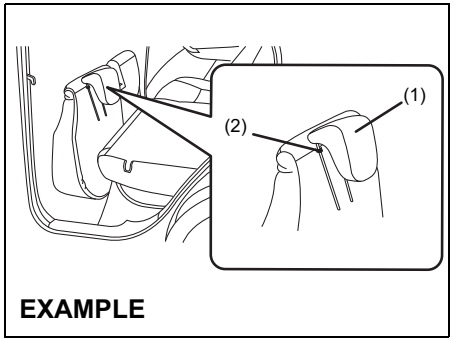

82PH02024

7) Insert the head restraint(s) (if equipped) rod (1) into the loop (2) provided on the cushion(s).

NOTICE

After folding the rear seatback forward, do not allow any foreign material to enter the lock slot. This may cause damage to the inside of the lock and prevent the seatback from being locked securely.

⚠ WARNING

If you need to carry cargo in the passenger compartment with the rear seat back folded forward, be sure to secure the cargo or it may be thrown about, causing injury. Never pile cargo higher than the seatbacks.

To return the seat to the normal position, follow the procedure below.

⚠ WARNING

When returning the rear seatback to the normal position, make sure that there is nothing around the striker. Any foreign materials prevent the seatback from being locked securely.

⚠ CAUTION

When returning the rear seatback to the normal position, be careful that your finger is not caught between the lock and the striker.

NOTE:
When returning the seat(s) to normal position, place the rear safety belt and buckles to proper position. Ensure that the safety belts are not twisted or pinched under the rear seat cushion.

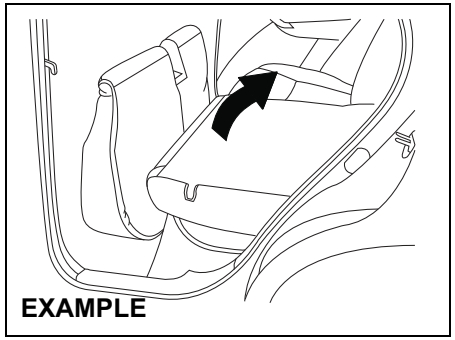

82PH02025

1) Raise the seatback until it locks into place.

After returning the seat, try moving the seatback to make sure they are securely latched.

⚠ CAUTION

Do not put your hand into the rear seatback lock opening, or your finger may get caught and be injured.

2) Install the head restraint(s) (if equipped) on the seat back.
3) Move the seat cushion to its original position. Push the front part of the seat cushion down to latch it in place.

NOTICE

- **When returning the rear seatback to the normal position, do not allow any foreign material to enter the lock opening. This may prevent the seatback from being locked securely.**
- **When returning the rear seatback to the normal position, be sure to handle it carefully by hand to avoid any damage to the lock itself. Do not push it by using some material or by applying excessive force.**
- **As the lock is designed exclusively for securing the rear seatback, do not use it for any other purpose. Incorrect use of it may cause damage to the inside of the lock and prevent the seatback from being locked securely.**

Seat Belts and Child Restraint Systems

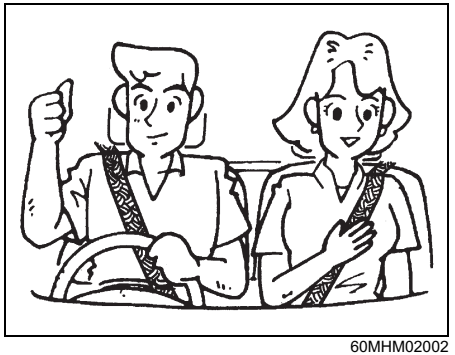

60MHM02002

⚠ WARNING

Wear Your Seat Belts at All Times.

⚠ WARNING

An air bag supplements, or adds to, the frontal crash protection offered by seat belts. The driver and all passengers must be properly restrained by wearing seat belts at all times, whether or not an air bag is mounted at their seating position, to minimize the risk of severe injury or death in the event of a crash.

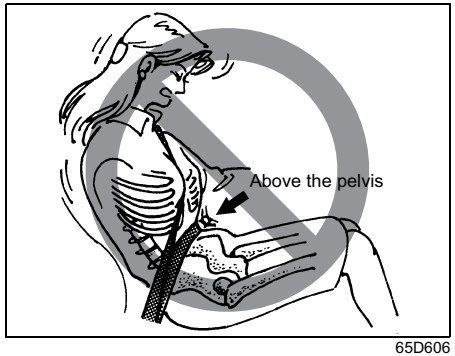

65D606

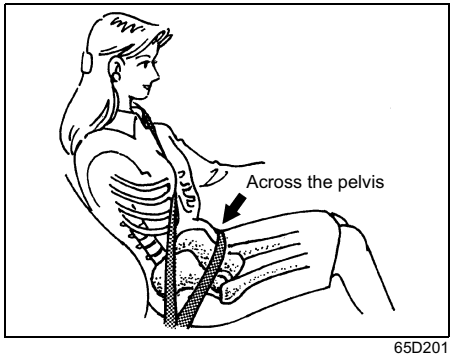

65D201

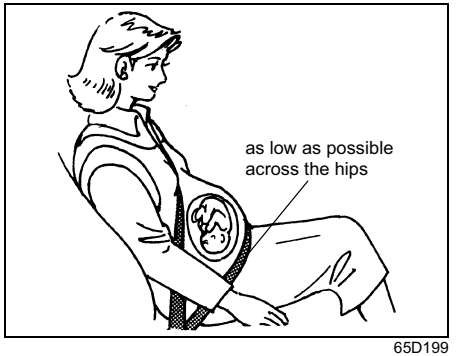

65D199

⚠ WARNING

- **Never allow persons to ride in the cargo area of a vehicle. In the event of an accident, there is a much greater risk of injury for persons who are not riding in a seat with their seat belt securely fastened.**
- **Seat belts should always be adjusted as follows:**
  - **– the lap portion of the belt should be worn low across the pelvis, not across the waist.**
  - **– the shoulder straps should be worn on the outside shoulder only, and never under the arm.**
  - **– the shoulder straps should be away from your face and neck, but not falling off your shoulder.**

(Continued)

⚠ WARNING

(Continued)

- **Seat belts should never be worn with the straps twisted and should be adjusted as tightly as is comfortable to provide the protection for which they have been designed. A slack belt will provide less protection than one which is snug.**
- **Make sure that each seat belt buckle is inserted into the proper buckle catch. It is possible to cross the buckles in the rear seat.**

(Continued)

⚠ WARNING

(Continued)

- **Pregnant women should use seat belts, although specific recommendations about driving should be made by the woman's medical advisor. Remember that the lap portion of the belt should be worn as low as possible across the hips, as shown in the diagram.**
- **Do not wear your seat belt over hard or breakable objects in your pockets or on your clothing. If an accident occurs, objects such as glasses, pens, etc. under the seat belt can cause injury.**

(Continued)

⚠ WARNING

(Continued)

- **Never use the same seat belt on more than one occupant and never attach a seat belt over an infant or child being held on an occupant's lap. Such seat belt use could cause serious injury in the event of an accident.**
- **Periodically inspect seat belt assemblies for excessive wear and damage. Seat belts should be replaced if webbing becomes frayed, contaminated, or damaged in any way. It is essential to replace the entire seat belt assembly after it has been worn in a severe impact, even if damage to the assembly is not obvious.**
- **Children age 12 and under should ride properly restrained in the rear seat.**
- **Infants and small children should never be transported unless they are properly restrained. Restraint systems for infants and small children can be purchased locally and should be used. Make sure that the system you purchase meets applicable safety standards. Read and follow all the directions provided by the manufacturer.**

(Continued)

⚠ WARNING

(Continued)

- **For children, if the shoulder belt irritates the neck or face, move the child closer to the center of the vehicle.**
- **Avoid contamination of seat belt webbing by polishes, oils, chemicals, and particularly battery acid. Cleaning may safely be carried out using mild soap and water.**
- **Do not insert any items such as coins, clips, etc. into the seat belt buckles, and be careful not to spill liquids into these parts. If foreign materials get into a seat belt buckle, the seat belt may not work properly.**
- **All seatbacks should always be in an upright position when driving, or seat belt effectiveness may be reduced. Seat belts are designed to offer maximum protection when seatbacks are in the upright position.**

Lap-Shoulder Belt

Emergency Locking Retractor (ELR)

The seat belt has an emergency locking retractor (ELR), which is designed to lock the seat belt only during a sudden stop or impact. It also may lock if you pull the belt across your body very quickly. If this happens, let the belt go back to unlock it, then pull the belt across your body more slowly.

Safety reminder

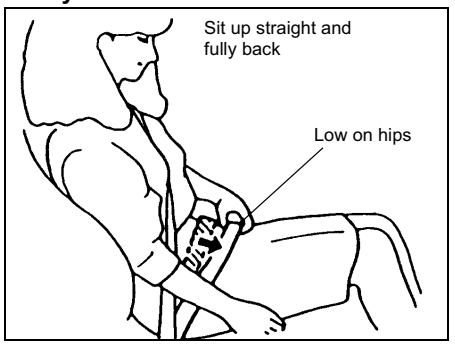

60A038

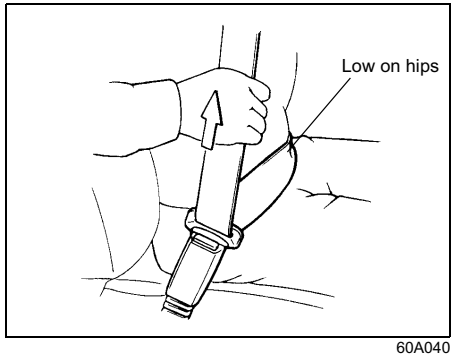

60A040

To reduce the risk of sliding under the belt during a collision, position the lap portion of the belt across your lap as low on your hips as possible and adjust it to a snug fit by pulling the shoulder portion of the belt upward through the latch plate. The length of the diagonal shoulder strap adjusts itself to allow freedom of movement.

All Seat Belts Except Rear Center

All seat belts except rear center are the lap-shoulder belt.

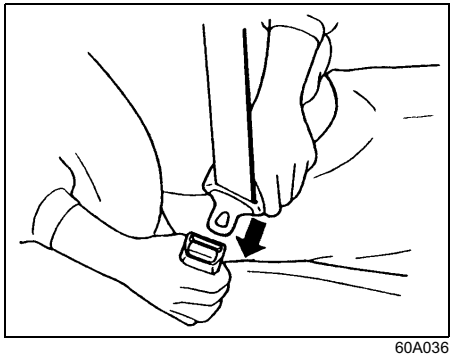

60A036

To fasten the seat belt, sit up straight and well back in the seat, pull the latch plate attached to the seat belt across your body and press it straight into the buckle until you hear a click.

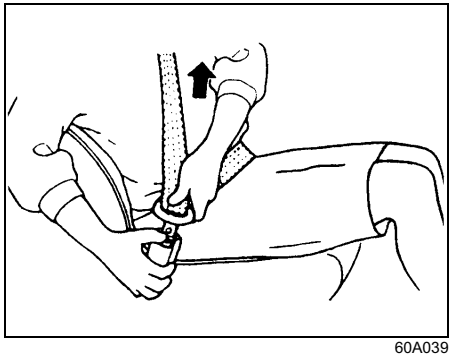

60A039

To unfasten the seat belt, push the button on the buckle and retract the belt slowly while attaching a hand to the belt or/and the latch plate.

Rear Center Seat Belt

Rear center seat belt is the lap belt.
To fasten the belt, pull the latch plate attached to the seat belt across your hips and press it straight into the buckle until you hear a click. To reduce the risk of sliding under the belt during a collision, position the belt across your lap as low on your hips as possible and adjust it to a snug fit.

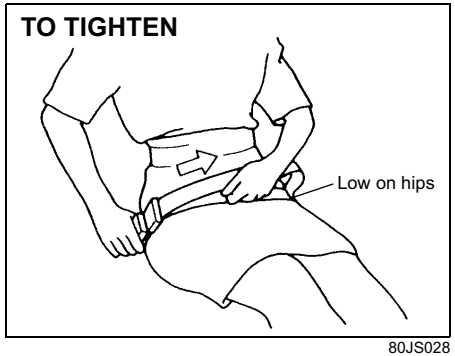

80JS028

To tighten the belt, pull the free end of the belt across alongside the lap strap.

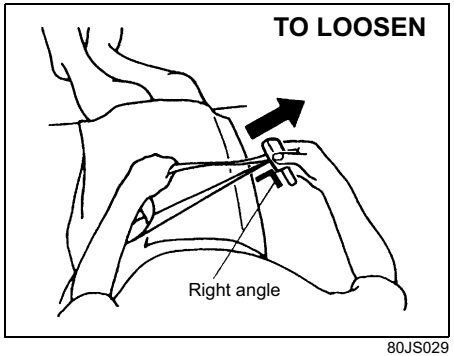

80JS029

To lengthen, release the latch plate from the buckle, pull the latch plate (adjuster) in the direction of the arrow, at right angles to the belt. The latch plate should then be refitted into the buckle and the belt tightened as previously described.

To unfasten the belt, press the release button on the buckle catch.

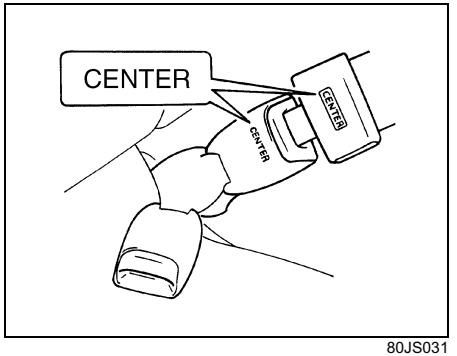

80JS031

NOTE:
To identify the center seat belt buckle and latch plate in the rear seat, “CENTER” is marked on the buckle and latch plate of the center lap belt. The buckles are designed so a latch plate cannot be inserted into the wrong buckle.

Driver's Seat Belt Reminder

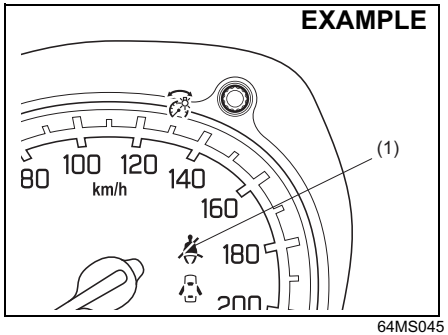

64MS045

(1) Driver's seat belt reminder light

When the driver doesn't buckle his or her seat belt, with the ignition switch in the "ON" position or the ignition mode "ON", the driver's seat belt reminder light in the instrument cluster will blink and a buzzer will sound as a reminder to the driver to buckle his or her sear belt. For more details, refer to the explanation below.

If the driver's seat belt remains unbuckled when the ignition switch is in the "ON" position or the ignition mode is "ON", the reminder works as follows:

1. The driver's seat belt reminder light will come on.
2. After the vehicle's speed has reached about 15 km/h, the driver's seat belt reminder light will blink and a buzzer will sound for about 95 seconds.
3. After step 2) has finished, the reminder light will remain on until the driver's seat belt is buckled.

If the driver has buckled his or her seat belt and later unbuckles the seat belt, the seat belt reminder system will be activated from step 1) or step 2) according to vehicle's speed. When the vehicle's speed is below about 15 km/h, the reminder will start from step 1). When the vehicle's speed is above about 15 km/h, the reminder will start from step 2).

The reminder will be automatically cancelled when the driver's seat belt is buckled or the ignition switch is turned off, ignition mode is switched to OFF position.

⚠ WARNING

It is absolutely essential that the driver and passengers wear their seat belts at all times. Persons who are not wearing seat belts have a much greater risk of injury if an accident occurs. Make a regular habit of buckling your seat belt before putting the key in the ignition or pressing the engine switch.

Rear Seat Belt Hanger

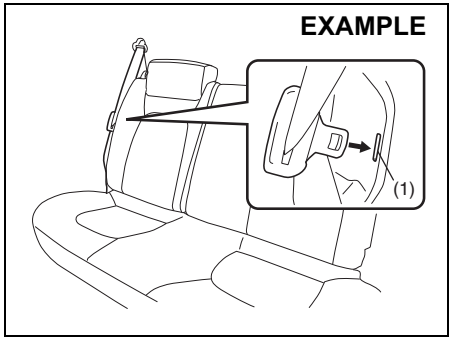

76MH0A028

NOTICE

- **When you move a seatback, make sure the latch plate is inserted into the slit (1) securely so the seat belts are not caught by the seatback, seat hinge, or seat latch. This helps prevent damage to the belt system.**
- **Make sure the belt webbing is not twisted.**

Shoulder Anchor Height Adjuster (if equipped)

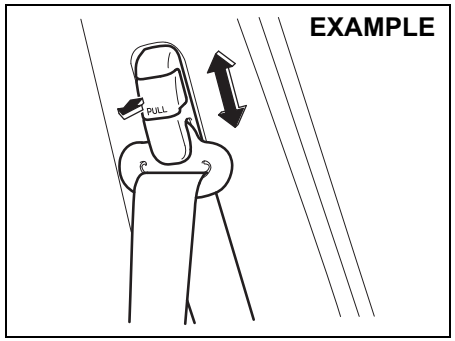

64J198

Adjust the shoulder anchor height so that the shoulder belt rides on the center of the outboard shoulder. To move upward, slide the anchor up. To move downward, slide the anchor down while pulling the lock knob out. After adjustment, make sure that the anchor is securely locked.

⚠ WARNING

Be sure that the shoulder belt is positioned on the center of the outside shoulder. The belt should be away from your face and neck, but not falling off your shoulder. Misadjustment of the belt could reduce the effectiveness of the safety belt in a crash.

Seat Belt Inspection

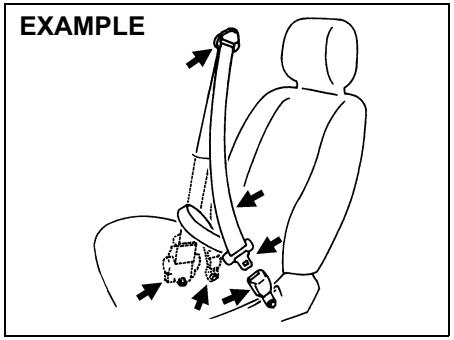

65D209S

Periodically inspect the seat belts to make sure they work properly and are not damaged. Check the webbing, buckles, latch plates, retractors, anchorages, and guide loops. Replace any seat belts which do not work properly or are damaged.

⚠ WARNING

Be sure to inspect all seat belt assemblies after any collision. Any seat belt assembly which was in use during a collision (other than a very minor one) should be replaced, even if damage to the assembly is not obvious. Any seat belt assembly which was not in use during a collision should be replaced if it does not function properly, it is damaged in any way or the seat belt pretensioner was activated.

Child Restraint Systems

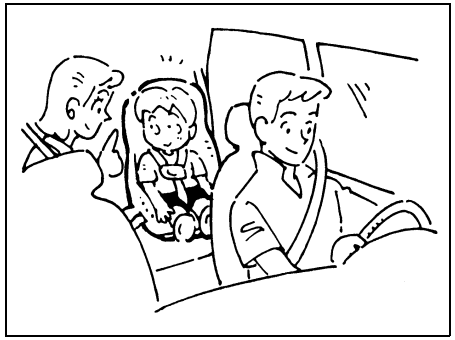

60G332S

Infant restraint

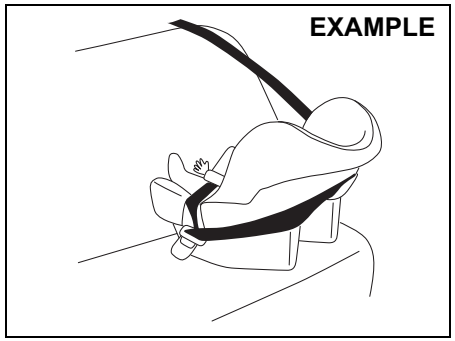

79J221

Child restraint

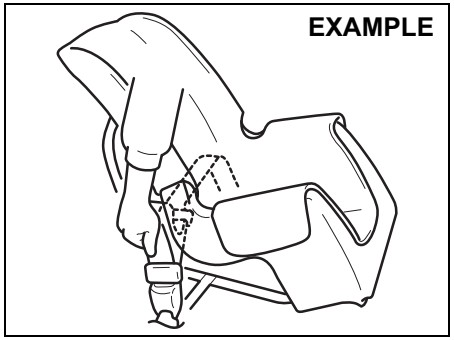

79J222

Booster seat

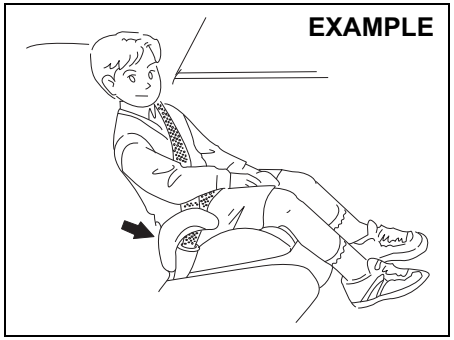

79J223

MARUTI SUZUKI highly recommends that you use a child restraint system to restrain infants and small children. Many different types of child restraint systems are available; make sure that the restraint system you select meets applicable safety standards.

All child restraint systems are designed to be secured on vehicle seats by either seat belts (lap belts or the lap portion of lap-shoulder belts). Whenever possible, MARUTI SUZUKI recommends that child restraint systems be installed on the rear seat. According to accident statistics, children are safer when properly restrained in rear seating positions than in front seating positions.

If you must use a front-facing child restraint in the front passenger's seat, adjust the passenger's seat as far back as possible.

NOTE:
Observe any statutory regulation about child restraints.

58MS030

⚠ WARNING

If your vehicle is equipped with a front passenger air bag, do not install a rear-facing child restraint in the front passenger's seat. If the passenger's air bag inflates, a child in a rear-facing child restraint could be killed or seriously injured. The back of a rear-facing child restraint would be too close to the inflating air bag.

⚠ WARNING

If you install a child restraint system in the rear seat, slide the front seat far enough forward so that the child's feet do not touch the front seatback. This will help avoid injury to the child in the event of an accident.

65D608

65D609

⚠ WARNING

Children could be endangered in a crash if their child restraints are not properly secured in the vehicle. When installing a child restraint system, be sure to follow the instructions below. Be sure to secure the child in the restraint system according to the manufacturer's instructions.

⚠ WARNING

In an accident or sudden stop, the rear seat armrest (if equipped) could fall forward. If there is a child in a rear-facing child restraint in the rear center seating position, the falling armrest could injure the child. Do not install a rear-facing child restraint in the rear center seating position.

Installation with Lap-Shoulder Seat Belts

NOTICE
Before installing a child restraint system in the rear seat, raise the head restraint (if equipped) to the upper most position.

NOTE:
If the upper most position head restraint interferes a child restraint system and prevents the child restraint system from being installed securely, remove the head restraint.
Stow the removed head restraint in the luggage compartment so it will not cause inconvenience to the occupants.

ELR type belt

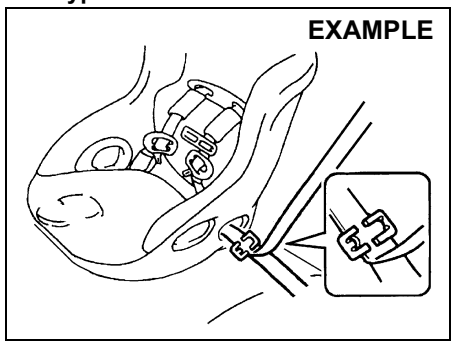

80JC021

Install your child restraint system according to the instructions provided by the child restraint system manufacturer.

Make sure that the seat belt is securely latched.

Try to move the child restraint system in all directions to make sure it is securely installed.

Installation with a Lap Belt

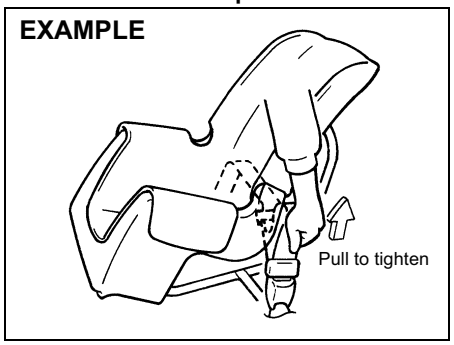

60G132

Install your child restraint system according to the instructions provided by the child restraint system manufacturer.

To lengthen or tighten the belt, refer to the "**Lap-belt**" item in this "Seat Belts and Child Restraint Systems" section. After making sure that the seat belt is securely latched, try moving the child restraint system in all directions, to make sure it is securely installed. If you need to tighten the belt, pull the free end of the webbing.

Child Restraint System for India

Child Restraint

The suitability of each passenger's seat position for carriage of children and fitting of child restraint system is shown in the table below. Whenever you carry children up to 12 years of age, properly use the child restraints which conform to AIS 072, the standard for child restraints, referring to the table.

MASS GROUP	Seating position (or other site)				
	Front Passenger	Rear Outboard	Rear Centre	Intermediate Outboard	Intermediate Centre
Group 0 Up to 10 kg	X	U	X	N.A.	N.A.
Group 0+ Up to 13 kg	X	U	X	N.A.	N.A.
Group I 9 to 18 kg	X	U	X	N.A.	N.A.
Group II 15 to 25 kg	X	U	X	N.A.	N.A.
Group III 22 to 36 kg	X	U	X	N.A.	N.A.

Key of letters to be inserted in the above table:
U =Suitable for 'universal' category restraints approved for use in this mass group
X =Seat position not suitable for children in this mass group
N.A = Seat position not available for children in this mass group.
NOTE: 'universal' is the category in the AIS 072.
: 'Outboard' indicates window side seat.

Seat Belt Pretensioner System (if equipped)

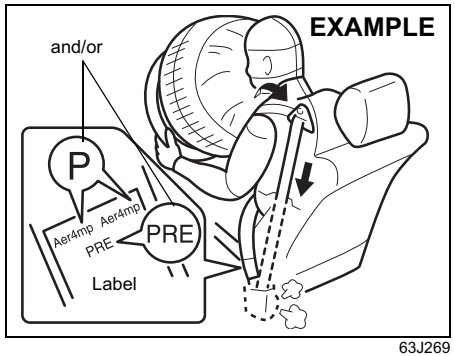

63J269

⚠ WARNING

This section of the owner's manual describes your vehicle's SEAT BELT PRETENSIONER SYSTEM. Please read and follow ALL these instructions carefully to minimize your risk of severe injury or death.

To determine if your vehicle is equipped with a seat belt pretensioner system at the front seating positions, check the label on the front seat belt at the bottom part. If the letters "p" and/or "PRE" appear as illustrated, your vehicle is equipped with the seat belt pretensioner system. You can use the pretensioner seat belts in the same manner as ordinary seat belts.
Read this section and the "Supplemental Restraint System (air bags)" section to learn more about the pretensioner system.

The seat belt pretensioner system works with the SUPPLEMENTAL RESTRAINT SYSTEM (Air Bags). The crash sensors and the electronic controller of the air bag system also control the seat belt pretensioners. The pretensioners are triggered only when there is a frontal crash severe enough to trigger the air bags and the seat belts are fastened. For precautions and general information including servicing the pretensioner system, refer to the "Supplemental Restraint System (air bags)" section in addition to this "Seat Belt Pretensioner System" section, and follow all those precautions.

The pretensioner is located in each front seat belt retractor. The pretensioner tightens the seat belt so the belt fits the occupant's body more snugly in the event of a frontal crash. The retractors will remain locked after the pretensioners are activated. Upon activation, some noise will occur and some smoke may be released. These conditions are not harmful and do not indicate a fire in the vehicle.

The driver and all passengers must be properly restrained by wearing seat belts at all times, whether or not a pretensioner is equipped at their seating position, to minimize the risk of severe injury or death in the event of a crash.

Sit fully back in the seat; sit up straight; do not lean forward or sideways. Adjust the belt so the lap portion of the belt is worn low across the pelvis, not across the waist. Please refer to the "Seat Adjustment" section and the instructions and precautions about the seat belts in this "Seat Belts and Child Restraint Systems" section for details on proper seat and seat belt adjustments.

Please note that the pretensioners along with the air bags will activate in severe frontal collisions. They are not designed to activate in side impacts, rear impacts, rollovers, or minor frontal collisions. The pretensioners can be activated only once. If the pretensioners are activated (that is, if the air bags are activated), have the pretensioner system replaced by an authorised Maruti Suzuki workshop as soon as possible.

The pretensioner system or the air bag system may not work properly if any of the following conditions occur :

1) If the air bag light on the instrument cluster does not come on briefly, when the ignition switch is turned to the “ON” position or the engine switch is pressed to change the ignition mode to “ON”.
2) If the air bag light comes on and stays on for more than 10 seconds, when the ignition switch is turned to the “ON” position or the engine switch is pressed to change the ignition mode to “ON”.
3) If the air bag light comes on while driving.

Have both systems inspected by an authorised Maruti Suzuki workshop as soon as possible.

Service on or around the pretensioner system components or wiring must be performed only by an authorised Maruti Suzuki workshop who is specially trained. Improper service could result in unintended activation of pretensioners or could render the pretensioner inoperative. Either of these two conditions may result in personal injury.

To prevent damage or unintended activation of the pretensioners, be sure the battery is disconnected and the ignition switch has been in the “LOCK” position or the ignition mode has been “LOCK” (OFF) for at least 90 seconds before performing any electrical service work on your authorised Maruti Suzuki workshop.

Do not touch pretensioner system components or wiring. The wires are wrapped with yellow tape or yellow tubing, and the couplers are yellow. When scrapping your vehicle, ask your authorised Maruti Suzuki workshop, body repair shop, or scrap yard for assistance.

Supplemental Restraint System (air bags) (if equipped)

⚠ WARNING

This section of the owner's manual describes the protection provided by your Vehicle's SUPPLEMENTAL RESTRAINT SYSTEM (air bags). Please read and follow ALL these instructions carefully to minimize your risk of severe injury or death in the event of a collision.

Your vehicle is equipped with a Supplemental Restraint System consisting of the following components in addition to a lap-shoulder belt at each front seating position.

1. Driver's front air bag module
2. Front passenger's front air bag module (if equipped)
3. Seat belt pretensioners (if equipped)
4. Air bag controller
5. Forward crash sensor

EXAMPLE

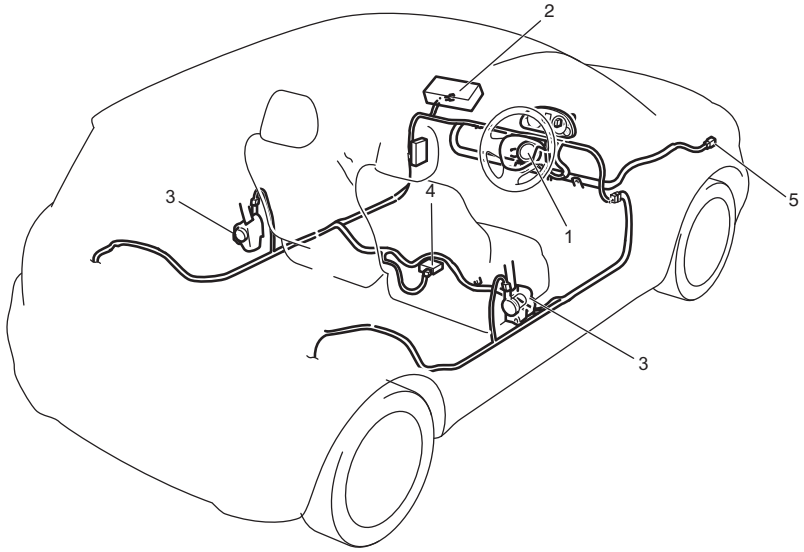

82PH02036

⚠ WARNING

An air bag supplements, or adds to, the crash protection offered by seat belts. The driver and all passengers must be properly restrained by wearing seat belts at all times, whether or not an air bag is mounted at their seating position, to minimize the risk of severe injury or death in the event of a crash.

Air bag light

63J030

If the air bag light on the instrument cluster does not blink or come on when the ignition switch is first turned to the “ON” position, or the ignition mode is first changed to “ON”, or the air bag light stays on, or comes on while driving, the air bag system (or the seat belt pretensioner system (if equipped)) may not work properly. Have the air bag system inspected by an authorised Maruti Suzuki workshop as soon as possible.

Air bag symbol (if equipped) meaning

EXAMPLE

72M00150

You may find this label on the sun visor.

⚠ WARNING

NEVER use a rearward facing child restraint on a seat protected by an ACTIVE AIRBAG in front of it, DEATH or SERIOUS INJURY to the CHILD can occur.

Front Air Bags

EXAMPLE

63J113

Front air bags are designed to inflate in severe frontal collisions when the ignition switch is in the “ON” position or the ignition mode is “ON”.

Front air bags are not designed to inflate in rear impacts, side impacts, rollovers or minor frontal collisions, since they would offer no protection in those types of accidents. Remember, since an air bag deploys only one time during an accident, seat belts are needed to restrain occupants from further movements during the accident.

Therefore, an air bag is NOT a substitute for seat belts. To maximize your protection, ALWAYS WEAR YOUR SEAT BELTS. Be aware that no system can prevent all possible injuries that may occur in an accident.

Driver's front air bag

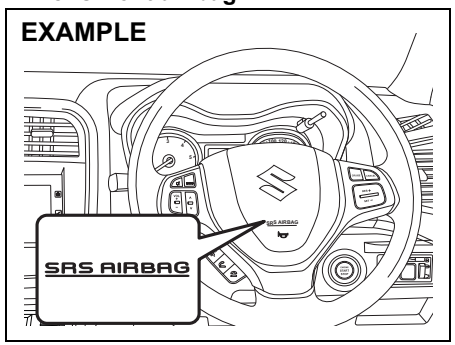

82PH02008

Front passenger's front air bag (if equipped)

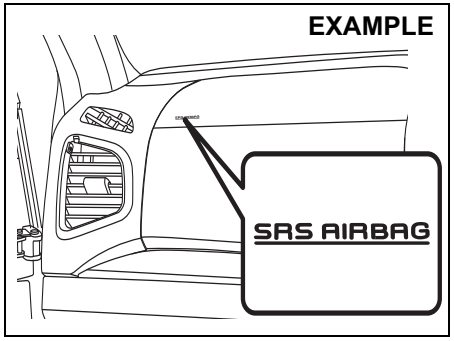

82PH02009

The driver's front air bag is located behind the center pad of the steering wheel and the front passenger's front air bag is located behind the passenger's side of the dashboard.
The words "SRS AIRBAG" are molded into the air bag covers to identify the location of the air bags.

58MS030

⚠ WARNING

If your vehicle is equipped with a front passenger air bag, do not install a rear-facing child restraint in the front passenger's seat. If the passenger's air bag inflates, a child in a rear-facing child restraint could be killed or seriously injured. The back of a rear-facing child restraint would be too close to the inflating air bag.

Please refer to the "Seat Belts and Child Restraint Systems" section in this section for details on securing your child.

Conditions of front air bags deployment (inflation)

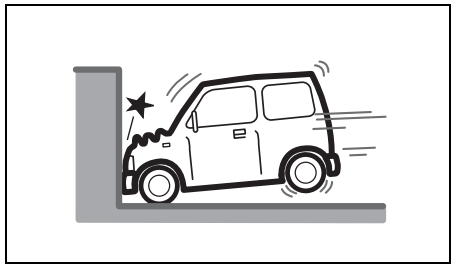

80J097

- In frontal collisions with a fixed wall that does not move or deform in more than about 25 km/h (15 mph)

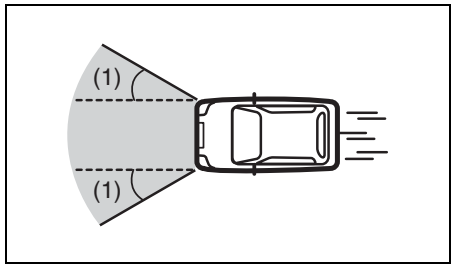

80J098E

- In collisions such as above at an angle of about 30 degrees (1) or less from the front

Conditions in which front air bags may inflate

Receiving a strong impact to the lower body of your vehicle, the front air bags will inflate in many cases.

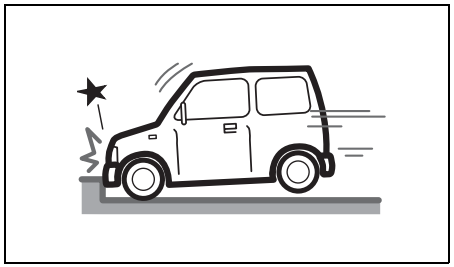

80J099

- Hitting a curb or medial strip

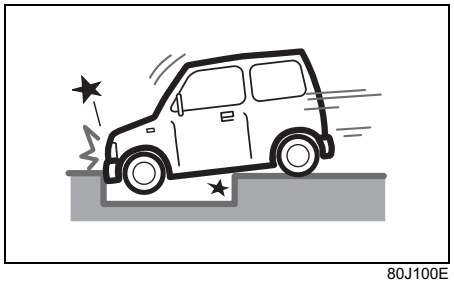

80J100E

- Falling into a deep hole or ditch

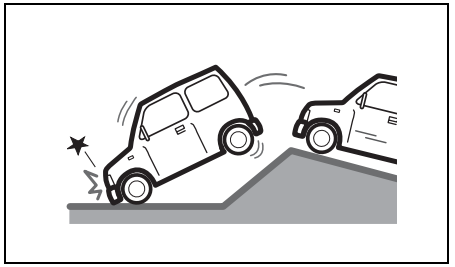

80J101

- Landing hard or falling

Front air bags may or may not inflate in a strong impact

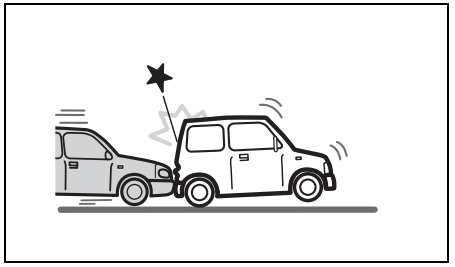

80J120

- Collision from the rear

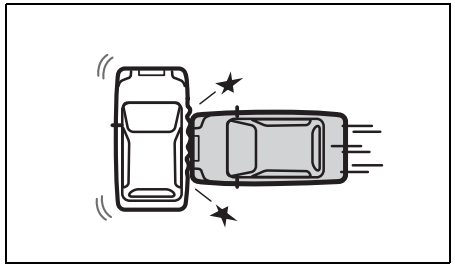

80J119

- Collision from the side

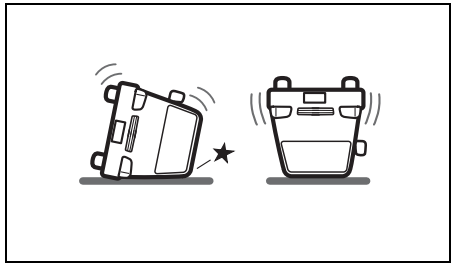

80J110

- Vehicle rollover

Front air bags may not inflate

The front air bags may not inflate when the impact is absorbed since the collision object moved, vehicle body deformed, or collision angle was greater than about 30 degrees from the front.

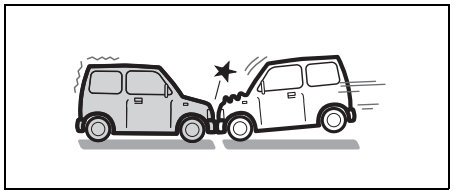

80J102

- Approximately 50 km/h (30 mph) or lower speed frontal collision to a stopped vehicle

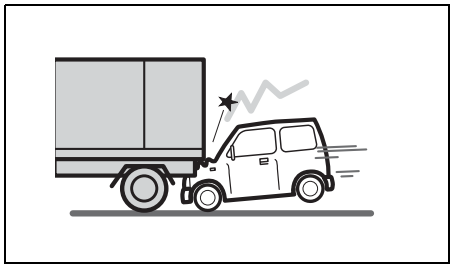

80J103

- Collision that the front of your vehicle goes under the bed of a truck etc.

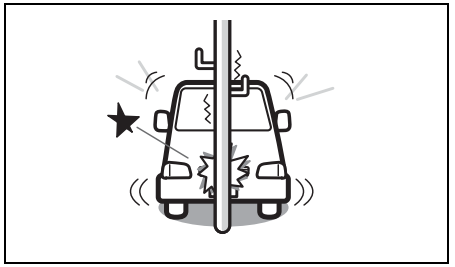

80J104

- Collision with a utility pole or stumpage

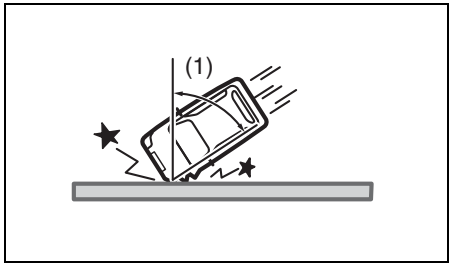

80J105E

- Collision with a fixed wall or guardrail at an angle of greater than about 30 degrees (1) from the front

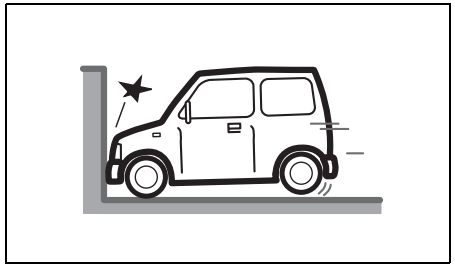

80J106

- In frontal collisions with a fixed wall that does not move or deform in less than about 25 km/h (15 mph)

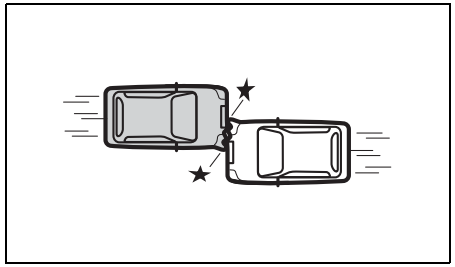

80J107

- Collision angle is offset from the vehicle angle (offset collision)

How the system works

In a frontal collision, the crash sensors will detect rapid deceleration, and if the controller judges that the deceleration represents a severe frontal crash, the controller will trigger the inflators. The inflators inflate the air bags with nitrogen or argon gas. The inflated air bags provide a cushion for your head and upper body. The air bag inflates and deflates so quickly that you may not even realize that it has activated. The air bag will neither hinder your view nor make it harder to exit the vehicle.

Air bags must inflate quickly and forcefully in order to reduce the chance of serious or fatal injuries. However, an unavoidable consequence of the quick inflation is that the air bag may irritate bare skin, such as the facial area. Also, upon inflation, a loud noise will occur and some powder and smoke will be released. These conditions are not harmful and do not indicate a fire in the vehicle. Be aware, however, that some air bag components may be hot for a while after inflation.

A seat belt helps to keep you in the proper position for maximum protection when an air bag inflates. Adjust your seat as far back as possible while still maintaining control of the vehicle. Sit fully back in your seat; sit up straight; do not lean over the steering wheel or dashboard. Please refer to the “Front Seat” section and the “Seat Belts and Child Restraint Systems” section in this section for details on proper seat and seat belt adjustments.

65D610

⚠ WARNING

- **The driver should not lean over the steering wheel. The front passenger should not rest his or her body against the dashboard, or otherwise get too close to the dashboard. In these situations, the out-of-position occupant would be too close to an inflating air bag, and may suffer severe injury.**
- **Do not attach any objects to, or place any objects over, the steering wheel or dashboard. Do not place any objects between the air bag and the driver or front passenger. These objects may interfere with air bag operation or may be propelled by the air bag in the event of a crash. Either of these conditions may cause severe injury.**

Note that even though your vehicle may be moderately damaged in a frontal collision, the collision may not have been severe enough to trigger the air bags to inflate. If your vehicle sustains ANY front-end damage, have the air bag system inspected by an authorised Maruti Suzuki workshop to ensure it is in proper working order.

Your vehicle is equipped with a diagnostic module which records information about the air bag system if the air bags deploy in a crash. The module records information about overall system status, which sensors activated the deployment, and for a certain vehicle only, whether the driver's seat belt was in use.

Servicing the air bag system

If the air bags inflate, have the air bags and related components replaced by an authorised Maruti Suzuki workshop as soon as possible.

If your vehicle ever gets in deep water and the driver's floor is submerged, the air bag controller could be damaged. If it does, have the air bag system inspected by the authorised Maruti Suzuki workshop as soon as possible.

Special procedures are required for servicing or replacing an air bag. For that reason, only an authorized authorised Maruti Suzuki workshop should be allowed to service or replace your air bags. Please remind anyone who services your vehicle that it has air bags.

Service on or around air bag components or wiring must be performed only by an authorised Maruti Suzuki workshop. Improper service could result in unintended air bag deployment or could render the air bag inoperative. Either of these two conditions may result in severe injury.

To prevent damage or unintended inflation of the air bag system, be sure the battery is disconnected and the ignition switch has been in the "LOCK" position or the ignition mode has been "LOCK" (OFF) for at least 90 seconds before performing any electrical service work on your Vehicle. Do not touch air bag system components or wires. The wires are wrapped with yellow tape or yellow tubing, and the couplers are yellow for easy identification.

Scrapping a vehicle that has an uninflated air bag can be hazardous. Ask your dealer, body repair shop or scrap yard for help with disposal.

Instrument Cluster

1. Speedometer
2. Tachometer
3. Fuel gauge
4. Temperature gauge
5. Information display
6. Trip meter selector knob
7. Indicator selector knob
8. Warning and indicator lights

EXAMPLE

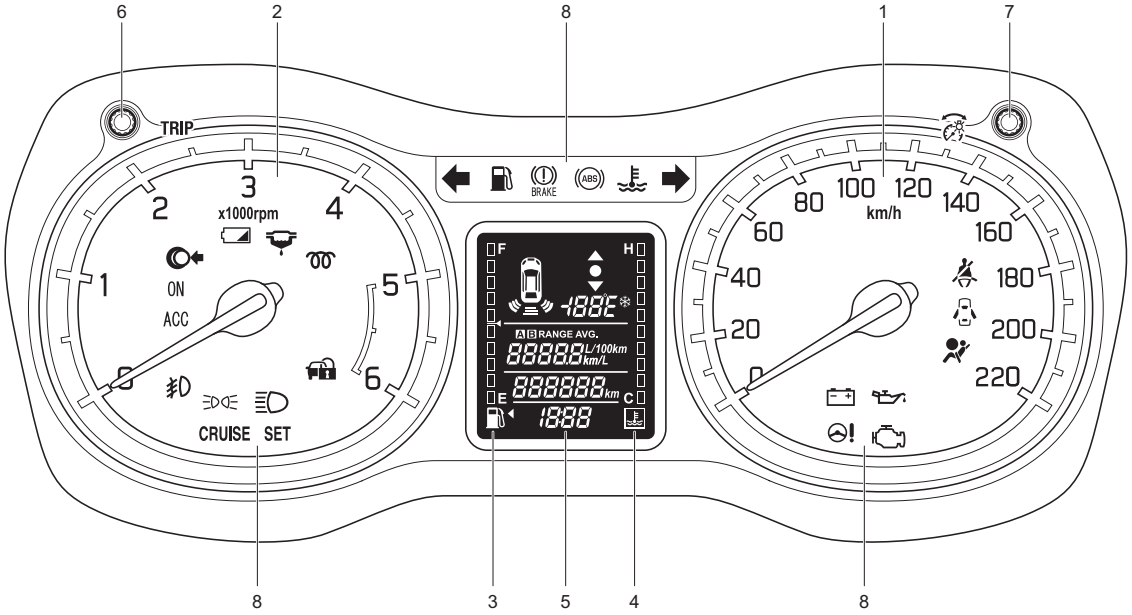

82PH016

Speedometer

The speedometer indicates vehicle speed.

Tachometer

The tachometer indicates engine speed in revolutions per minute.

NOTICE
Never drive the vehicle with the engine revving in the red zone, or severe engine damage can result. Keep the engine speed below the red zone even when downshifting to a lower gear position. Refer to "Downshifting maximum allowable speeds" in the "OPERATING YOUR VEHICLE" section.

Fuel Gauge

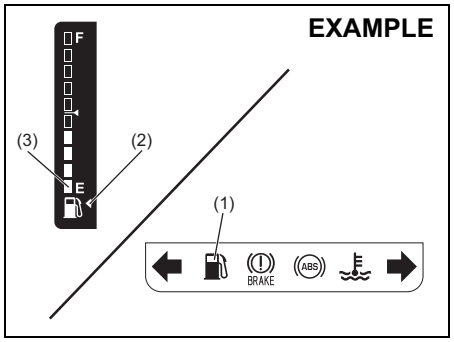

82PH02033

When the ignition switch is in the "ON" position or the ignition mode is "ON", this gauge gives an approximate indication of the amount of fuel in the fuel tank. "F" stands for full and "E" stands for empty.

If the fuel meter indicator shows only one segment to "E", refill the tank as soon as possible.

NOTE:
If the last segment (3) blinks, it means that the fuel is almost empty.

If the low fuel warning light (1) comes on, fill the fuel tank immediately.

NOTE:
The activation point of the low fuel warning light (1) varies depending on road conditions (for example, slope or curve) and driving conditions because of fuel moving in the tank.

Refer to "Low Fuel Warning Light" in "Warning and Indicator Lights" in this section for details.

The mark (2) indicates that the fuel filler door is located on the left side of the vehicle.

Temperature Gauge

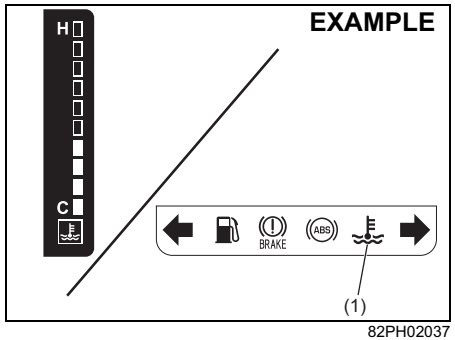

82PH02037

When the ignition switch is in the “ON” position or the ignition mode is “ON”, this gauge indicates the engine coolant temperature. Under normal driving conditions, the indicator should stay within the normal, acceptable temperature range between “H” and “C”. If the indicator approaches “H”, overheating is indicated. When the engine overheats, the Engine Coolant Temperature Light (1) will be ON. Refer to Engine Coolant Temperature Light section. Follow the instructions for engine overheating in the “EMERGENCY SERVICE” section.

NOTICE

Continuing to drive the vehicle when engine overheating is indicated can result in severe engine damage.

Brightness Control

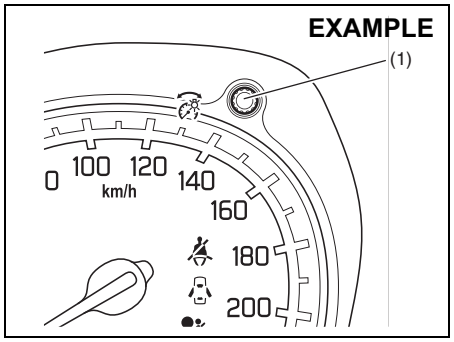

72PH02038

When the ignition switch is turned to the “ON” position or the engine switch is pressed to change the ignition mode to “ON”, the instrument cluster lights come on.

Your vehicle has a system to automatically dim the brightness of the instrument panel lights when the position lights or headlights are on.

When the position lights and/or headlights are “ON”, you can control the meter illumination intensity.

To increase the brightness of the instrument panel lights, turn the brightness control knob (1) clockwise.
To reduce the brightness of the instrument panel lights, turn the brightness control knob (1) counterclockwise.

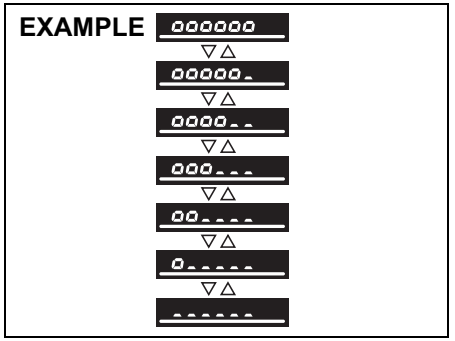

60MH025

⚠ WARNING

If you attempt to adjust the display while driving, you could lose control of the vehicle.
Do not attempt to adjust the display while driving.

NOTE:
- *If you do not turn the brightness control knob within about 10 seconds of activating the brightness control display, the brightness control display will be canceled automatically.If you want to exit before 10 seconds (auto exit) then Press “Trip Meter Selector Knob” in this mode.*
- *When you reconnect the battery, the brightness of the instrument panel lights will be reinitialized. Readjust the brightness according to your preference.*

Multi-Colour Illumination Display

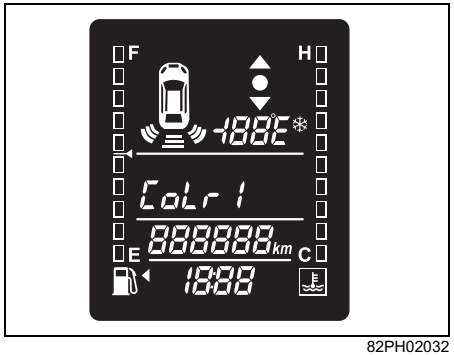

82PH02032

When the ignition switch is turned to the "ON" position or the engine switch is pressed to change the ignition mode to ON, the instrument panel lights come on.

Your vehicle has a multi-colour illumination display. The colour of the instrument panel can be selected from the five preset colour.

To enter the colour change mode of instrument panel, rotate the indicator selector knob in the clockwise or counter-clockwise direction.The last selected colour will be displayed.

To change the colour, press the indicator selector knob.

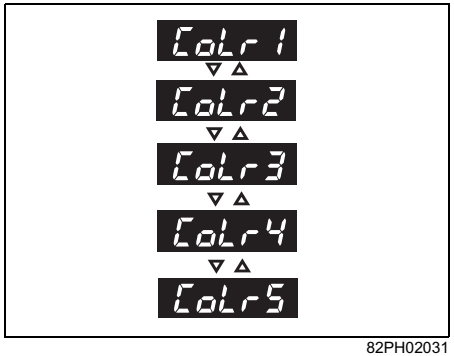

82PH02031

When you have selected the colour of your choice, press the trip meter selector knob to exit the colour change mode.

⚠ WARNING

If you attempt to adjust the display while driving, you could lose control of the vehicle.
Do not attempt to adjust the display while driving.

NOTE:

- *If you do not press indicator selector knob within about ten seconds of the color change, display will be canceled automatically.*
- *When you reconnect the battery, the colour of the instrument cluster will be reinitialized. Readjust the colour according to your preference.*

Information Display

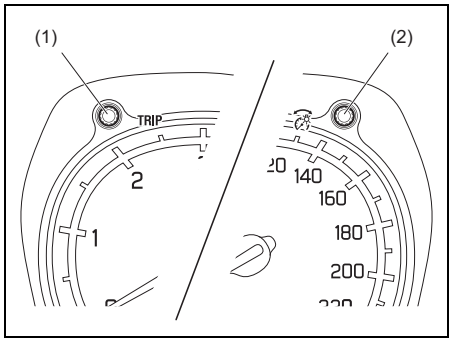

82PH069

Type A

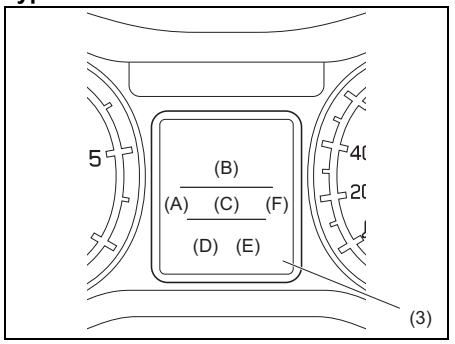

82PH071

Type B

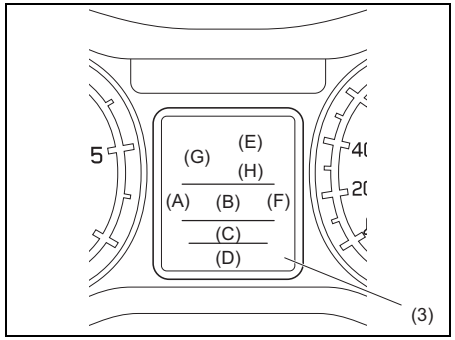

82PH070

(1) Trip meter selector knob
(2) Indicator selector knob
(3) Information display

When the ignition switch is in the “ON” position or the ignition mode is “ON”, the information display shows the following information.

Display (A)
Fuel gauge

Display (B)
Trip meter / Instantaneous / Average Fuel consumption / Driving range

Display (C)
Odometer

Display (D)
Clock

Display (E)
Gearshift indicator (if equipped)

Display (F)
Temperature gauge

Display (G)
Parking sensor indication (if equipped)

Display (H)
Thermometer (if equipped)

Fuel Gauge

When the ignition switch is in the “ON” position or the ignition mode is “ON”, the display (A) shows the fuel gauge.

Refer to “Fuel Gauge” in this section.

Trip Meter / Instantaneous / Average Fuel Consumption / Driving Range

When the ignition switch is in the “ON” position or the ignition mode is “ON”, the display (B) shows one of the indications described below.

To switch the display indication (B), push the trip meter selector knob (1) or the indicator selector knob (2) quickly.

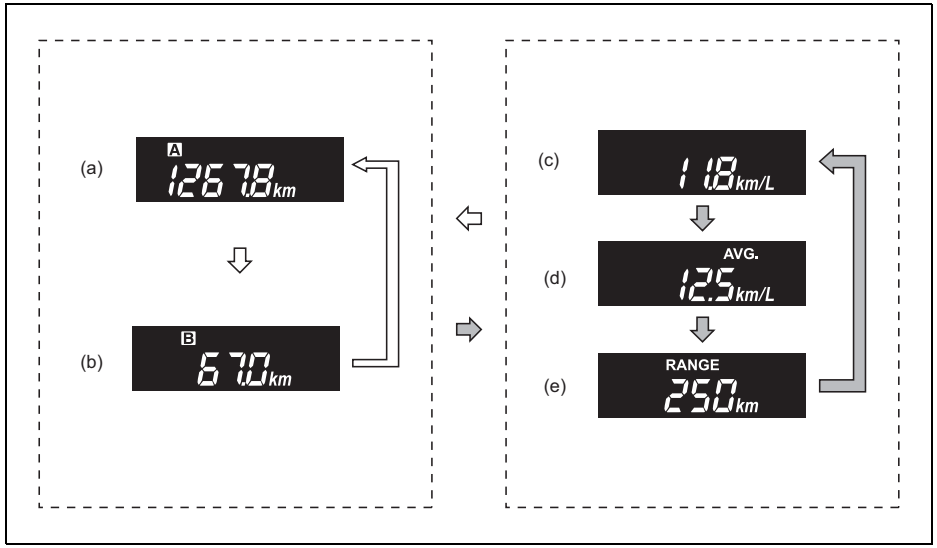

82PM02001

⇧⇩	Push the trip meter selector knob (1).
⇧⇩	Push the indicator selector knob (2).

(a) Trip meter A
(b) Trip meter B
(c) Instantaneous fuel consumption
(d) Average fuel consumption
(e) Driving range

⚠ WARNING

If you attempt to adjust the display while driving, you could lose control of the vehicle.
Do not attempt to adjust the display while driving.

NOTE:
- *Indications will change when you push and release a knob.*
- *The display shows estimated values. Indications may not be the same as actual values.*

Trip meter A (a) / Trip meter B (b)
The trip meter can be used to measure the distance traveled on short trips or between fuel stops.
You can use the trip meter A or trip meter B independently.

To reset the trip meter to zero, push and hold the trip meter selector knob (1) for a while when the display shows the trip meter.

NOTE:
The indicated maximum value of the trip meter is 9999.9. When you run past the maximum value, the indicated value will return to 0.0.

Instantaneous fuel consumption (c)
The display shows the value of instantaneous fuel consumption only when the vehicle is moving.

NOTE:
- *The display does not show the value unless the vehicle is moving.*
- *The indicated maximum value of instantaneous fuel consumption is 30. No more than 30 will be indicated on the display even if the actual instantaneous fuel consumption is higher.*
- *The indication on the display may be delayed if fuel consumption is greatly affected by driving conditions.*
- *The display shows estimated values. Indications may not be the same as actual values.*
- *You can change the units that instantaneous fuel consumption is displayed in. Refer to "Average fuel consumption" in this section.*

Average fuel consumption (d)
If you selected average fuel consumption the last time you drove the vehicle, the display shows the last value of average fuel consumption from previous driving when the ignition switch is turned to the "ON" position or the engine switch is pressed to change the ignition mode to "ON". Unless you reset the value of average fuel consumption, the display indicates the value of average fuel consumption which includes average fuel consumption during previous driving.

To reset the average fuel consumption to zero, push and hold the indicator selector knob (2) for a while when the display shows the average fuel consumption.

NOTE:
When you reset the indication or reconnect the negative (–) terminal to the battery, the value of average fuel consumption will be shown after driving for a while.

To change the unit of average fuel consumption, while pushing and holding the trip meter selector knob (1), turn the indicator selector knob (2).

EXAMPLE

(Initial setting)

82PH024

NOTE:
- *When you change the units that average fuel consumption is displayed in, the instantaneous fuel consumption units will be changed automatically.*
- *When you reconnect the negative (–) terminal to the battery, the unit of the average fuel consumption will be reinitialized. Change the unit again to your preference.*

Driving range (e)
If you selected driving range the last time you drove the vehicle, the display indicates "---" for a few seconds and then indicates the current driving range when the ignition switch is turned to the "ON" position or the engine switch is pressed to change the ignition mode to "ON".

The driving range shown in the display is the approximate distance you can drive until the fuel gauge indicates "E", based on current driving conditions.

When the low fuel warning light comes on, the display "---" will appear.

If the low fuel warning light comes on, fill the fuel tank immediately regardless of the value of driving range shown in the display.

As the driving range after refueling is calculated based on the most recent driving condition, the value is different each time you refuel.

NOTE:
- *If you refuel when the ignition switch is in the "ON" position or the ignition mode is "ON", the driving range may not indicate the correct value.*
- *When you reconnect the negative (–) terminal to the battery, the value of driving range will be shown after driving for a while.*

Odometer
When the ignition switch is in the "ON" position or the ignition mode is "ON", the display (C) shows the odometer. The odometer records the total distance the vehicle has been driven.

NOTICE

Keep track of your odometer reading and check the maintenance schedule regularly for required services.
Increased wear or damage to certain parts can result from failure to perform required services at the proper mileage intervals.

Clock
When the ignition switch is in the "ON" position or the ignition mode is "ON", the display (D) shows the time.

To change the time indication:
1) Push the trip meter selector knob (1) and the indicator selector knob (2) together.
2) To change the hour indication, turn the indicator selector knob (2) left or right repeatedly when the hour indication blinks. To change the hour indication quickly, turn and hold the indicator selector knob (2). To set the hour indication, push the indicator selector knob (2) and the minute indication will blink.
3) To change the minute indication, turn the indicator selector knob (2) left or right repeatedly when the minute indication blinks. To change the minute indication quickly, turn and hold the indicator selector knob (2). To set the minute indication, push the indicator selector knob (2).

⚠ WARNING

If you attempt to adjust the display while driving, you could lose control of the vehicle.
Do not attempt to adjust the display while driving.

NOTE:
When you reconnect the negative (–) terminal to the battery, the clock indication will be reinitialized. Change the indication again to your preference.

Gearshift Indicator (if equipped)
Refer to “Gearshift Indicator” in the “OPERATING YOUR VEHICLE” section.

Temperature Gauge
When the ignition switch is in the “ON” position or the ignition mode is “ON”, the display (F) shows the Temperature gauge. Refer to “Temperature Gauge” in this section.

Parking Sensor Indication
Refer to “Parking Sensors” in the “OPERATING YOUR VEHICLE” section.

Thermometer (if equipped)
When the ignition switch is in the “ON” position or the ignition mode is “ON”, the display (H) shows the thermometer.
The thermometer indicates the outside temperature.

EXAMPLE

82PH025

If the outside temperature nears freezing, the mark (h) will appear on the display.

NOTE:
- *The outside temperature indication is not the actual outside temperature when driving at low speed, or when stopped.*
- *If there is something wrong with the thermometer, or just after the ignition switch is turned to the “ON” position or the engine switch is pressed to change the ignition mode to “ON”, the display may not indicate the outside temperature.*

When the display (B) shows the driving range, you can change the unit of temperature.
To change the unit of temperature, while pushing and holding the trip meter selector knob (1), turn the indicator selector knob (2).

EXAMPLE

82PH026

NOTE:
When you change the unit that temperature is displayed in, the automatic heating and air conditioning system (if equipped) temperature display unit will be changed automatically.

NOTE:
When you reconnect the negative (–) terminal to the battery, the unit of temperature will be reinitialized. Change the unit again to your preference.

Setting Mode
In the setting mode, you can set up the following functions.

Indication	Functions
	Central door locking system “d1”
	Automatic door locking function “d2”
	Automatic door unlocking function “d3”
	Door locking and unlocking siren “d5”
	Footwell light settting “L1”
	Additional flashes of the turn signal “L2”

Indication	Functions
	Shock sensor “S2”
	Pre-warning sensitivity of the shock sensor “S3”
	Full blast warning sensitivity of the shock sensor “S4”
	Initialization setting “de-on”
	Exit the setting mode “End”

	Turn the indicator selector knob (2).
	Push the indicator selector knob (2).

NOTE:
Depending on vehicle's specifications, some items may not be displayed.

How to operate the setting mode:
1) Push and hold the indicator selector knob (2) until the display shows "door".
2) Turn and/or push the indicator selector knob (2) to select a function that you want to set up according to the above chart.
3) Turn and/or push the indicator selector knob (2) to register settings of the following functions.

Central door locking system "d1"
- d1-SL1: Unlock all doors by turning the key, pushing the keyless entry system transmitter, keyless push start system remote controller or request switch once
- d1-SL2: Unlock all doors by turning the key, pushing the keyless entry system transmitter, keyless push start system remote controller or request switch twice (default setting)

Automatic door locking function "d2"
- d2-SL1: Disable the automatic door locking function
- d2-SL2: Lock all doors when the vehicle speed reaches 15 km/h (default setting)

Automatic door unlocking function "d3"
- d3-SL1: Disable the automatic door unlocking function (default setting of vehicle with keyless push start system)
- d3-SL3: (Vehicle with keyless entry system) Unlock all doors when the key is pulled out from the ignition switch (default setting of vehicle with keyless entry)

  (Vehicle with keyless push start system) Unlock all doors when the ignition mode is "LOCK" (OFF)

Door locking and unlocking siren "d5"
- d5-SL1: Siren sounds when the door(s) is(are) locked or unlocked by using the keyless entry system transmitter, keyless push start system remote controller or request switch (default setting)
- d5-SL2: Siren does not sound when the door(s) is(are) locked or unlocked by using the keyless entry system transmitter, keyless push start system remote controller or request switch

Footwell light setting "L1"
- L1-SL1: Footwell light comes on when any of doors is open or headlights are on
- L1-SL2: Footwell light comes on when any of doors is open (default setting)
- L1-SL3: Disable the footwell light

Additional flashes of the turn signal "L2"
- L2-SL1: Turn signal flashes three times after the turn signal lever is returned (default setting)
- L2-SL2: Disable the additional flashes of turn signal

Shock sensor "S2"
- S2-SL1: Enable the shock sensor
- S2-SL2: Disable the shock sensor (default setting)

Pre-warning sensitivity of the shock sensor "S3"
- S3-L00: Disable the pre-warning
- S3-L01 to L15:
  Adjust the pre-warning sensitivity of shock sensor (Lowest sensitivity level is L01 and highest is L15, and default setting is L14)

Full blast warning sensitivity of the shock sensor "S4"
- S4-L00: Disable the full blast warning
- S4-L01 to L15: Adjust the full blast warning sensitivity of shock sensor (Lowest sensitivity level is L01 and highest is L15, and default setting is L09)

Initialization setting "dEFAUL-on"
- dEFAUL-on: Initialize all settings

EXAMPLE

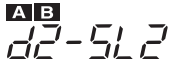

76MH0017

NOTE:
- *As shown in the above illustration, " A B " on the display indicates the current setting.*
- *To go back to the higher level display during operation, turn the indicator selector knob (2) to display "bACK" or "-bAC" and then push the indicator selector knob (2).*

4) To exit the setting mode, switch the display to show "End" and then push the indicator selector knob (2).

Warning and Indicator Lights

Brake System Warning Light

65D477

Three different types of operations exist depending on the vehicle's specification.

1) The light comes on briefly when the ignition switch is turned to the "ON" position or the engine switch is pressed to change the ignition mode to "ON".
2) The light comes on when the parking brake is engaged with the ignition switch in the "ON" position or the ignition mode "ON".
3) The light comes on when under either or both of above two conditions.

The light also comes on when the fluid in the brake fluid reservoir falls below the specified level.

The light should go out after starting the engine and fully releasing the parking brake, if the fluid level in the brake fluid reservoir is adequate.

If your vehicle is equipped with the ABS, the brake system warning light also comes on together with the ABS warning light when the rear brake force control function (proportioning valve function) of the ABS system fails.

If the brake system warning light comes on while you are driving the vehicle, it may mean that there is something wrong with the vehicle's brake system. If this happens, you should:

1) Pull off the road and stop carefully.

⚠ WARNING

Remember that stopping distance may be longer, you may have to push harder on the pedal, and the pedal may go down farther than normal.

2) Test the brakes by carefully starting and stopping at the side of the road.
   – If you determine that it is safe, drive carefully at low speed to the nearest dealer for repairs, or
   – Have the vehicle towed to the nearest dealer for repairs.

⚠ WARNING

If any of the following conditions occur, you should immediately ask your authorised Maruti Suzuki workshop to inspect the brake system.

- **If the brake system warning light does not go out after the engine has been started and the parking brake has been fully released.**
- **If the brake system warning light does not come on when the ignition switch is turned to the "ON" position or the engine switch is pressed to change the ignition mode to "ON".**
- **If the brake system warning light comes on at any time during vehicle operation.**

NOTE:
Because the disc brake system is self-adjusting, the fluid level will drop as the brake pads become worn. Replenishing the brake fluid reservoir is considered normal periodic maintenance.

NOTE:
(Parking Brake Reminder Buzzer)
A buzzer sounds intermittently to remind you to release the parking brake if you start the vehicle without releasing the parking brake. Make sure that the parking brake is fully released and the brake system warning light turns off.

Driver's Seat Belt Reminder Light

60G049

When the driver doesn't buckle his or her seat belt, this light will come on and/or blink.
For details about the seat belt reminder, refer to "Seat Belts and Child Restraint Systems" in this section.

Air Bag Light

63J030

This light comes on for several seconds when the ignition switch is turned to the "ON" position or the engine switch is pressed to change the ignition mode to "ON" so you can check if the light is working.

The light will come on and stay on if there is a problem in the air bag system or the seat belt pretensioner system (if equipped).

⚠ WARNING

If the air bag light does not blink or come on briefly when the ignition switch is turned to the "ON" position or the engine switch is pressed to change the ignition mode to "ON", stays on for more than 10 seconds, or comes on while driving, the air bag system or the seat belt pretensioner system (if equipped) may not work properly. Have both systems inspected by an authorised Maruti Suzuki workshop.

Anti-Lock Brake System (ABS) Warning Light (if equipped)

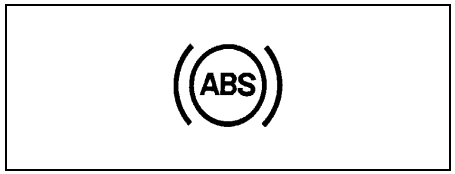

65D529

When the ignition switch is turned to the "ON" position or the engine switch is pressed to change the ignition mode to "ON", the light comes on briefly so you can check that the light is working.
If the light stays on, or comes on when driving, there may be something wrong with the ABS.

If this happens:
1) Pull off the road and stop carefully.
2) Turn the ignition switch to "LOCK" or change the ignition mode to "LOCK"(OFF) by pressing the engine switch and then start the engine again.

If the warning light comes on briefly then turns off, the system is normal. If the warning light still stays on, there is something wrong with the ABS system.

If the light and the brake system warning light stay on, or come on simultaneously when driving, your ABS system is equipped with the rear brake force control function (proportioning valve function) and there may be something wrong with both the rear brake force control function and anti-lock function of the ABS system.
If one of these happens, have the system inspected by your authorised Maruti Suzuki workshop
If the ABS becomes inoperative, the brake system will function as an ordinary brake system that does not have this ABS system.

For details of ABS system, refer to "Anti-Lock Brake System (ABS)" in the "OPERATING YOUR VEHICLE" section.

Malfunction Indicator Light

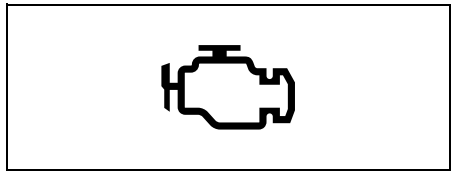

63J031

Your vehicle has a computer-controlled emission control system. A malfunction indicator light is provided on the instrument panel to indicate when it is necessary to have the emission control system serviced. The malfunction indicator light comes on when the ignition switch is turned to "ON" position or the engine switch is pressed to change the ignition mode to "ON" to let you know the light is working and goes out when the engine is started.

If the malfunction indicator light comes on when the engine is running, there is a damage with the emission control system. Bring the vehicle to your authorised Maruti Suzuki workshop to have the damage fixed.

NOTICE
Continuing to drive the vehicle when the malfunction indicator light is on can cause permanent damage to the vehicle's emission control system, and can affect fuel economy and driveability.

Electric Power Steering Light

79J039

This light comes on when the ignition switch is turned to the “ON” position or the engine switch is pressed to change the ignition mode to “ON”, and goes out when the engine is started.

If this light comes on while driving, the power steering system may not work properly. Have the system inspected by your authorised Maruti Suzuki workshop.

NOTE:
Following operations of the steering wheel while parking or driving at a very low-speed may have steering effort bigger gradually. This is not a malfunction of the steering system, but the power steering control system limits the power assist in order to prevent them from overheating.
- *The steering wheel is operated very often.*
- *The steering wheel is kept in a fully turned position for a long while.*

When the power steering control system cools down, the power steering system will return back to the original condition.

However, repeating these operations could cause damage to power steering system.

NOTE:
If the power steering system does not work properly, you will feel heavier to steer but you still will be able to steer.

NOTE:
If the steering is operated, you may hear a noise. This is normal and indicates that the power steering system works properly.

Oil Pressure Light

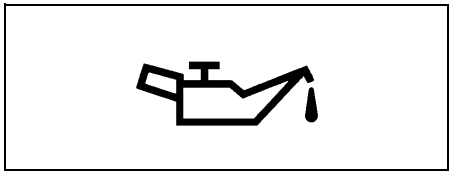

50G051

This light comes on when the ignition switch is turned to the “ON” position or the engine switch is pressed to change the ignition mode to “ON”, and goes out when the engine is started. If the light comes on while the engine is running, this indicates there is insufficient oil pressure. Pull off the road as soon as you can and stop the engine.
Check the oil level and add oil if necessary. If there is enough oil, the lubrication system should be inspected by your authorised Maruti Suzuki workshop before you drive the vehicle again.

NOTICE
• **If you operate the engine with this light on, severe engine damage can result.** • **Do not rely on the Oil Pressure Light to indicate the need to add oil. Be sure to periodically check the engine oil level.**

Charging Light

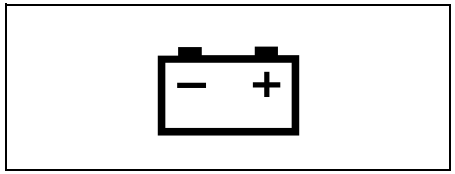

50G052

This light comes on when the ignition switch is turned to the “ON” position or the engine switch is pressed to change the ignition mode to “ON”, and goes out when the engine is started. If the light comes on while the engine is running this indicates some malfunction with the battery charging system.
The charging system should be inspected immediately by your authorised Maruti Suzuki workshop.

High Engine Coolant Temperature Warning Light (red color)

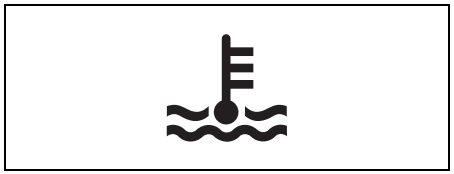

54G344

When the ignition switch is turned to the “ON” position or the engine switch is pressed to change the ignition mode to “ON”, this light comes on briefly so you can check that the light is working. If this light blinks while driving, it means the engine is running hot. Avoid driving conditions that may lead to actual overheating. If the light stays on without blinking, then the engine is overheating. Follow the instructions in the “If the Engine Overheats” of “EMERGENCY SERVICE” section.

NOTICE
Continuing to drive the vehicle when engine overheating is indicated can result in severe engine damage.

Immobilizer System Light

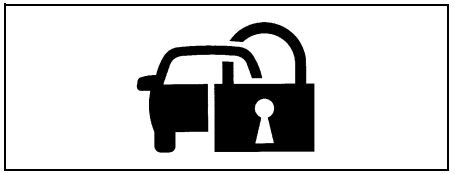

65D239

When the ignition switch is turned to the “ON” position or the engine switch is pressed to change the ignition mode to “ON”, the light comes on briefly so you can check that the light is working. If this light stays on or blinks, there is a problem with the system and the vehicle may not start. In such situations, have the vehicle inspected by your Maruti Suzuki authorised workshop.

Open Door Warning Light

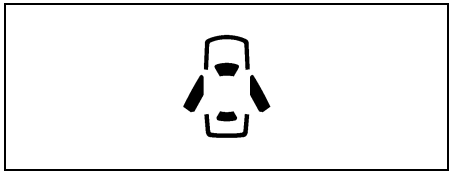

54G391

This light remains on until all doors (including the tailgate) are completely closed.

If any door (including the tailgate) is open when the vehicle is moving, a reminder with ding sound comes along with open

door warning light to remind you to close all doors completely.

Low Fuel Warning Light

54G343

If this light comes on, fill the fuel tank immediately.

When this light comes on, a reminder with ding sounds once to remind you to fill the fuel.
If you do not fill the fuel, a reminder with ding sound comes every time when the ignition switch is turned to the “ON” position or the engine switch is pressed to change the ignition mode to “ON”.

NOTE:
The activation point of this light varies depending on road conditions (for example, slope or curve) and driving conditions because of fuel moving in the tank.

Turn Signal Indicators

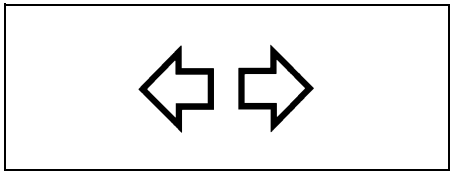

50G055

When you turn on the left or right turn signals, the corresponding green arrow on the instrument panel will flash along with the respective turn signal lights. When you turn on the hazard warning switch, both arrows will flash along with all of the turn signal lights.

Main Beam (high beam) Indicator Light

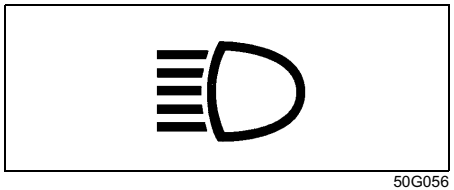

50G056

This indicator comes on when headlight main beams (high beams) are turned on.

Front Fog Light Indicator Light (if equipped)

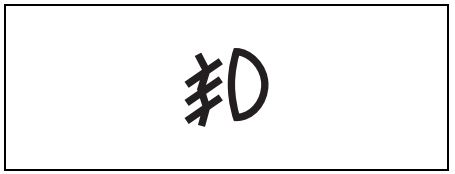

82PH045

The front fog light indicator light comes on when the front fog light is ON.

Illumination Indicator Light (if equipped)

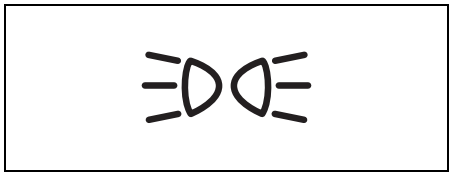

64J045

This indicator light comes on while the position lights, tail light and/or the headlights are on.

Fuel Filter Warning Light

60A541

This light comes on for several seconds when the ignition switch is turned to the “ON” position or the engine switch is pressed to change the ignition mode to “ON” so you can check the light is working.

If the light comes on when driving, there is a possibility to have water in the fuel filter. Drain water as soon as possible. For details of draining water, refer to “Fuel Filter” in the “INSPECTION AND MAINTENANCE” section.

Glow Plug Indicator Light

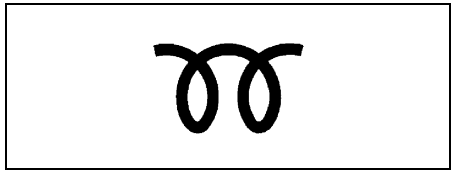

60A543

The light comes on when the ignition is switched “ON” and the coolant temperature is low. This light goes out when glow plug is heated enough to start the engine.

Keyless Push Start System Remote Controller Battery Consumption Warning Light (if equipped)

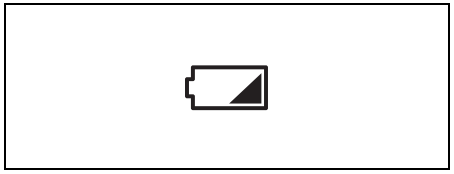

70K122

If the remote controller becomes unreliable, this light comes on for several seconds when the engine switch is pressed to change the ignition mode to “ON”.

PUSH Indicator Light (if equipped)

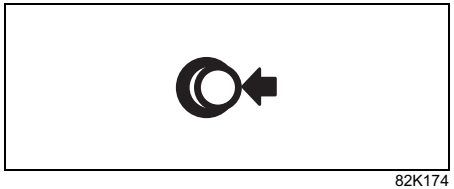

82K174

If this light comes on when clutch pedal is depressed, you can start the engine.

NOTE:
For keyless push start system the light blinks when you attempt to start the engine and the keyless push start system remote controller is not present inside the vehicle while cranking and vehicle can not be started.

“ACC” Indicator Light (if equipped)

82K097

This light comes on when the ignition mode is “ACC”.

Ignition “ON” Indicator Light (if equipped)

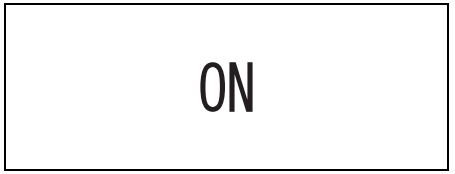

82K098

This light comes on when the ignition mode is “ON” with the engine off.

"CRUISE" Indicator Light (if equipped)

52D113

When the cruise control system is on, this light will be on.

"SET" Indicator Light (if equipped)

65D474

When a cruising speed of the cruise control is set, this light will be on.

Lighting Control Lever

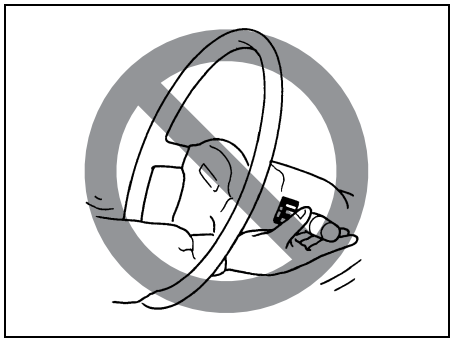

65D611

⚠ WARNING

To avoid possible injury, do not operate controls by reaching through the steering wheel.

Lighting Operation

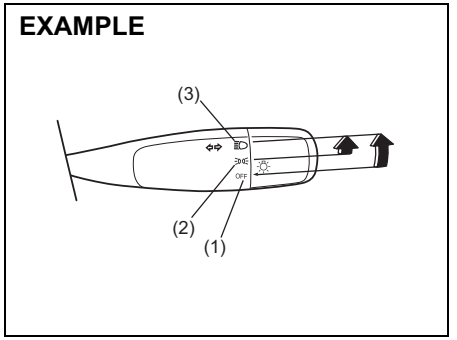

60MK011

To turn the lights on or off, twist the knob on the end of the lever. There are three positions:

OFF (1)
All lights are off.

(2)
Front position lights, tail lights, license plate light and instrument lights are on, but headlights are off.

(3)
Front position lights, tail lights, license plate light, instrument lights and headlights are on.

EXAMPLE

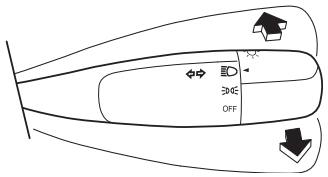

60MK012

With the headlights on, push the lever forward to switch to the high beams (main beams) or pull the lever toward you to switch to the low beams. When the high beams (main beams) are on, a light on the instrument panel will come on. To momentarily activate the high beams (main beams) as a passing signal, pull the lever slightly toward you and release it when you have completed the signal.

Automatic Lights Operation (if equipped)

EXAMPLE

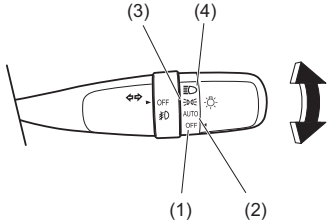

82PH046

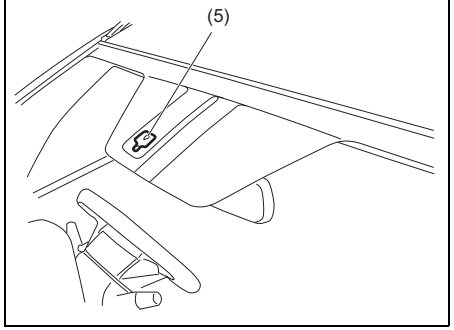

64MS060

Your vehicle's lighting system is controlled by two main systems: the Lighting switch and the Auto-On Headlight System (when the lighting switch is in the "AUTO" position).
The two systems work together to operate your lights as shown in the following chart:

ON: Lights ON
LIGHT: When it is light around the light sensor (5).
DARK: When it is dark around the light sensor (5).

Lighting switch position	Main lights to be operated	Ignition mode "LOCK" (OFF) or "ACC"		Ignition mode "ON"	
		LIGHT	DARK	LIGHT	DARK
(1) OFF	Position lights, Tail lights	–	–	–	–
	Headlights	–	–	–	–
(2) AUTO	Position lights, Tail lights	–	–	–	ON
	Headlights	–	–	–	ON
(3)	Position lights, Tail lights	ON	ON	ON	ON
	Headlights	–	–	–	–
(4)	Position lights, Tail lights	ON	ON	ON	ON
	Headlights	ON	ON	ON	ON

To turn the lights on or off, twist the knob on the end of the lever. There are four positions:

OFF (1)
All lights are off.

AUTO (2)
This function works when the ignition mode has been changed to "ON" by pressing the engine switch. The headlights and position lights are turned on and off automatically according to the amount of outside light detected by a sensor. They go out automatically when you change the ignition mode to "ACC" or "LOCK" (OFF) by pressing the engine switch.

The light sensor (5) for sensing the amount of outside light is installed on the upper part of the windshield. It also serves as the rain sensor for the rain-sensing wipers.

⚠ CAUTION

If the light sensor area of the windshield is covered with mud, ice, or other similar substances, the headlights and position lights may be turned on even when it is still light outside. Before removing such substances from the windshield, always set the wiper control lever to the "OFF" position. If the lever is left in the "AUTO" position, the wipers could unexpectedly operate and cause injury, and could also be damaged.

NOTE:
- *Avoid covering the light sensor area of the windshield with a sticker. The sticker may impair the performance of the sensor and make the system unable to control operation of the lights correctly.*
- *If you changed the ignition mode to "ON" by pressing the engine switch and the "AUTO" position remains selected, the headlights and position lights come on automatically as the outside gets dark even with the engine not running. Leaving the lights lit for a long time may lead to a completely discharged battery.*

(3)
Front position lights, tail lights, license plate light and instrument lights are on, but headlights are off.

(4)
Front position lights, tail lights, license plate light, instrument lights and headlights are on.

EXAMPLE

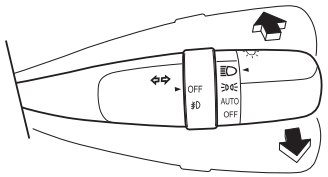

82PH047

With the headlights on, push the lever forward to switch to the high beams (main beams) or pull the lever toward you to switch to the low beams. When the high beams (main beams) are on, a light on the instrument panel will come on. To momentarily activate the high beams (main beams) as a passing signal, pull the lever slightly toward you and release it when you have completed the signal.

Auto-on headlight system

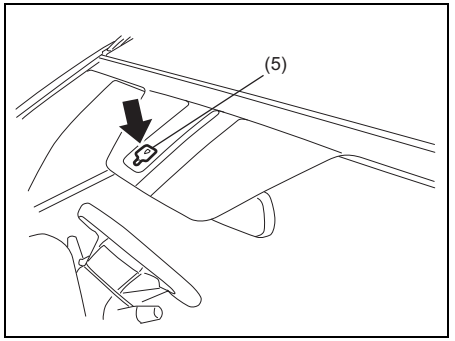

64MS062

The Auto-on headlight system automatically turns on all lights that are operated by the lighting control lever on the steering column, when the following three conditions are all met.

Conditions for Auto-on headlight system operation:
1) It is dark around the light sensor (5).
2) The lighting control lever is in the "AUTO" position.
3) You press the engine switch to change the ignition mode to "ON".

This system is operated by a signal from the light sensor (5) on the front windshield. Do not cover the sensor (5). If you do, the system will not work correctly.

⚠ WARNING

It takes about 5 seconds for the light sensor to react to a change in lighting conditions. To help avoid an accident due to reduced visibility, turn on your headlights before driving into a tunnel, parking structure or the like.

NOTE:
The light sensor reacts even to infrared rays, so it may operate incorrectly when there are strong infrared rays.

Reprogramming the automatic light function
The following settings of the automatic light function can be customized to your preference. Please contact an authorised Maruti Suzuki workshop if you want the function reprogrammed.

Sensitivity of the light sensor
The amount of outside light needed to turn the lights on and off is pre-set at the factory. The sensitivity of the light sensor can be adjusted so that the lights are turned on and off when it is:
- lighter outside than the pre-set condition, or
- darker outside than the pre-set condition

Rain-triggered automatic lighting operation
The setting of the auto-on headlight system can be changed to make it turn on the headlights:
- when the rain sensor senses heavy rainfall
- when the rain sensor senses light and heavy rainfall (in coordination with rain-sensing wiper operation), or
- independently from rain-sensing wiper operation.

Light Reminder Buzzer
The interior buzzer continuously beeps if you open the driver's door without turning off the headlights and position lights. This function is triggered under the following condition:
The headlights and/or position lights are on even after the ignition switch is turned off, or the engine switch is pressed to change the ignition mode to "LOCK" (OFF).

The buzzer stops sounding when you turn off the headlights and position lights.

Front Fog Light Switch (if equipped)

EXAMPLE

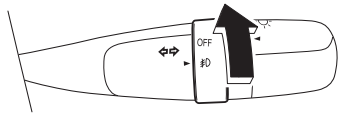

74LHT0226

The front fog light comes on when the fog light switch is twisted as shown in the illustration with the position lights, tail lights and/or the headlights are on. The front fog indicator light will come on the speedometer when the front fog light is on.

Headlight Leveling Switch

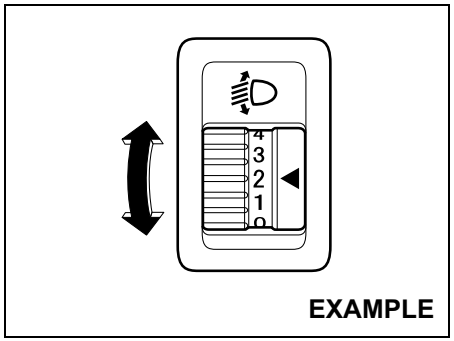

80JM040

Level the headlight beam according to the load condition of your vehicle by turning this switch. The chart below shows the appropriate switch position for different vehicle-load conditions.

Vehicle Load Condition	Switch Position
Driver only	0
Driver + 1 passenger (in front seat)	0
Driver + 4 passengers, no cargo	1
Driver + 4 passengers, cargo added	2
Driver + full cargo	3

Turn Signal Control Lever

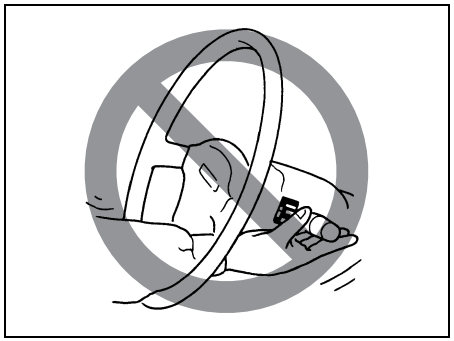

65D611

⚠ WARNING

To avoid possible injury, do not operate controls by reaching through the steering wheel.

Turn Signal Operation

With the ignition switch in the “ON” position or the ignition mode “ON”, move the lever up or down to activate the right or left turn signals.

Normal turn signal

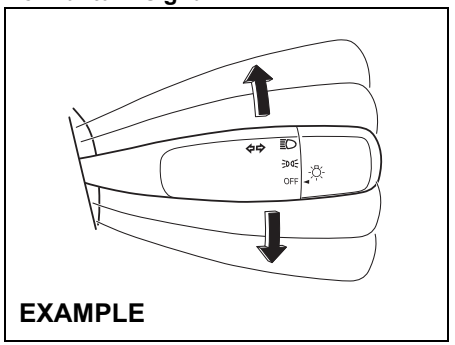

60MK013

Move the lever all the way upward or downward to signal. When the turn is completed, the signal will cancel and the lever will return to its normal position.

Lane change signal

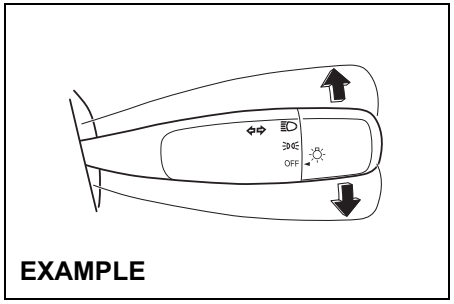

60MK014

Move the lever part-way in the direction to turn and hold it there.

- The turn signal and its indicator flash while the lever is held at the moved position.

The turn signal and its indicator flash three times even if you return the lever immediately after moving it.

NOTE:
The turn signal and its indicator can be set whether they flash three times after the turn signal lever is returned via the information display. Refer to "Information Display" in this section.

NOTE:
You can customize the setting for the number of times of flashing of the turn signal and its indicator (1 to 4 times). Please ask an authorised Maruti Suzuki workshop for the customization.

Hazard Warning Switch

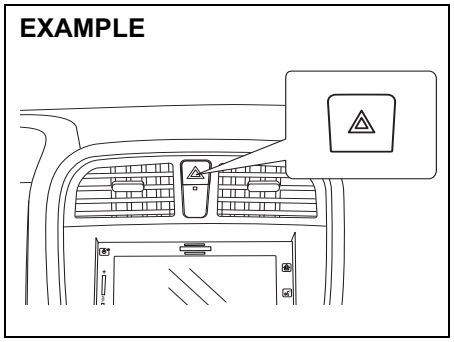

82PH02015

Push in the hazard warning switch to activate the hazard warning lights. All turn signal lights and both turn signal indicators will flash simultaneously. To turn off the lights, push the switch again.
Use the hazard warning lights to warn other traffic during emergency parking or when your vehicle could otherwise become a traffic hazard.

Windshield Wiper and Washer Lever

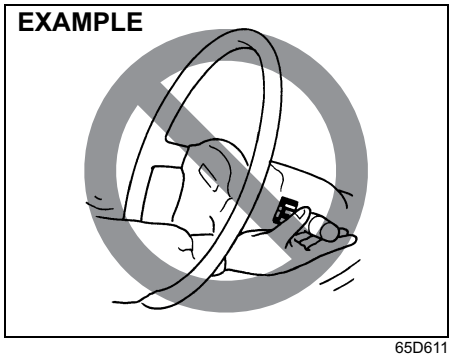

65D611

⚠ WARNING

To avoid possible injury, do not operate controls by reaching through the steering wheel.

Wiper and Washer Operation

When the ignition switch is in the "ON" position or the ignition mode is "ON", you can use the wiper/washer lever or switch (if equipped).

Windshield Wipers

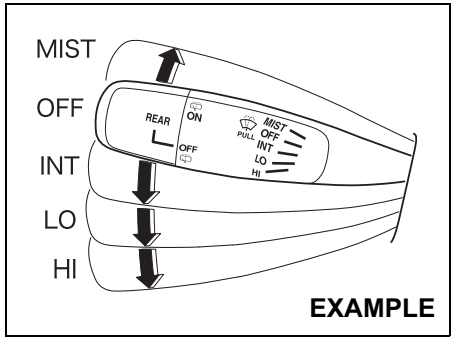

76MH0A049

To turn the windshield wipers on, move the lever down to one of the three operating positions. In the “INT” position, the wipers operate intermittently. The “INT” position is very convenient for driving in mist or light rain. In the “LO” position, the wipers operate at a steady low speed. In the “HI” position, the wipers operate at a steady high speed. To turn off the wipers, move the lever back to the “OFF” position.
Move the lever up and hold it to the “MIST” position, the windshield wipers will turn on continuously at low speed.

Windshield Wipers with Rain Sensing Function (if equipped)

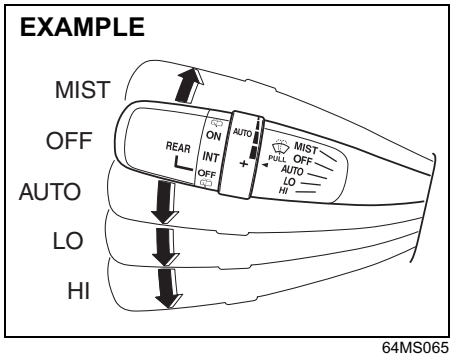

64MS065

Press the engine switch to change the ignition mode to “ON”. To turn the rain-sensing wipers on, move the lever down to one of the three operating positions. In the “AUTO” position (if provided), the wipers automatically operate when the wiper system senses rain or snow. In the “LO” position, the wipers operate at a steady low speed. In the “HI” position, the wipers operate at a steady high speed. To turn off the wipers, move the lever back to the “OFF” position.

Move the lever up and hold it to the “MIST” position; the wipers will operate continuously at low speed for as long as you hold the lever in the “MIST” position.

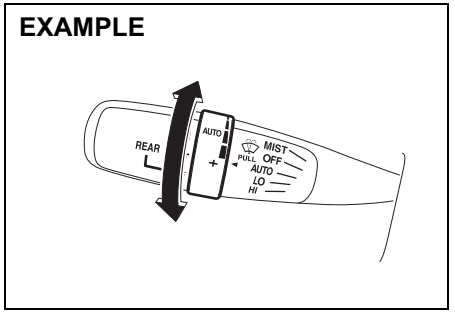

64MS066

If the control lever has an “AUTO” position, you can change the system’s sensitivity to rain/snow by turning the knob of the control lever forward (+) for increased sensitivity or rearward (–) for decreased sensitivity.

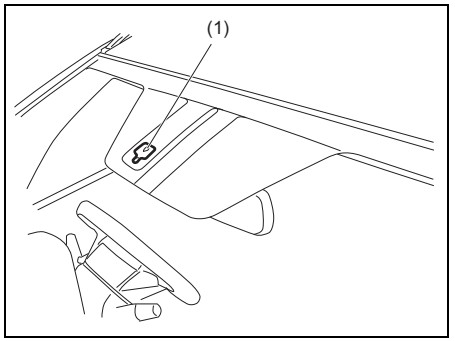

61M0219

(1) Rain sensor

⚠ CAUTION

- **Observe the following instructions when the wiper lever is set to the "AUTO" position with the engine switch in the "ON" mode. Otherwise, the wipers could unexpectedly operate and cause injury, and could also be damaged.**
  - **– Do not touch or wipe the rain sensor area of the windshield with a cloth.**
  - **– Do not hit the windshield or rain sensor.**
- **Be sure to set the wiper control lever to the "OFF" position before washing the vehicle in an automatic car wash or cleaning the windshield.**

NOTE:

- *Under the following conditions, the rain sensor may not be able to sense rain or snow correctly, and thus the rain-sensing wiper function may not work or may work incorrectly. (Use a position other than "AUTO" under these conditions.)*
  - *– Rain or snow does not hit the rain sensor area of the windshield, or the snow is not of a type that is able to be detected by the sensor.*
  - *– The rain sensor area is covered with mud, ice or other similar substance. You should remove any foreign substance.*
  - *– There were already raindrops on the windshield before starting rain-sensing wiper operation. You should remove the raindrops by operating the wipers under manual control.*
  - *– The rain sensor is hotter than 80°C (176°F) in the sun or lower than –10°C (14°F) in freezing weather. (The wipers do not operate under this condition.)*
  - *– The windshield is coated with a water-repellent substance, which causes raindrops to run down quickly. This will give a clearer view and the wipers may seem to operate too frequently. In this case, decrease the system's sensitivity.*
  - *– The sensor area is covered with a sticker.*
  - *– The wiper blades are damaged. You should replace them.*
  - *– The vehicle is running on bad road conditions.*
- *The following conditions may indicate problems with the rain-sensing wiper system. If your system exhibits any of the following conditions, have it inspected by an authorised Maruti Suzuki workshop.*
  - *– Rainfall/snowfall rate varies but the wiping interval remains constant.*
  - *– Rain/snow is falling but the wipers do not operate.*

Reprogramming the rain-sensing wiper function

The AUTO position operation of the rain-sensing wiper function can be customized to your preference by reprogramming its setting as follows. Please contact an authorised Maruti Suzuki workshop for this customization.

Full-automatic wiping (factory setting)

The system automatically selects the most appropriate of the following wiping modes: no wiping, intermittent wiping, low-speed wiping, and high-speed wiping.

Semi-automatic wiping

The system automatically selects the most appropriate of the following wiping modes: intermittent wiping, low-speed wiping, or high-speed wiping. (In this mode, the wipers do not stop automatically.)

Intermittent wiping

The wipers operate only in the intermittent wiping mode. The wiping interval can be changed with the knob on the control lever.

Windshield Washer

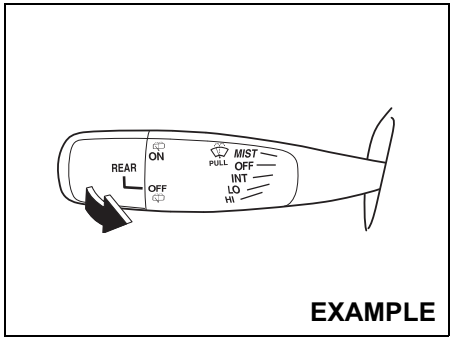

76MH0A050

To spray windshield washer fluid, pull the lever toward you. The windshield wipers will automatically turn on at low speed if they are not already on and the “INT” / “AUTO” position is equipped.

⚠ WARNING

- **To prevent windshield icing in cold weather, turn on the defroster to heat the windshield before and during windshield washer use.**
- **Do not use radiator antifreeze in the windshield washer reservoir. It can severely impair visibility when sprayed on the windshield, and can also damage your vehicle’s paint.**

NOTICE

To help prevent damage to the windshield wiper and washer system components, you should take the following precautions:

- **Do not continue to hold in the lever when there is no windshield washer fluid being sprayed or the washer motor can be damaged.**
- **Do not attempt to remove dirt from a dry windshield with the wipers or you can damage the windshield and the wiper blades. Always wet the windshield with washer fluid before operating the wipers.**
- **Clear ice or packed snow from the wiper blades before using the wipers.**
- **Check the washer fluid level regularly. Check it often when the weather is bad.**
- **Only fill the washer fluid reservoir 3/4 full during cold weather to allow room for expansion if the temperature falls low enough to freeze the solution.**

Rear Window Wiper/Washer Switch (if equipped)

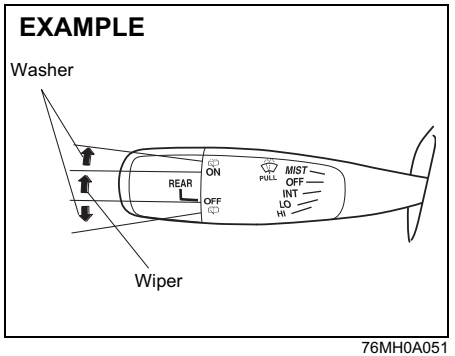

76MH0A051

To turn the rear wiper on, twist the rear wiper switch on the end of the lever forward to the “ON” position. To turn the rear wiper off, twist the switch rearward to the “OFF” position.

With the rear wiper in the “OFF” position, twist the switch rearward and hold it there to spray window washer fluid.

With the rear wiper in the “ON” position, turn the switch forward and hold it there to spray window washer fluid.

NOTICE

Clear ice or snow from the rear window and rear wiper blade before using the rear wiper. Accumulated ice or snow could prevent the wiper blade from moving, causing damage to the wiper motor.

Tilt Steering Lock Lever

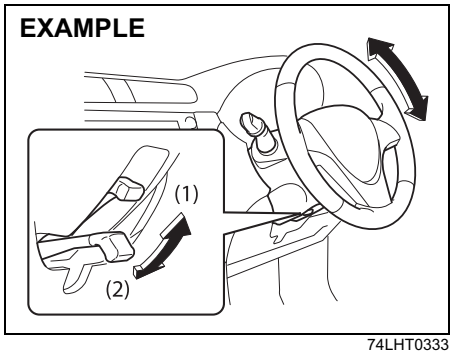

74LHT0333

The lock lever is located under the steering column. To adjust the steering wheel height:

1) Push down the lock lever to position (2) to unlock the steering column.
2) Adjust the steering wheel to the desired height and lock the steering column by pulling up the lock lever to position (1).
3) Try moving the steering wheel up and down to make sure it is securely locked in position.

⚠ WARNING

Never attempt to adjust the steering wheel height while the vehicle is moving or you could lose control of the vehicle.

Horn

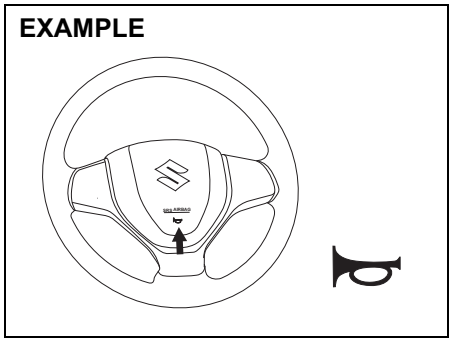

82PH02017

Press the horn button of the steering wheel to sound the horn. The horn will sound with the ignition switch in any position.

Heated Rear Window Switch (if equipped)

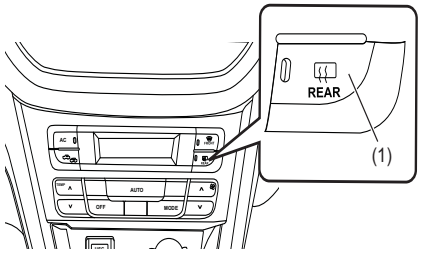

EXAMPLE

82PH02010

When the rear window is misted, push this switch (1) to clear the window.

An indicator light will be lit when the defogger is on. The defogger will work only when the engine is running. To turn off the defogger, push the switch again.

NOTICE
The heated rear window uses a large amount of electricity. Be sure to turn off after the window has become clear.

NOTE:

- *The defogger will work only when the engine is running.*
- *The defogger will automatically turn off after the defogger remains on for 15 minutes to prevent discharging of the battery.*

OPERATING YOUR VEHICLE

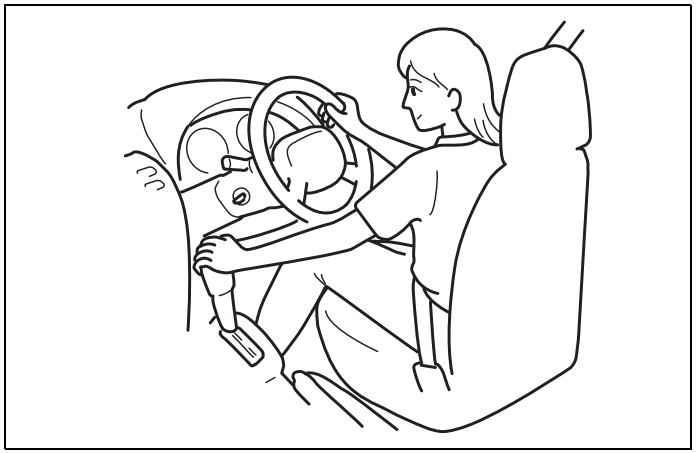

60MHMT3001

Exhaust Gas Warning 3-1
Daily Inspection Checklist 3-1
Engine Oil Consumption 3-2
Ignition Switch
(Vehicle without Keyless Push Start System) 3-3
Engine Switch
(Vehicle with Keyless Push Start System) 3-5
Keyless Push Start System (if equipped) 3-6
Parking Brake Lever 3-9
Pedal 3-10
Starting the Engine
(Vehicle without Keyless Push Start System) 3-11
Starting the Engine
(Vehicle with Keyless Push Start System) 3-12
Using the Transaxle 3-15
Gearshift Indicator (if equipped) 3-16
Cruise Control (if equipped) 3-17
Parking Sensors (if equipped) 3-19
Rearview Camera (if equipped) 3-25
Braking 3-28

Exhaust Gas Warning

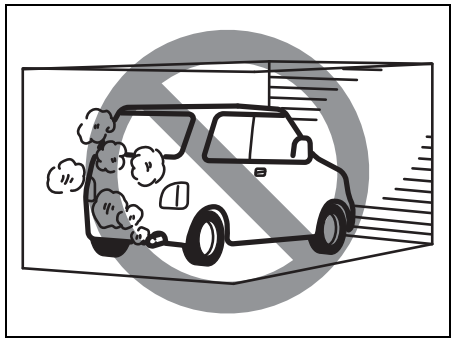

52D334

⚠ WARNING

Avoid breathing exhaust gases. Exhaust gases contain carbon monoxide, a potentially lethal gas that is colorless and odorless. Since carbon monoxide is difficult to detect by itself, be sure to take the following precautions to help prevent carbon monoxide from entering your vehicle.

- **Do not leave the engine running in garages or other confined areas.**

(Continued)

⚠ WARNING

(Continued)

- **Do not park with the engine running for a long period of time, even in an open area. If it is necessary to sit for a short time in a parked vehicle with the engine running, make sure the air intake selector is set to the fresh air position and the fan is at high speed.**
- **Avoid operating the vehicle with the tailgate or trunk open. If it is necessary to operate the vehicle with the tailgate or trunk open, make sure the sunroof (if equipped) and all windows are closed, and the blower is at high speed with the air intake selector set to the fresh air position.**
- **To allow proper operation of your vehicle's ventilation system, keep the air inlet grille in front of the windshield clear of snow, leaves, or other obstructions at all times.**
- **Keep the exhaust tailpipe area clear of snow and other material to help reduce the buildup of exhaust gases under the vehicle. This is particularly important when parked in blizzard conditions.**
- **Have the exhaust system inspected periodically for damage and leaks. Any damage or leaks should be repaired immediately.**

Daily Inspection Checklist

Before Driving

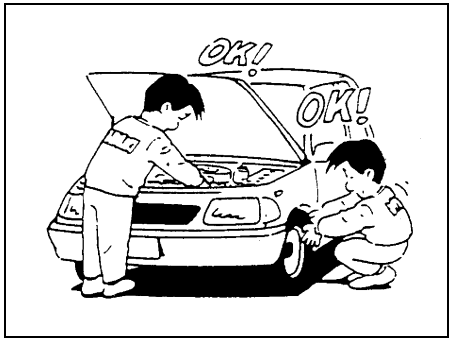

60A187S

1) Make sure that windows, mirrors, lights, and reflectors are clean and unobstructed.
2) Visually check the tires for the following points:
   – the depth of the tread groove
   – abnormal wear, cracks and damage
   – loose wheel nuts
   – existence of foreign material such as nails, stones, etc.

Refer to "Tires" in "INSPECTION AND MAINTENANCE" section for details.

3) Look for fluid and oil leaks.

NOTE:
It is normal for water to drip from the air conditioning system after use.

4) Make sure the hood is fully closed and latched.
5) Check the headlights, turn signal lights, brake lights and horn for proper operation.
6) Adjust the seat and head restraint (if equipped).
7) Check the brake pedal and the parking brake lever.
8) Adjust the mirrors.
9) Make sure that you and all passengers have properly fastened your seat belts.
10) Make sure that all warning lights come on as the key is turned to the "ON" position or the engine switch is pressed to change the ignition mode to ON.
11) Check all gauges.
12) Make sure that the BRAKE SYSTEM WARNING light turns off when the parking brake is released.

Once a week, or each time you fill your fuel tank, perform the following under-hood checks:

1) Engine oil level
2) Coolant level
3) Brake fluid level
4) Windshield washer fluid level
5) Battery solution level
6) Hood latch operation
   Pull the hood release handle inside the vehicle. Make sure that you cannot open the hood all the way without releasing the secondary latch. Be sure to close the hood securely after checking for proper latch operation. See "All latches, hinges & locks" of "CHASSIS AND BODY" in the "Periodic Maintenance Schedule" in the "INSPECTION AND MAINTENANCE" section for lubrication schedule.

⚠ WARNING

Make sure the hood is fully closed and latched before driving. If it is not, it can fly up unexpectedly during driving, obstructing your view and resulting in an accident.

Once a month, or each time you fill your fuel tank, check the tire pressure using a tire pressure gauge. Also check the tire pressure of the spare tire.

Engine Oil Consumption

It is normal for the engine to consume some engine oil during normal vehicle operation.

The amount of engine oil consumed depends on the viscosity of the oil, the quality of the oil and the conditions the vehicle is driven under.
More oil is consumed during high-speed driving and when there is frequent acceleration and deceleration. Under high loads, your engine also will consume more oil.
A new engine also consumes more oil, since its pistons, piston rings and cylinder walls have not yet become conditioned. New engines reach the normal level of oil consumption only after approximately 5000 km driving.

Oil consumption:
Max. 1.0 L per 1000 km

When judging the amount of oil consumption, note that the oil may become diluted and make it difficult to accurately judge the true oil level.
As an example, if a vehicle is used for repeated short trips, and consumes a normal amount of oil, the dipstick may not show any drop in the oil level at all, even after 1000 km or more of driving. This is because the oil is gradually becoming diluted with fuel or moisture, making it appear that the oil level has not changed.

You should also be aware that the diluting ingredients evaporate out when the vehicle is subsequently driven at high speeds, such as on an expressway, making it appear that oil is excessively consumed after high-speed driving.

Ignition Switch (Vehicle without Keyless Push Start System)

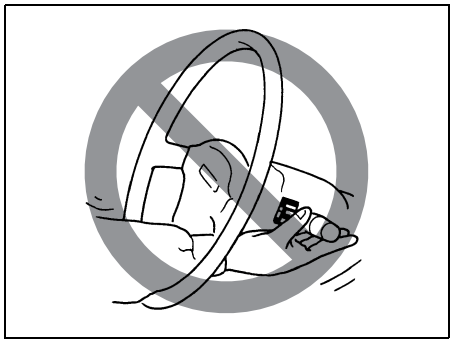

65D611

⚠ WARNING

To avoid possible injury, do not operate controls by reaching through the steering wheel.

EXAMPLE

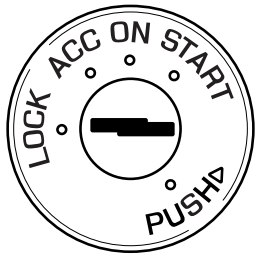

52KM052

The ignition switch has the following four positions:

LOCK
This is the normal parking position. It is the only position in which the key can be removed.

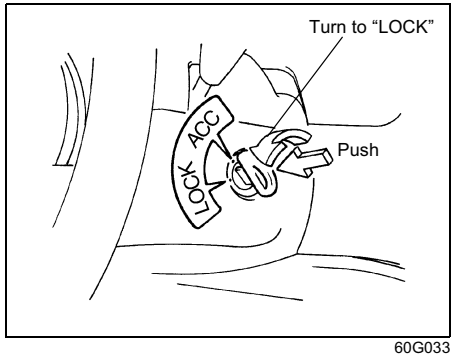

60G033

You must push in the key to turn it to the “LOCK” position. It locks the ignition, and prevents normal use of the steering wheel after the key is removed.

To release the steering lock, insert the key and turn it clockwise to one of the other positions. If you have trouble turning the key to unlock the steering, try turning the steering wheel slightly to the right or left while turning the key.

ACC
Accessories such as the radio can operate, but the engine is off.

ON
This is the normal operating position. All electrical systems are on.

START
This is the position for starting the engine using the starter motor. The key should be released from this position as soon as the engine starts.

Ignition key reminder
A buzzer sounds intermittently to remind you to remove the ignition key if it is in the ignition switch when the driver’s door is opened.

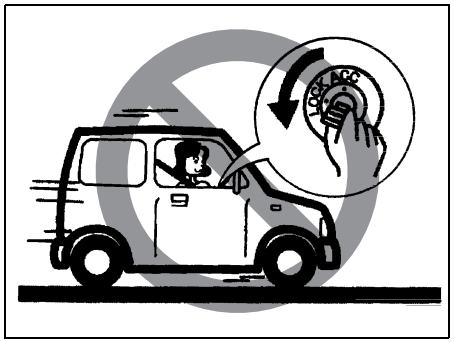

81A297S

⚠ WARNING

- **Never return the ignition switch to “LOCK” position and remove the ignition key while the vehicle is moving. The steering wheel will lock and you will not be able to steer the vehicle.**
- **Always return the ignition switch to “LOCK” position and remove the ignition key when leaving the vehicle even if only for a short time. Also do not leave children alone in a parked vehicle. Unattended children could cause accidental movement of the vehicle or could tamper with power windows. They also could suffer from heat stroke in warm or hot weather. These could result in severe injury or even death.**

NOTICE

- **Do not use the starter motor for more than 30 seconds at a time. If the engine does not start, wait 15 seconds before trying again. If the engine does not start after several attempts, check the fuel and ignition systems or consult your MARUTI SUZUKI dealer.**
- **Do not leave the ignition switch in the "ON" position if the engine is not running as the battery will discharge.**

Engine Switch (Vehicle with Keyless Push Start System)

EXAMPLE

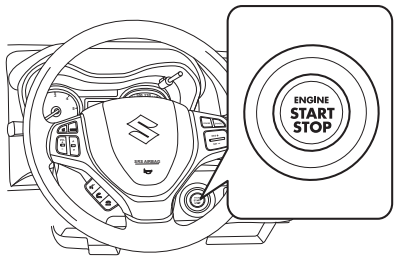

82PH03001

LOCK (OFF)
This mode is for parking the vehicle. When this mode is selected by pressing the engine switch and then any door (including the tailgate) is opened or closed, the steering will be locked automatically.

ACC
Press the engine switch to select this ignition mode to use such electric equipment as the audio system, outside rearview mirrors accessory socket, etc. with the engine off. When this position is selected, the "ACC" indicator light in the instrument cluster comes on. Refer to "Warning and Indicator Lights" in the "BEFORE DRIVING" section for details.

ON

- **With the engine off**
  You can use such electric equipment as the power windows and wipers with the engine off. When this ignition mode is selected by pressing the engine switch, the ignition "ON" indicator light in the instrument cluster will come on.
- **With the engine on**
  All electric equipment is operational. The vehicle can be driven when you have selected this ignition mode by pressing the engine switch.

START
Provided you have the keyless push start system remote controller with you, the engine automatically starts when you press the engine switch to select this ignition mode after shifting to "N" (Neutral) and depressing the brake and clutch pedals.

NOTE:
You do not need to keep the engine switch pressed to start the engine.

NOTICE
Do not leave the engine switch in the "ACC" or "ON" mode when the engine is not running. Avoid using the radio or other electric accessories for a long time when the engine switch is in the "ACC" or "ON" mode when the engine is not running, otherwise the battery may discharge.

NOTE:
- *The steering lock may not be released if some load is acting on the steering wheel. If this happens, turn the steering wheel to the right or left to relieve it from the load before you press the engine switch again to change to the desired ignition mode.*
- *In the presence of strong radio signals or noise, you may not be able to change the ignition mode to "ACC" or "ON" or to start the engine using the engine switch.*

Keyless Push Start System (if equipped)

Provided the keyless push start system remote controller is within the "interior workable area" (refer to the related explanation in this section), you can use the engine switch for starting the engine and selecting an ignition mode ("ACC" or "ON"). In addition, the following functions can be used:

- Keyless entry function. Refer to "Keyless Push Start System Remote Controller" in the "BEFORE DRIVING" section for details.
- Locking and unlocking doors (including the tailgate) using a request switch. Refer to "Keyless Push Start System Remote Controller" in the "BEFORE DRIVING" section for details.
- Immobilizer (anti-theft) function. Refer to "Immobilizer System" in the "BEFORE DRIVING" section for details.

Engine Switch Illumination

The engine switch is illuminated (lit) in the following situations:
- When the engine is off and the driver's door is open, or for 15 seconds after the driver's door is closed. The illumination will fade out after the 15 seconds past.
- When the engine is off and the position lights are on. The illumination will go out when the position lights are turned off.
- When the engine is on and the position lights and/or the headlights are on. The illumination will go out when the position lights and/or the headlights are turned off.

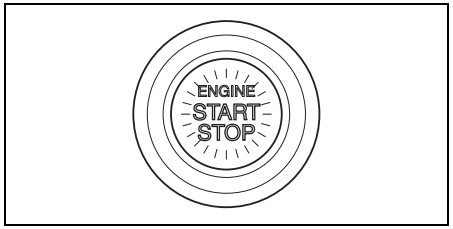

82K253

NOTE:
To save the battery, the illumination will be automatically turned off when both of the following conditions are simultaneously met:
- *The headlights and position lights are turned off.*
- *A period of 15 minutes has elapsed after opening the driver's door.*

Selection of Ignition Modes

Press the engine switch to select the "ACC" or "ON" mode as follows when you use an electric accessory or check the operation of instruments without running the engine.

1) Bring the keyless push start system remote controller with you and sit in the driver's seat.

2) Without depressing the clutch pedal, press the engine switch (1).

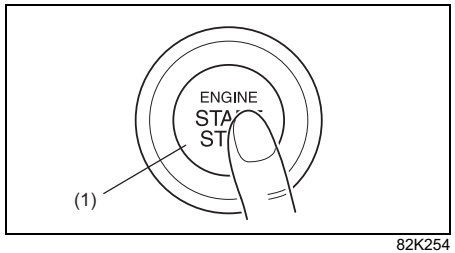

82K254

Every time you press the engine switch, the ignition mode changes as follows.

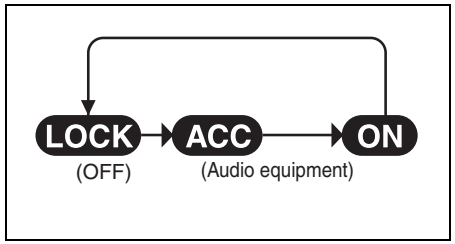

68PH00322

If the "PUSH" indicator light blinks and the ignition modes cannot be selected

Your keyless push start system remote controller may not be sensed as being within the "interior workable area" (refer to the related explanation in this section). Try again after making sure you have the remote controller with you. If the ignition modes still cannot be selected, the battery of the remote controller may be discharged. To be able to select an ignition mode, you must then use the following method:

EXAMPLE

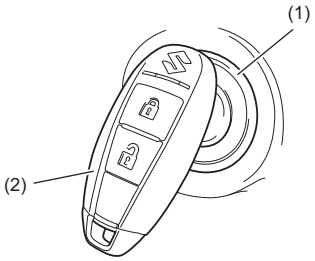

58MST0302

1) Without depressing the brake pedal and the clutch pedal, push the engine switch (1).
2) Within about 10 seconds during which the "PUSH" indicator light in the instrument cluster is blinking, touch the engine switch with the "LOCK" button end of the remote controller (2) for about 2 seconds.

NOTE:

- *If you still cannot select the ignition modes, there may be some problems with the keyless push start system. Contact an authorized MARUTI SUZUKI dealer for an inspection of the system.*
- *The immobilizer keyless push start system warning system light will come on for about 5 seconds while the "PUSH" indicator light is blinking. Refer to "Warning and Indicator Lights" in the "BEFORE DRIVING" section for details.*
- *You may customize the system to cause the interior buzzer to sound once for the "remote controller out of sensing range" warning. To incorporate this customization, please contact an authorized MARUTI SUZUKI dealer.*
- *If the battery of the remote controller is about to become completely discharged, the keyless push start system remote controller battery consumption warning light in the instrument cluster will come on for a few seconds when you press the engine switch to change the ignition mode to "ON". Refer to "Warning and Indicator Lights" in the "BEFORE DRIVING" section for details. For details on replacing the battery, refer to the "Keyless Push Start System Remote Controller" in the "BEFORE DRIVING" section.*

“Remote Controller Outside” Warning

When either of the conditions described below is met, the system issues the remote controller outside warning by sounding the interior and exterior buzzers. At the same time, the immobilizer system light blinks.

- Any door is opened and then closed while the remote controller is not inside the vehicle and the engine is running or the ignition mode has been changed to “ACC” or “ON” by pressing the engine switch.
- The remote controller is not inside the vehicle when you attempt to start the engine after changing the ignition mode to “ACC” or “ON” by pressing the engine switch.

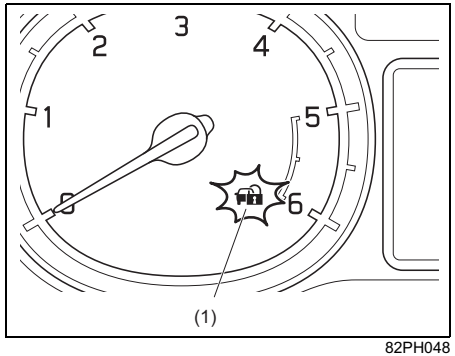

82PH048

(1) Immobilizer keyless push start system warning light (blinks)

NOTE:

- *If the warning is given, locate the remote controller as soon as possible.*
- *Any attempt to start the engine will fail while the warning is active. Blinking of the immobilizer keyless push start system warning light in the instrument cluster will indicate this condition. Refer to “Warning and Indicator Lights” in the “BEFORE DRIVING” section for details.*
- *Normally, the immobilizer keyless push start system warning light should stop blinking shortly after the remote controller is brought back inside the vehicle. If the immobilizer keyless push start system warning light does not stop blinking, change the ignition mode to “LOCK” (OFF) by pressing the engine switch and then perform the engine starting operation. Refer to “Starting the Engine” in this section.*
- *Always keep the remote controller with you as the driver.*

Interior Workable Area for Engine Starting, Ignition Mode Selection and Remote Controller Outside Warning

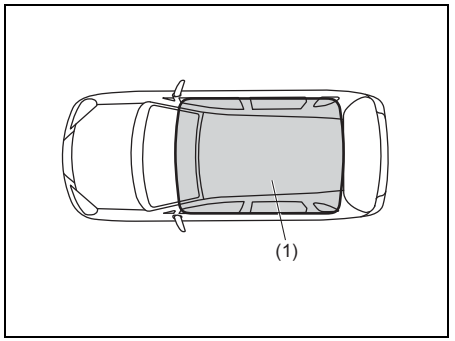

61MM0B002

(1) Interior workable area

The “interior workable area” for these functions is defined as all the interior spaces except for the space above the instrument panel.

NOTE:
- *Even when the remote controller is in the interior workable area, if it is in any of the following conditions, you may not be able to start the engine or select the ignition modes, and the "remote controller outside" warning may be given.*
  - *The remote controller's battery is low.*
  - *The remote controller is affected by strong radio signals or noise.*
  - *The remote controller is in contact with or covered by a metallic object.*
  - *The remote controller is in stowage like the glove box or a door pocket.*
  - *The remote controller is in the sun visor pocket or on the floor.*
- *Even when the remote controller is outside the interior workable area, if it is in any of the following conditions, you may be able to start the engine or select the ignition mode. The "remote controller outside" warning may not be given at that time.*
  - *The remote controller is outside the vehicle but very close to a door.*
  - *The remote controller is on the instrument panel.*

Parking Brake Lever

EXAMPLE

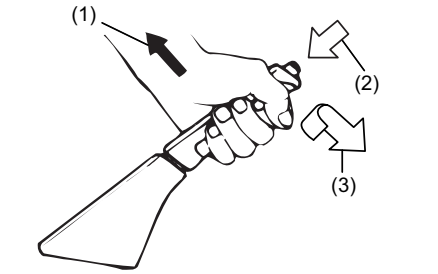

60MHM03001

(1) To set
(2) To release
(3) To release

The parking brake lever is located between the seats. To set the parking brake, hold the brake pedal down and pull the parking brake lever all the way up. To release the parking brake, hold the brake pedal down, pull up slightly on the parking brake lever, push the button on the end of the lever with your thumb, and lower the lever to its original position.

⚠ WARNING

- **Never drive your vehicle with the parking brake on: rear brake effectiveness can be reduced from overheating, brake life may be shortened, or permanent brake damage may result.**
- **If the parking brake does not hold the vehicle securely or does not fully release, have your vehicle inspected immediately by an authorized MARUTI SUZUKI dealer.**

⚠ WARNING

Always set the parking brake fully before leaving your vehicle or it may move, causing injury or damage. When parking, make sure the gearshift lever is in reverse or first gear. Remember, even though the transaxle is in gear, you must set the parking brake fully.

⚠ WARNING

When parking the vehicle in extremely cold weather, the following procedure should be used:
1) Set the parking brake.
2) Turn off the engine, then shift into reverse or first gear.
3) Get out of the vehicle and put chocks under the wheels.
4) Release the parking brake.
When you return to your vehicle, you must remember to first set the parking brake, then remove the wheel chocks.

Parking Brake Reminder Buzzer

A buzzer sounds intermittently to remind you to release the parking brake if you start the vehicle without releasing the parking brake. Make sure that the parking brake is fully released and the brake system warning light turns off.

Pedal

EXAMPLE

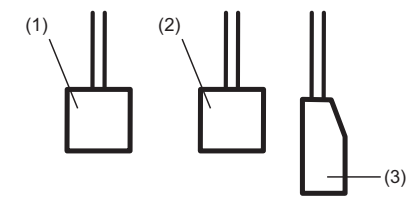

80J2121

Clutch Pedal (1)

The clutch pedal is used to disengage the drive to the wheels when starting the engine, stopping, or shifting the gearshift lever. Depressing the pedal disengages the clutch.

⚠ WARNING

Do not drive with your foot resting on the clutch pedal. It could result in excessive clutch wear, clutch damage, or unexpected loss of engine braking.

Brake Pedal (2)

Your MARUTI SUZUKI vehicle is equipped with front disc brakes and rear drum brakes. Depressing the brake pedal applies both sets of brakes.

You may hear occasional brake squeal when you apply the brakes. This is a normal condition caused by environmental factors such as cold, wet, snow, etc.

⚠ WARNING

If brake squeal is excessive and occurs each time the brakes are applied, you should have the brakes checked by your MARUTI SUZUKI dealer.

⚠ WARNING

Do not “ride” the brakes by applying them continuously or resting your foot on the pedal. This will result in overheating of the brakes which could cause unpredictable braking action, longer stopping distances, or permanent brake damage.

Accelerator Pedal (3)

This pedal controls the speed of the engine. Depressing the accelerator pedal increases power output and speed.

Starting the Engine (Vehicle without Keyless Push Start System)

Before Starting the Engine

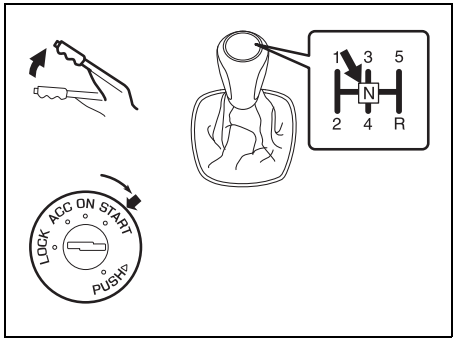

82PH006

1) Make sure the parking brake is set fully.
2) Shift into “N” (Neutral) and depress the clutch pedal all the way to the floor. Hold the clutch pedal while starting the engine.

NOTE:
The engine of a manual transaxle vehicle will not start unless the clutch pedal is depressed.

⚠ WARNING

Make sure that the parking brake is set fully and the transaxle is in Neutral before attempting to start the engine.

Starting a Cold and Warm Engine

Cold engine
Turn the ignition switch to the “ON” position and wait until the glow plug indicator goes out if it comes on. Crank the engine by turning the ignition key to “START”. Release the key when the engine starts.

NOTICE

- **Stop turning the starter immediately after the engine has started or the starter system can be damaged.**
- **Do not crank the engine for more than 30 seconds at a time. If the engine doesn’t start on the first try, wait about 15 seconds before trying again.**

Warm engine
Crank the engine by turning the ignition key to “START”. Release the key when the engine starts.

Caution when stopping the engine with turbocharger
When stopping the engine after climbing or high speed driving, let the engine idle for about one minute or more (if it is not prohibited) to cool down the turbocharger and engine oil. This is to prevent the engine oil from over-deteriorating. Deteriorated engine oil will damage the bearings of the turbocharger.

Restarting diesel engine after fuel-empty stop
If the engine stops and the low fuel warning light and the malfunction indicator light come on, use the following procedure:
1) Fill the fuel tank.
2) Hold the ignition key in “ON” position for 5–10 seconds to feed fuel.
3) Perform above engine starting procedure to start the engine.

If the malfunction indicator light still comes on after the engine started, there may be some problem with the engine. Ask your MARUTI SUZUKI dealer to have the engine inspected.

Starting the Engine (Vehicle with Keyless Push Start System)

Before Starting the Engine

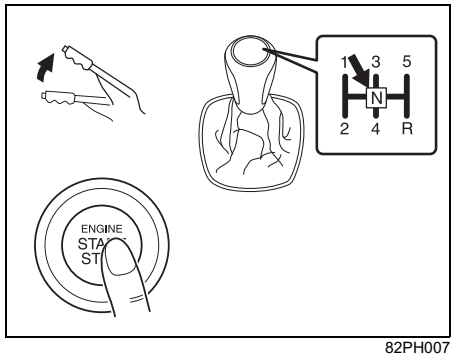

82PH007

1) Make sure the parking brake is set fully.
2) Shift to “N” (Neutral) and fully depress the clutch pedal. Hold the clutch and brake pedals fully depressed.

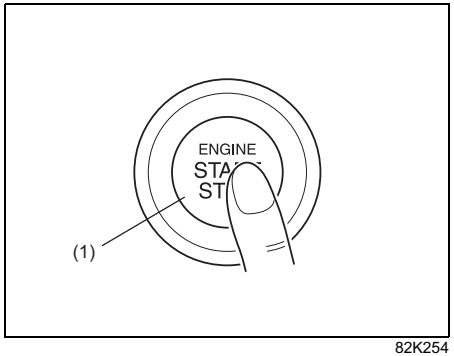

82K254

3) The “PUSH” indicator light in the instrument cluster will come on. Push the engine switch (1). When the engine is started, the starter motor will automatically stop.

⚠ WARNING

Make sure that the parking brake is set fully and the transaxle is in Neutral before attempting to start the engine.

NOTICE

- **Do not depress the accelerator during the engine starting procedure.**
- **If the engine does not respond when you try to start it with the engine switch or if the engine switch repeats cycling through the “LOCK” (OFF) - “ACC” - “ON” mode, the vehicle battery may be discharged. Check the voltage of the vehicle battery before trying again.**

NOTE:

- *You do not need to keep the engine switch pressed to start the engine.*
- *The engine of a manual transaxle vehicle will not start unless the clutch pedal is depressed.*
- *You should turn off such loads as the headlights and air conditioning system to facilitate starting of the engine.*
- *Even if you fail to start the engine, the starter motor will stop turning automatically after a short time. After the starter motor has stopped or if there is some problem with the system, the starter motor will rotate only while the engine switch is being pressed.*

Stopping the Engine

- Depress the engine switch to stop the engine after the vehicle stopped completely.
- In case of emergency, you can stop the engine by quickly pushing the engine switch more than 3 times, or pushing and holding the engine switch more than 2 seconds while the vehicle in motion.

NOTE:
Except in emergency, do not stop the engine while the vehicle in motion.
The steering and braking operation will require more efforts when the engine stopped.
Refer to "Braking" in this section.

- If the engine has been stopped and stayed as it as for while after the engine was stopped unexpectedly or was raced before stopped, a clicking sound may be heard from around the engine when engine restarted. This is not a malfunction. In this case, always let the engine idle before stop it.

Starting a Cold and Warm Engine

Cold engine
Depress the clutch and brake pedals fully and press the engine switch to crank the engine. If the glow plug indicator light comes on, the engine will start automatically after the glow plug indicator light goes off or 10 seconds past.

NOTICE

Do not crank the engine for more than 30 seconds at a time.
If the engine doesn't start on the first try, wait about 15 seconds before trying again.

Warm engine
Crank the engine by pressing the engine switch to change the ignition mode to "START".

Caution when stopping the engine with turbocharger
When stopping the engine after climbing or high speed driving, let the engine idle for about one minute or more (if it is not prohibited) to cool down the turbocharger and engine oil. This is to prevent the engine oil from over-deteriorating. Deteriorated engine oil will damage the bearings of the turbocharger.

Restarting diesel engine after fuel-empty stop
If the engine stops and the low fuel warning light and the malfunction indicator light come on, use the following procedure:
1) Fill the fuel tank.
2) Press the engine switch to change the ignition mode to "ON" for 5-10 seconds to feed fuel.
3) Perform above engine starting procedure to start the engine.

If the malfunction indicator light still comes on after the engine started, there may be some problem with the engine. Ask your MARUTI SUZUKI dealer to have the engine inspected.

If the "PUSH" indicator light blinks and the engine cannot be started
Your keyless push start system remote controller may not be sensed as being within the interior workable area. Try again after making sure that you have the remote controller with you. If the engine still cannot be started, the battery of the remote controller may be discharged. You must then use the following method to be able to start the engine.

EXAMPLE

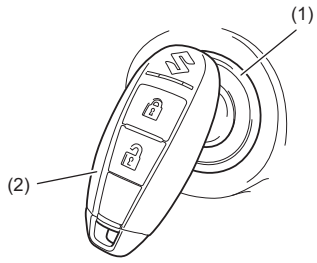

58MST0302

1) Make sure the parking brake is set fully.
2) Shift to “N” (Neutral) and fully depress the clutch pedal. Hold the clutch and brake pedals fully depressed.
3) The “PUSH” indicator light in the instrument cluster will come on. Press the engine switch (1).
4) Within about 10 seconds of blinking of the “PUSH” indicator light in the instrument cluster, touch the engine switch with the “LOCK” button end of the remote controller (2) for about 2 seconds.

NOTE:
- *If you still cannot start the engine after several attempts using the above method, there may be a problem elsewhere, such as a low battery. Contact your MARUTI SUZUKI dealer for inspection.*
- *The immobilizer keyless push start system warning light will come on for about 5 seconds while the “PUSH” indicator light is blinking.*
- *You may customize the system to cause the interior buzzer to sound once for the “remote controller out of sensing range” warning. Please contact an authorized MARUTI SUZUKI workshop for the customisation.*
- *If the battery of the remote controller is about to be completely discharged, the keyless push start system remote controller battery consumption warning light in the instrument cluster will come on for a few seconds when the ignition mode is changed to ON by pressing the engine switch. For details on replacing the battery, refer to the “Keyless Push Start System Remote Controller” in the “BEFORE DRIVING” section.*

Returning the Ignition Mode to LOCK (OFF)

LOCK (OFF) mode reminder buzzer

If the driver’s door is opened without returning the ignition mode to “LOCK” (OFF) by pressing the engine switch, a buzzer sounds to warn you of this state.

- If you open the driver’s door after pressing the engine switch to change the ignition mode to “ACC”, the interior buzzer beeps intermittently.
- The buzzer will stop sounding if you then push the engine switch twice, thus bringing it back the ignition mode to “LOCK” (OFF).

NOTE:
Whenever you leave the vehicle, make sure you have returned the ignition mode to “LOCK” (OFF) using the engine switch and then lock the doors. Without returning the ignition mode to “LOCK” (OFF), you cannot use a request switch or keyless push start system remote controller to lock the doors.

Steering lock warning buzzer
If the steering lock fails to engage due to a fault in the system when the ignition mode is turned to “LOCK” (OFF) by pressing the engine switch and then any door (including the tailgate) is opened or closed, the interior buzzer will warn you of this condition with repeated short beeps. If this happens, have the vehicle inspected by an authorized MARUTI SUZUKI dealer.

Using the Transaxle

Manual Transaxle

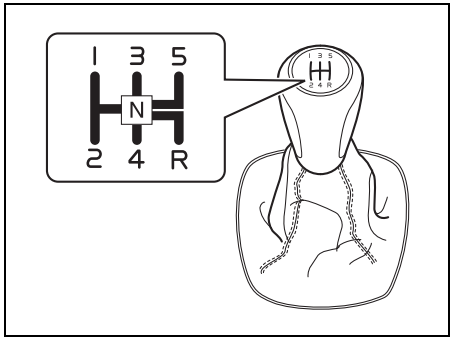

79MH0303

Starting off
To start off, depress the clutch pedal all the way to the floor and shift into 1st gear. After releasing the parking brake, gradually release the clutch. When you hear a change in the engine’s sound, slowly press the accelerator while continuing to gradually release the clutch.

Shifting
All forward gears are synchronized, which provides for quiet and easy shifting. Always push in the clutch pedal fully before shifting gears. Keep the engine speed so it does not vise into the red zone of the tachometer.

Downshifting maximum allowable speeds

Downshifting	km/h
2nd to 1st	35
3rd to 2nd	65
4th to 3rd	100
5th to 4th	145

**NOTE:*
You may not accelerate to the maximum allowable speed because of the driving situation and/or the vehicle condition.

NOTICE
When downshifting to a lower gear, make sure not to downshift at the speed faster than the maximum allowable speeds, or severe engine damage can result.

Keep the engine speed so it does not get into the red zone of tachometer.

⚠ WARNING

- **Reduce your speed and downshift to a lower gear before going down a long or steep hill. A lower gear will allow the engine to provide braking. Avoid riding the brakes or they may overheat, resulting in brake failure.**
- **When driving on slippery roads, be sure to slow down before downshifting. Excessive and/or sudden changes in engine speed may cause loss of traction, which could cause you to lose control.**

NOTICE

Make sure that the vehicle is completely stationary before you shift into reverse.

NOTICE

- **To help avoid clutch damage, do not use the clutch pedal as a footrest while driving or use the clutch to keep the vehicle stationary on a slope. Depress the clutch fully when shifting.**
- **When shifting or starting off, do not race the engine. Racing the engine can shorten engine life and affect smooth shifting.**

Gearshift Indicator (if equipped)

EXAMPLE

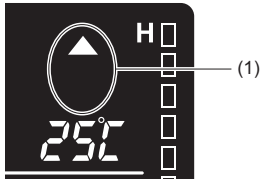

82PH064

(1) Gearshift indicator

In the following cases, the gearshift indicator is indicated on the information display while the vehicle is running.

- When the gearshift lever is in a position other than “N” (Neutral).
- For vehicles equipped with the cruise control, when the system is not in use.

The electronic control system monitors driving condition (such as vehicle speed and/or engine revolution), and it shows which gear position is optimal for your driving with the indication on the display.

If UP/DOWN arrow is indicated on the display while driving, we recommend you to shift up or down the gear until the arrow goes off. It is the optimal gear position for a driving condition that reduces the over revolution and stress to the engine, and improves fuel consumption.

For details on how to use the transaxle, refer to “Using the Transaxle” in this section.

⚠ WARNING

The gearshift indicator is designed to indicate optimal gear position for your driving, however, a driver will not be relieved from the duty of care of driving operation or gear change with this indicator.
To drive safe, do not gaze the gearshift indicator, pay attention to your driving situation and shift up or down if necessary.

NOTE:
- *The gearshift indicator is not indicated when the gear position is in "N" (Neutral).*
- *If you depress the clutch pedal while UP/DOWN arrow is indicated, the indication will disappear.*
- *If you release your foot from the accelerator pedal while UP arrow is indicated, the UP arrow will go off.*
- *The indication of gearshift indicator timing may differ depending on the vehicle condition and/or driving situation even in the same vehicle speed and engine revolution.*

Example of the gearshift indicator

Indication	Description
▲	Lower gear position is selected for the vehicle speed and/or engine revolution. Changing to a higher gear position is recommended.
●	Current gear position is optimal for the vehicle speed and/or engine revolution.
▼	Higher gear position is selected for the vehicle speed and/or engine revolution. Changing to a lower gear position is recommended.

Cruise Control (if equipped)

The cruise control system allows you to maintain a steady speed without keeping your foot on the accelerator pedal. The controls for operating the cruise control system are on the steering wheel.

You can use the cruise control system with the following conditions:
- The gear position is in 3rd, 4th or 5th.
- The vehicle speed is about 40 km/h or higher.

⚠ WARNING

To help avoid loss of vehicle control, do not use the cruise control system when driving in heavy traffic, on slippery or winding roads, or on steep gradient.

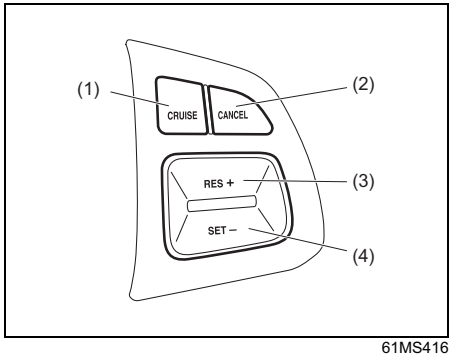

61MS416

(1) "CRUISE" switch
(2) "CANCEL" switch
(3) "RES +" switch
(4) "SET –" switch

To Set Cruising Speed

1) Turn on the cruise control system by pushing the “CRUISE” switch (1). When the “CRUISE” indicator light comes on, you can set cruising speed.
2) Accelerate or decelerate to the desired speed.
3) Push the “SET –” switch (4) and turn on the “SET” indicator light. Take your foot off the accelerator pedal and the set speed will be maintained.

⚠ WARNING

If the cruising speed is set by accidentally set, you cannot decelerate or could loose control of the vehicle. This could lead to an accident, resulting in severe injury or death.
Turn off the cruise control system and make sure the “CRUISE” indicator light is off when the system is not in use.

“CRUISE” Indicator Light

52D113

When you push the “CRUISE” switch, the system is on and a “CRUISE” indicator light on the instrument cluster comes on.

“SET” Indicator Light

65D474

When the vehicle’s speed is controlled by the cruise control system, a “SET” indicator light on the instrument cluster comes on.

To Change Speed Temporarily

When the cruising speed is maintained, you can temporarily accelerate or decelerate.

To accelerate, depress the accelerator pedal. When you take your foot off the pedal, your vehicle will return to the set speed.

To decelerate, depress the brake pedal. The set speed will be canceled and “SET” indicator light will go off.
To resume the previously set speed, push the “RES +” switch (3) and “SET” indicator light will be turned ON again when vehicle speed is above 40 km/h. The vehicle will accelerate to and maintain the previously set speed.

To Change Cruising Speed

Using the accelerator pedal
To reset at a faster cruising speed, accelerate to the desired speed using the accelerator pedal and push the “SET –” switch (4). The new speed will be maintained.

Using the brake pedal
To reset at a slower cruising speed, decelerate to the desired speed using the brake pedal and push the “SET –” switch (4). The new speed will be maintained.

NOTE:
When the brake pedal is depressed, the “SET” indicator light goes off until reset the cruising speed.

Using the “RES +” switch or the “SET –” switch
To reset at a faster cruising speed, press repeatedly or hold push the “RES +” switch (3). Vehicle speed will steadily increase. When you release the switch, the new speed will be maintained.

To reset at a slower cruising speed, press repeatedly or hold push the “SET –” switch (4) until the vehicle has slowed to the desired speed, then release the switch. The new speed will be maintained.

NOTE:
You can adjust the set speed by approximately 1.6 km/h by pushing the “RES +” switch (3) or the “SET –” switch (4) quickly.

Cancellation of the Cruise Control

The “SET” indicator light will go off and the cruise control will be cancelled temporarily with following procedures:

- Push the “CANCEL” switch (2).
- Depress the brake pedal.
- Depress the clutch pedal.
- The vehicle speed falls more than about 20 percent from the set speed.
- Any time the vehicle speed falls below 40 km/h.

To resume the previously set speed, push the “RES +” switch (3) and “SET” indicator light will be turned ON Besides, the vehicle speed has to be above 40 km/h when the vehicle is not in the above conditions.

To turn off the cruise control system, push the “CRUISE” switch (1) and make sure the “CRUISE” indicator light is off.
Also, if the malfunction indicator light in the instrument cluster comes on or blinks, the cruise control system will be turned off.

NOTE:
If you turn off the cruise control system, the previously set speed in the memory is cleared. Reset your cruising speed again.

Parking Sensors (if equipped)

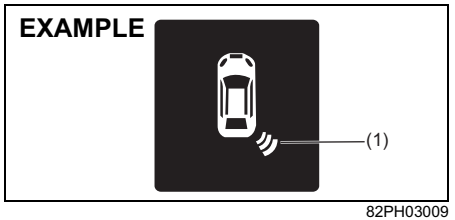

82PH03009

(1) Symbol representing an obstacle detected by parking sensor*

* This symbol represents an obstacle that is located to the right rear of the vehicle.

- The parking sensor system uses ultrasonic sensors to detect obstacles near the rear bumper. If obstacles are sensed while you are parking or moving the vehicle slowly / In reverse gear, the system warns you by sounding a buzzer and displaying symbols representing the obstacles on the information display in the instrument cluster.
- The system emits an ultrasonic wave and the relevant sensor detects the return of the wave reflected by an obstacle. The system measures the time taken by the ultrasonic wave to reach the obstacle and return from it, from which it determines the obstacle’s position.
- The parking sensor function can be used when you turn the ignition switch to the “ON” position or press the engine switch

to change the ignition mode to ON, the gearshift lever is in “R” position and the parking sensor switch is in the ON position. This function is helpful in the following cases: pulling over to the curb; parallel-parking the vehicle; steering the vehicle into a garage; driving along an alley; and moving slowly in a place with obstacles.

⚠ WARNING

- **The parking sensor warns you of obstacles with buzzers and by showing you the location of the obstacles on the information display. However, you must still pay full attention yourself while driving.**
- **The sensors can detect obstacles only within a limited area and only when the vehicle is moving within a limited speed range. So, in tricky areas, you must move the vehicle slowly while checking around it using your direct vision or rearview mirrors. There is increased risk of an accident if you control the vehicle relying only on the parking sensor.**

NOTICE

- **Parking sensor are only for driver’s assistance.**

Sensor Locations

On the rear bumper

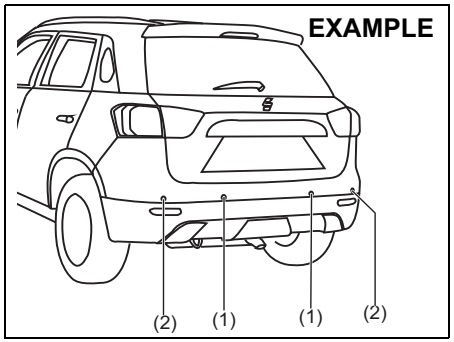

82PH03002

(1) Rear center sensors (2 places)
(2) Rear corner sensors (2 places)

NOTICE

- **Avoid hitting the sensor areas or directing the nozzle of a high-pressure car washer onto the sensor areas. Otherwise, the sensors may be damaged.**
- **If the bumper hits a hard object, the sensors on it may not work properly. If this occurs, have the sensors inspected by an authorized MARUTI SUZUKI dealer.**

Working sensors

The sensors that work depends on the position of the gearshift lever as follows:

Gearshift lever position		R	N, 1st – 5th
Rear sensors	Center	On	Off
	Corner	On	Off

Approximate areas where obstacles can be detected

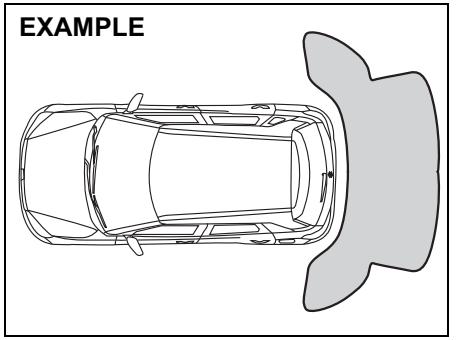

82PH03003

- The sensors can detect an obstacle up to about 1.5 m (5 ft) from the rear of vehicle.

NOTE:
An obstacle within about 20 cm (8 in) from a sensor or just below a sensor may not be detectable.

⚠ WARNING

- **Under the following conditions, the parking sensor system may not work normally because the sensors cannot detect obstacles correctly.**
  - **– Sensors are covered with mud, ice or other materials. (Such materials must be removed for normal operation.)**
  - **– Sensors are wet from water splashes or heavy rain.**
  - **– Sensors are covered by a hand, sticker, accessory, etc.**
  - **– There is an accessory or other object attached within the sensor's sensing area.**
  - **– Items such as tow hooks, commercially available corner poles, radio antenna, etc. are installed on the bumper.**
  - **– The height of the bumper is changed due to alteration to the suspension or other causes.**
  - **– The sensor areas are extremely hot from direct sunlight or cold due to freezing weather.**
  - **– The vehicle is on a rough surface, slope, gravel road or grass field.**
  - **– The vehicle is at a steep angle.**

(Continued)

⚠ WARNING

(Continued)

- **– Sensors have intercepted ultrasonic noise from another vehicle's horn, engine, air braking system (large vehicles), or parking sensor.**
- **– Obstacles are too close to the sensors.**
- **– Sensors are at an angle to a highly reflective object such as glass. (Ultrasonic waves are not reflected back from the obstacle.)**

- **Sensors may not be able to correctly detect the following types of obstacles:**
  - **– Objects made of a thin material like wire netting and ropes**
  - **– Square-shaped curbstones or other objects with sharp edges**
  - **– Tall objects with a large upper part like a road sign**
  - **– Low-profile objects such as curbstones**
  - **– Sound-absorbing objects such as cotton and snow**

NOTE:

- *Thin poles or obstacles lower than the sensors may become undetectable as the vehicle moves closer to them even if they have been detected from longer distances.*
- *The system may calculate the distance to a road sign or similar obstacle to be shorter than the actual distance.*

How to Use the Parking Sensor

Parking sensor switch

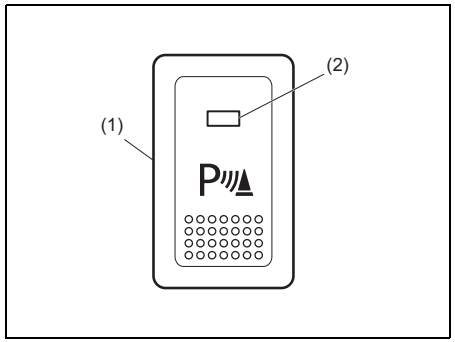

61MS403

(1) Parking sensor switch
(2) Indicator

- When the ignition switch is in the “ON” position or the ignition mode is ON, and the indicator light in the parking sensor switch is on, indicating that the parking sensor is ready for operation under the following conditions:
  – The gearshift lever is in “R” position.
  – The vehicle’s forward moving speed is not more than approx. 9 km/h when decelerating the vehicle such as for parking.
  – The vehicle’s forward moving speed is not more than approx. 13 km/h when accelerating.
- To deactivate the parking sensor, push the parking sensor switch and make sure the indicator light goes off.

Switch position	State
EXAMPLE	ON • When the indicator light is on and all necessary conditions are met, system becomes ready for operation.
EXAMPLE	OFF • The system does not operate. Push the switch to turn off the indicator if you do not wish to use the parking sensor.

NOTE:
If you push the parking sensor switch from the OFF to ON position when the ignition switch has been turned to the "ON" position or the ignition mode has been changed to ON by pressing the engine switch, the inside buzzer sounds.

Obstacle Indication by Parking Sensor

EXAMPLE

(2) (1) (2)

82PH063

(1) Obstacle detected by rear center sensors
(2) Obstacle detected by rear corner sensors

Upon detecting an obstacle, the parking sensor causes an interior buzzer to sound and a symbol representing the obstacle appears on the information display in the instrument cluster.

- A different symbol is displayed depending on the direction and distance of the obstacle.
- A buzzer sounds when a sensor at the rear detects an obstacle.
- Warnings when obstacles are detected by corner sensors

Distance (approx.)	Buzzer	Symbol
45 – 60 cm (18 – 24 in)	Short beeps at short intervals	Three lines
35 – 45 cm (14 – 18 in)	Short beeps at very short intervals	Two lines
Less than 35 cm (14 in)	Continuous beep	One line

- Warnings when obstacles are detected by center sensors

Distance (approx.)	Buzzer	Symbol
60 – 150 cm (24 – 59 in)	Short beeps at long intervals	Three lines
45 – 60 cm (18 – 24 in)	Short beeps at short intervals	
35 – 45 cm (14 – 18 in)	Short beeps at very short intervals	Two lines
Less than 35 cm (14 in)	Continuous beep	One line

NOTE:

- *Symbols are displayed with a short delay after the detection of obstacles.*
- *If the system detects multiple obstacles simultaneously, the display shows all of their positions using the corresponding symbols. However, the buzzers will sound only for the nearest obstacles.*

Warning and Indicator Messages

If there is a problem or warning regarding the parking sensor system, a message is displayed on the information display in the instrument cluster, and a symbol blinks and the buzzer sounds. If a message is displayed, follow its instruction.

Text Message	Symbol	Buzzer	Probable cause and remedy
82PH03011	82PH03013 Two Blinking lines in a sensor location.	Series of Double Beeps	There may be some problem with the parking sensor system. Have your vehicle inspected by an authorized MARUTI SUZUKI dealer.
82PH03012	82PH03014 One blinking line in a sensor location.	Series of Single Beeps	The indicated sensor is contaminated. Clean the sensor with a soft cloth.
No text indication	82PH03015 All line blinking in sensor location.	No Buzzer Beeps	There may be some problem with the parking sensor system. Have your vehicle inspected by an authorized MARUTI SUZUKI dealer.

Rearview Camera (if equipped)

When the gearshift lever is shifted to the “R” position while the ignition mode is “ON”, the rearview camera system automatically shows the view behind the vehicle on the display.

⚠ WARNING

The distance viewed in the rearview camera may differ from the actual distance according to the condition of road or the load the vehicle is carrying. Since the camera display area is also limited, backing up by only looking at the display may cause an accident or a collision with an object. The rearview camera cannot replace the driver’s attention. The driver alone is responsible for parking and similar driving maneuvers.

- **Use the rearview camera only to provide driving assistance.**
- **Always drive carefully confirming the safety of the rear and the surrounding conditions by looking directly with your eyes and using the rear view mirror.**
- **Make sure that the tailgate is securely closed when backing up.**

NOTICE

If you use the rearview camera for a long time when the ignition mode is ON, but the engine is not running, the battery may discharge.
Do not leave the ignition mode ON for a long time when the engine is not running.

Rearview Camera Location

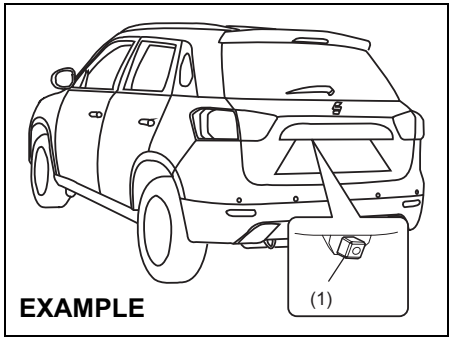

82PH03004

(1) Rearview camera

The rearview camera is installed beside the license plate light.

NOTICE

The rearview camera is a precision instrument. If you strike the camera, it may be broken and cause damage resulting in a catching fire or a malfunction.

- **Do not strike the camera.**
- **Do not remove snow or mud on the camera lens with a stick.**

NOTICE

If water enters the rearview camera, it may cause a malfunction or catching fire.
Do not use high pressure water around the camera.

NOTICE

This lens is hard coated to prevent damage or discoloration. Damage or discoloration of lens may obscure the image.
- **Do not use a brush to clean lens.**
- **Do not use alcohol, benzene or thinner to clean the lens.**
- **Do not use wax on the camera lens.**

NOTE:
If body wax does get on the camera lens, wipe off the wax with a clean cloth dampened with mild detergent diluted with water, then wipe with a dry cloth.

How to Use Rearview Camera

1) Press the engine switch to change the ignition mode to ON.
2) Shift the gearshift lever in the “R” position.
   - The display automatically shows the view behind the vehicle.
   - When the gearshift lever is shifted from “R” to another gearshift lever position, the display returns to the previous display.

NOTE:
The rearview camera display has first priority in any display mode. However, the rearview camera display does not show the rear view while the system is initializing.

Display Range of Rearview Camera

The rearview camera display shows the area behind the rear end of the tailgate. The display cannot show objects which are close to the bumper or under the bumper.
The rearview camera display cannot show obstacles which are higher than the camera. Upper parts of tall objects such as road signs cannot be viewed on the display.

Example of display range of rearview camera

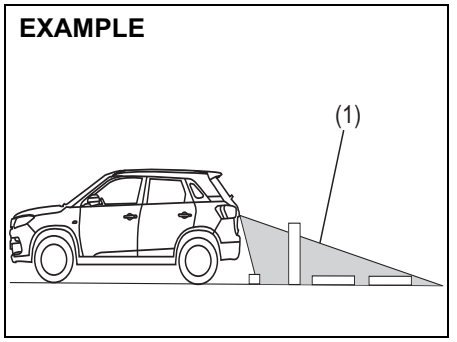

82PH03005

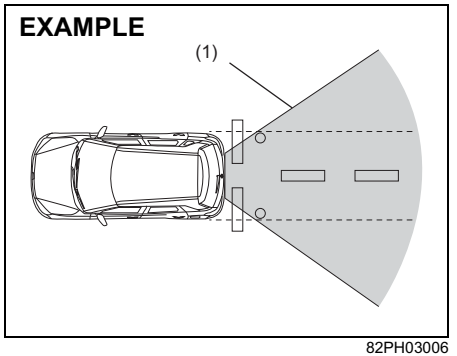

82PH03006

(1) Display range

NOTE:
- *Images shown on the display from the rearview camera are reversed images (mirror images).*
- *The colors of objects on the rearview camera may differ from the actual object colors.*
- *The rearview camera display may be difficult to see under the following conditions, but this is not a system malfunction.*
  – *In dark areas, on a rainy day or at night.*
  – *When the temperature around the lens is too high/low, or the camera is wet such as on a rainy day or during periods of high humidity (dew condensation may occur on the camera lens).*
  – *When a foreign object such as mud or a drop of water is stuck around the camera lens.*
  – *When strong light directly enters the camera (vertical lines may be seen on the display).*
  – *Under fluorescent light. (The display may flicker.)*
  – *When the outside temperature is low (the image on the display may be darkened).*

Example of rearview camera screen indication

The distance viewed in the rearview camera may differ from the actual distance according to the condition of the road or the load the vehicle is carrying.

Uphill Incline behind the Vehicle

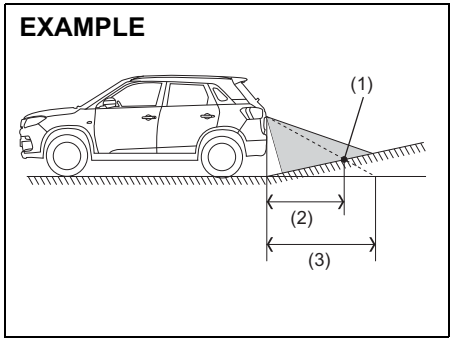

82PH03007

(1) Object
(2) Actual distance
(3) Distance on the display

When there is an uphill incline behind the vehicle, the object shown on the display appears farther away than the actual distance.

Downhill Incline behind the vehicle

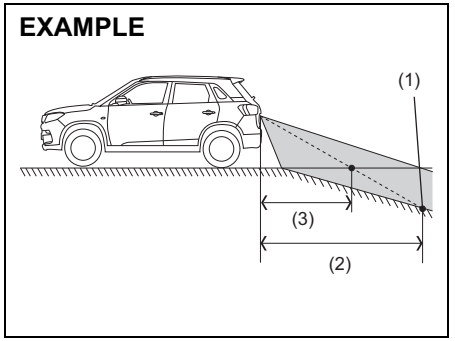

82PH03008

(1) Object
(2) Actual distance
(3) Distance on the display

When there is a downhill incline behind the vehicle, the object shown on the display appears closer than the actual distance.

If the rear view from the rearview camera is not shown or there is a poor image

- If the rear view from the rearview camera is not shown.
  – Check to make sure that the ignition mode is ON.
  – Check to make sure that the gearshift lever is shifted to the “R” position.

- If the image from the rearview camera is poor.
  – Check to make sure that the camera lens is not dirty.
  – Check to make sure that light from the sun or the beam of the headlights from the vehicle behind is not shining directly into the lens.

If the rearview camera system is still not working properly after checking the above, have the system inspected by an authorized MARUTI SUZUKI dealer as soon as possible.

Braking

EXAMPLE

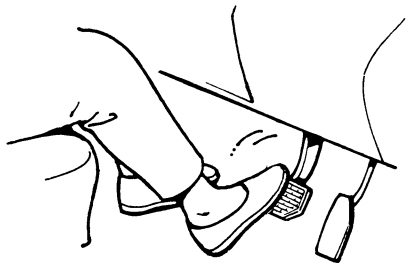

60G165S

The distance needed to bring any vehicle to a halt increases with the speed of the vehicle. The braking distance needed, for example, at 60 km/h will be approximately 4 times greater than the braking distance needed at 30 km/h. Start to brake the vehicle when there is plenty of distance between your vehicle and the desired stopping point, and slow down gradually.

⚠ WARNING

If water gets into the brake drums, brake performance may become poor and unpredictable.
After driving through water or washing the underside of the vehicle, test the brakes while driving at a slow speed to see if they have maintained their normal effectiveness. If the brakes are less effective than normal, dry them by repeatedly applying the brakes while driving slowly until the brakes have regained their normal effectiveness.

Power-Assisted Brakes

Your vehicle has power-assisted brakes. If power assistance is lost due to a stalled engine or other failures, the system is still fully operational on reserve power and you can bring the vehicle to a complete stop by pressing the brake pedal once and holding it down. The reserve power is partly used up when you depress the brake pedal and reduces each time the pedal is pressed. Apply smooth and even pressure to the pedal. Do not pump the pedal.

⚠ WARNING

Even without reserve power in the brake system, you can still stop the vehicle by pressing the brake pedal harder than normally required. However, the stopping distance may be longer.

Anti-Lock Brake System (ABS) (if equipped)

ABS will help you avoid skidding by electronically controlling braking pressure. It will also help you maintain steering control when braking on slippery surfaces or when braking hard.

The ABS works automatically, so you do not need any special braking technique. Just push the brake pedal down without pumping. The ABS will operate whenever it senses that the wheels are locking up. You may feel the brake pedal moves a little while the ABS is operating.

NOTE:
The ABS will not work if vehicle speed is under about 10 km/h.

⚠ WARNING

- **On some types of loose surfaces (such as gravel, snow-covered roads, etc.) the stopping distance required for an ABS-equipped vehicle may be slightly greater than for a comparable vehicle with a conventional brake system. With a conventional brake system, skidding tires are able to plow the gravel or snow layer, shortening the stopping distance, ABS minimizes this resistance effect. Allow for extra stopping distance when driving on loose surfaces.**
- **On regular paved roads, some drivers may be able to obtain slightly shorter stopping distances with conventional brake systems than with ABS.**
- **In both of the above conditions, ABS will still offer the advantage of helping you maintain directional control. However, remember that ABS will not compensate for bad road or weather conditions or poor driver judgment. Use good judgment and do not drive faster than conditions will safely allow.**

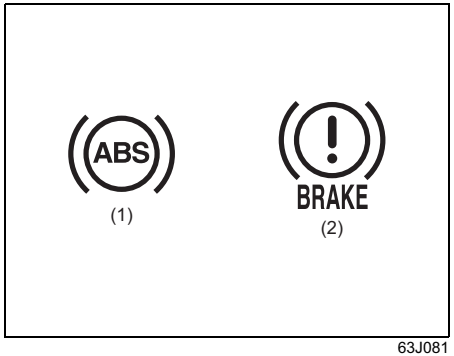

63J081

(1) ABS warning light
(2) Brake system warning light

⚠ WARNING

- **If the ABS warning light (1) on the instrument panel comes on and stays on while driving, there may be a problem with the ABS system. Ask your MARUTI SUZUKI dealer to inspect the ABS system immediately. If the ABS system becomes inoperative, the brake system will function as an ordinary brake system that has no ABS.**

(Continued)

⚠ WARNING

(Continued)

- **If the ABS warning light (1) and the Brake system warning light (2) on the instrument panel simultaneously stays on or comes on when driving, both anti-lock function and rear brake force control function (proportioning valve function) of the ABS system may have failed. If so, the rear wheels may easily skid or the vehicle can even spin in the worst case when braking on a slippery road or when hard braking even on a dry paved road. Ask your MARUTI SUZUKI dealer to inspect the ABS system immediately. Drive carefully, avoiding hard braking as much as possible.**

How the ABS Works

A computer continuously monitors wheel speed. The computer compares the changes in wheel speed when braking. If the wheels slow suddenly, indicating a skidding situation, the computer will change braking pressure several times each second to prevent the wheels from locking. When you start your vehicle after a stop you may hear a momentary motor noise as the system checks itself.

⚠ WARNING

The ABS may not work properly if tires or wheels other than those specified in the owner's manual are used. This is because the ABS works by comparing changes in wheel speed. When replacing tires or wheels, use only the size and type specified in this owner's manual.

DRIVING TIPS

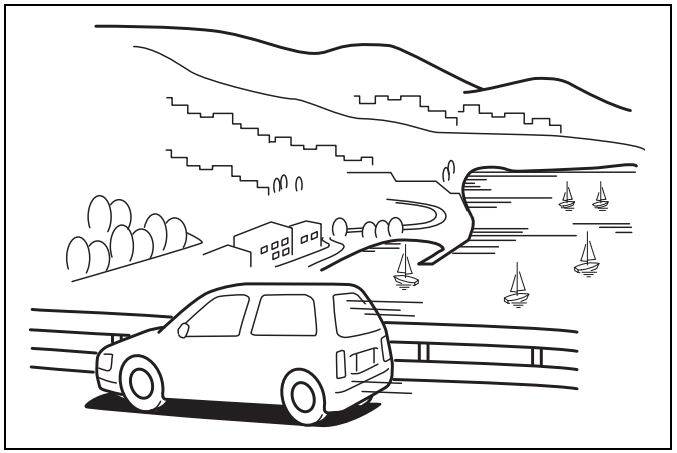

60G409

Running-in 4-1
Catalytic Converter 4-1
Improving Fuel Economy 4-2
Highway Driving 4-3
Driving on Hills 4-3
Driving on Slippery Roads 4-4
Driving on Wet Roads 4-5
Do's and Dont's for Safe Driving 4-6
Margin for Safety 4-8

EXAMPLE

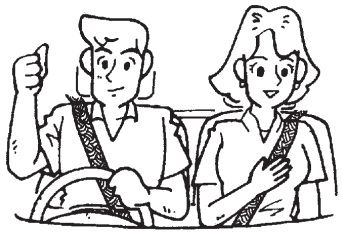

67LM4001

⚠ WARNING

- **WEAR YOUR SEAT BELTS AT ALL TIMES. Even though air bags are equipped at the front seating positions, the driver and all passengers should be properly restrained at all times, using the seat belts provided. Refer to the "Seat Belts and Child Restraint Systems" section for instructions on proper use of the seat belts.**
- **Never drive while under the influence of alcohol or other drugs. Alcohol and drugs can seriously impair your ability to drive safely, greatly increasing the risk of injury to yourself and others. You should also avoid driving when you are tired, sick, irritated, or under stress.**

Running-in

NOTICE

The future performance and reliability of the engine depends on the care and restraint exercised during its early life. It is especially important to observe the following precautions during the initial 960 km of vehicle operation.

- **After starting, do not race the engine. Warm it up gradually.**
- **Avoid prolonged vehicle operation at a constant speed. Moving parts will break in better if you vary your speed.**
- **Start off from a stop slowly. Avoid full throttle starts.**
- **Avoid hard braking, especially during the first 320 km of driving.**
- **Do not drive slowly with the transaxle in a high gear.**
- **Drive the vehicle at moderate engine speeds.**
- **Do not tow a trailer.**

Catalytic Converter

EXAMPLE

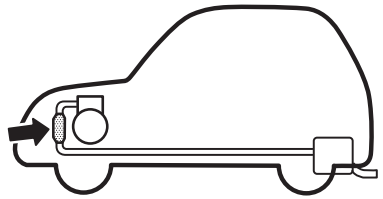

80G106

The purpose of the catalytic converter is to minimize the amount of harmful pollutants in your vehicle's exhaust. Use of leaded fuel in vehicles equipped with catalytic converters is prohibited, because lead deactivates the pollutant-reducing components of the catalyst system.

The converter is designed to last the life of the vehicle under normal usage and when unleaded fuel is used. No special maintenance is required on the converter. However, it is very important to keep the engine properly tuned. Engine misfiring, which can result from an improperly tuned engine, may cause overheating of the catalyst. This may result in permanent heat damage to the catalyst and other vehicle components.

NOTICE

To minimise damaging the catalyst or other vehicle damage:

- **Maintain the engine in the proper operating condition.**
- **In the event of an engine malfunction, particularly one involving engine misfiring or other apparent loss of performance, have the vehicle serviced promptly.**
- **Do not turn off the engine or interrupt the ignition when the transaxle is in gear and the vehicle is in motion.**
- **Do not try to start the engine by pushing or towing the vehicle, or coasting down a hill.**
- **Do not idle the vehicle for prolonged periods if idling seems rough or there are other malfunctions.**
- **Do not allow the fuel tank to get near the empty level.**
- **Avoid driving your vehicle at excessively high engine speed in or around the red zone of the tachometer.**

EXAMPLE

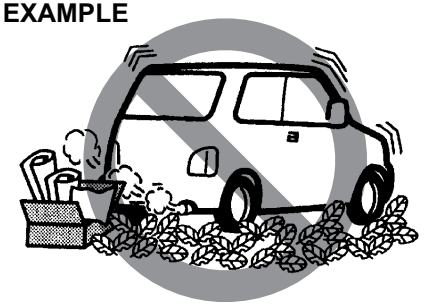

54G584S

⚠ WARNING

Be careful about where you park and drive; the catalytic converter and other exhaust components can get very hot. As with any vehicle, do not park or operate this vehicle in areas where combustible materials such as dry grass or leaves can come in contact with a hot exhaust system.

Improving Fuel Economy

The following instructions will help you improve fuel economy.

Avoid excessive idling
If you are to wait for more than a minute while you are parked, stop the engine and start it again later. When warming up a cold engine, do not allow the engine to idle or apply full throttle until the engine has reached operating temperature. Allow the engine to warm up by driving.

Avoid sudden acceleration
Sudden acceleration starting from rest or while driving will consume fuel unnecessarily and shorten engine life. Start off slowly.

Avoid unnecessary stops
Avoid unnecessary deceleration and stopping. Try to maintain a slow, steady speed whenever possible. Slowing down and then accelerating again uses more fuel.

Keep a steady cruising speed
Keep as constant a speed as road and traffic conditions will permit.

Keep the air cleaner clean

EXAMPLE

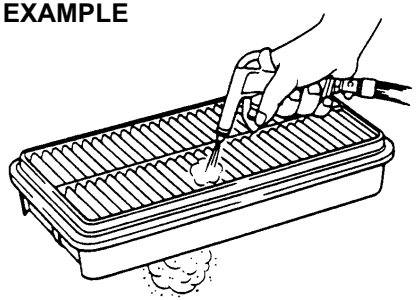

60A183S

If the air cleaner is clogged with dust, there will be greater intake resistance, resulting in decreased power output and increased fuel consumption.

Keep weight to a minimum
Heavier the load, more fuel the vehicle consumes. Take out any luggage or cargo when it is not necessary.

Keep tire pressures correct
Underinflation of the tires can waste fuel due to increased running resistance of the tires. Keep your tires inflated to the correct pressure shown on the label on the driver's door lock pillar.

Highway Driving

When driving at high speeds, pay attention to the following:

- Stopping distance progressively increases with vehicle speed. Apply the brakes far enough ahead of the stopping point to allow for the extra stopping distance.
- On rainy days, hydroplaning can occur. Hydroplaning is the loss of direct contact between the road surface and the vehicle's tires due to a water film forming between them. Steering or braking the vehicle while hydroplaning can be very difficult, and loss of control can occur. Keep speed down when the road surface is wet.
- At high speeds, the vehicle may be affected by side winds. Therefore, reduce speed and be prepared for unexpected buffeting, which can occur at the exits of tunnels, when passing by a cut of a hill, or when being overtaken by large vehicles, etc.

Driving on Hills

EXAMPLE

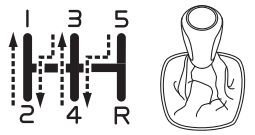

82PH008

- When climbing steep hills, the vehicle may begin to slow down and show a lack of power. If this happens, you should shift to a lower gear so that the engine will again be operating in its normal power range. Shift rapidly to prevent the vehicle from losing momentum.
- When driving down a hill, the engine should be used for braking by shifting into a lower gear.

⚠ WARNING

Try not to hold the brake pedal down too long or too often while going down a steep or long hill. This could cause the brakes to overheat, resulting in reduced braking efficiency. Failure to take this precaution could result in loss of vehicle control.

While moving uphill/gradient from a stand still condition

- Apply the parking brake firmly so that the vehicle does not roll backwards.
- Depress the Clutch pedal and Shift the gearshift lever to 1st Select position.
- Do not slip the clutch.
- When ready to start, press accelerator pedal and slowly release the clutch pedal simultaneously. When the vehicle starts to move, gradually release the parking brake.

NOTICE
When descending down a hill, NEVER turn the ignition key to the "LOCK" position or press the engine switch to change the ignition mode to LOCK (OFF). Emission control system damage may result.

Driving on Slippery Roads

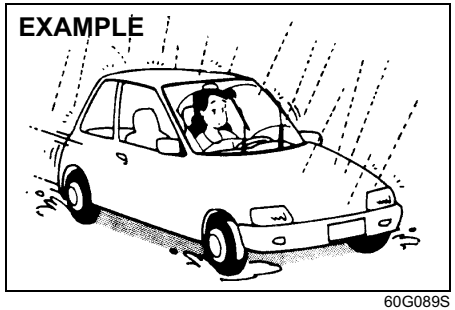

60G089S

Under wet road conditions you should drive at a lower speed than on dry roads due to possible slippage of tires during braking. When driving on icy, snow-covered, or muddy roads, reduce your speed and avoid sudden acceleration, abrupt braking, or sharp steering movements.

Tire Chains

Tire chains should only be used if they are needed to increase traction or are required by law. Make sure that the chains you use are the correct size for your vehicle's tires. Also make sure that there is enough clearance between the fenders and the chains as installed on the tires.

Install the chains on the front tires tightly, according to the chain manufacturer's instructions. Retighten the chains after driving about 1.0 km if necessary. Drive slowly with the chains installed.

NOTICE
• **If you hear the chains hitting against the vehicle body while driving, stop and tighten them.** • **If your vehicle is equipped with full wheel caps, remove the wheel caps before installing the chains or the wheel caps can be damaged by the chain bands.**

If Your Vehicle Gets Stuck

If your vehicle gets stuck in snow, mud, or sand, follow the directions below:

1) Shift the transaxle back and forth between first gear and reverse. This will create a rocking motion which may give you enough momentum to free the vehicle. Press gently on the accelerator to keep wheel spinning to a minimum wheel rpm. Remove your foot from the accelerator while shifting.
   Do not race the engine. Excessive wheel spin will cause the tires to dig deeper, making it more difficult to free the vehicle.
2) If your vehicle remains stuck after a few minutes of rocking, we recommend you to consult your authorised Maruti Suzuki workshop or a roadside assistance service. If a towing service is not available in an emergency, your vehicle may be temporarily towed by a towing cable or chain secured to the towing hook either on the front of the vehicle or on the rear of the vehicle. Refer to "Frame Hooks" in the "OTHER CONTROLS AND EQUIPMENT" section.

⚠ WARNING

Do not allow anyone to stand near the vehicle when you are rocking it, and do not spin the wheels faster than an indicated 40 km/h on the speedometer. Personal injury and/or vehicle damage may result from spinning the wheels too fast.

NOTICE

Do not continue rocking the vehicle for more than a few minutes. Prolonged rocking can cause engine overheating or transaxle damage.

Driving on Wet Roads

NOTICE

- **When driving on wet roads, avoid driving through large amount of standing water on the road. Large amount of water entering the engine compartment may cause damage to the engine and or electrical components.**
- **If stuck in deep water, do not start the engine.**
- **Water is incompressible substance, water inside engine is harmful to the engine.**

⚠ WARNING

In addition to following the driving tips in this section, it is important to observe the following precautions.

- **Make sure your tires are in good condition and always maintain the specified tire pressure. Refer to "Tires" in the "INSPECTION AND MAINTENANCE" section for details.**
- **Do not use tires other than those specified by MARUTI SUZUKI. Never use different sizes or types of tires on the front and rear wheels. For information regarding the specified tires, refer to the Tire Information Label located on the driver's door lock pillar.**
- **Never use oversized tires or special shock absorbers and springs to raise (jack up) your vehicle. This will change the handling characteristics. Oversized tires may also rub against the fender over bumps, causing vehicle damage or tire failure.**

(Continued)

⚠ WARNING

(Continued)

- **After driving through water, test the brakes while driving at a slow speed to see if they have maintained their normal effectiveness. If the brakes are less effective than normal, dry them by repeatedly applying the brakes while driving slowly until the brakes have regained their normal effectiveness.**

EXAMPLE

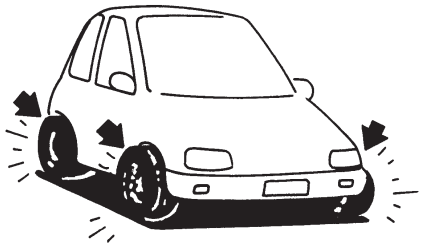

82PHM04001

Do's and Dont's for Safe Driving

Exercise care in handling your vehicle. Be conscious of not only your own safety but also the safety of others on the road, and thus enjoy the best and most comfortable driving experience.

Following are basic rules for safe driving. Read them carefully for good understanding of the content so that you can enjoy safe and pleasant driving in your vehicle.

Starting

1) Adjust the driver's seat for the proper driving posture.
2) Adjust the rear view mirror so as to obtain the best possible rear view.

EXAMPLE

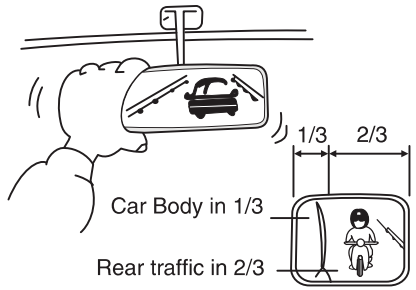

72F-08-001

3) Before moving, look around your vehicle to confirm safety.
4) Don't accelerate suddenly, since it is dangerous and wastes fuel.

General Driving

1) Be sure to stop before a stop light or stop sign. When moving into an intersection without any traffic lights or signs, drive slowly to confirm safety.
2) Always follow other vehicles at a safe distance in order to prevent a rear-end collision, in case the vehicle ahead makes a sudden stop.

EXAMPLE

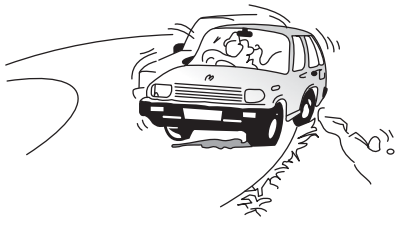

72F-08-008

3) Turn ON the turn signal at least 30 meters before making a turn or changing the lane so as not to be hit.
4) Before entering a corner, decelerate to a safe speed. Don't apply brakes during cornering, or skidding may occur.
5) When overtaking other vehicles, watch out for oncoming vehicles and carefully ensure safety.
6) Don't attempt zigzag driving as it will hinder your control over the vehicle and may cause an accident.
7) Avoid reckless high speed driving and try to drive at a safe speed suitable for the road conditions while maintaining a constant speed.
8) The higher the speed, the narrower the driver's visual range becomes. In such a state, it is difficult to anticipate any hazard and the driver feels fatigued.

EXAMPLE

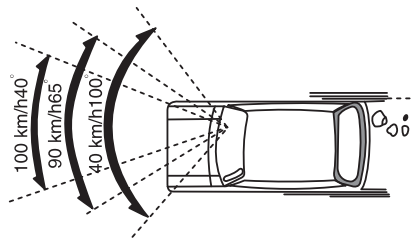

72F-08-015

9) Do not attempt sharp handling during high speed driving. You may lose your control over your vehicle.
10) When overtaking or changing lanes while driving at a high speed, keep ample vehicle-to-vehicle distance.

Braking

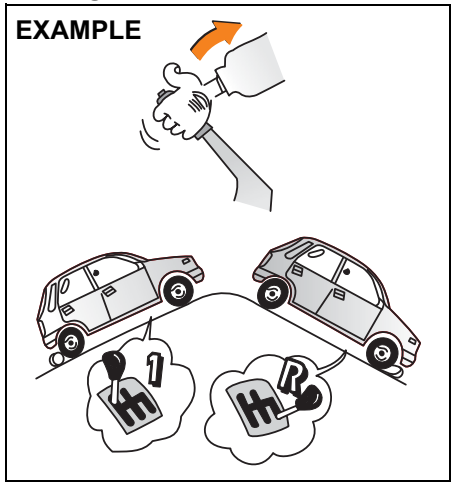

72F-08-011

1) Use the parking brake when parking your vehicle and shift the gear shift lever into the first gear or reverse gear position for the sake of safety.
2) Don't use hand-braking unless unavoidable. It causes the vehicle to skid and a collision may occur. It is especially dangerous when the tyres are worn out as they skid more.

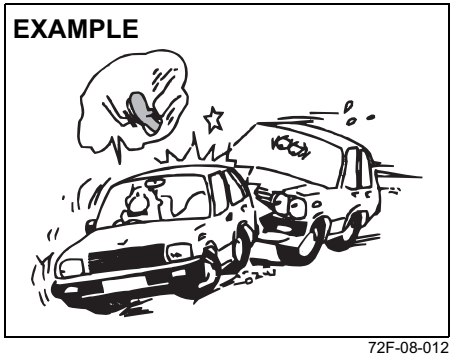

72F-08-012

Use foot brake in three stages
1. Warn the vehicle behind you
2. Gradually apply the brake.
3. Bring the vehicle to a halt.

3) When driving downhill, try not to apply the brake but use the engine brake effectively. Overuse of the foot-brake may result in reduction of brake effectiveness.

Long Distance Driving

1) Be sure to perform safety checks before starting a trip.
2) Take rest at regular intervals to prevent accidents which may occur due to feeling sleepy or tired.

Night Time Driving

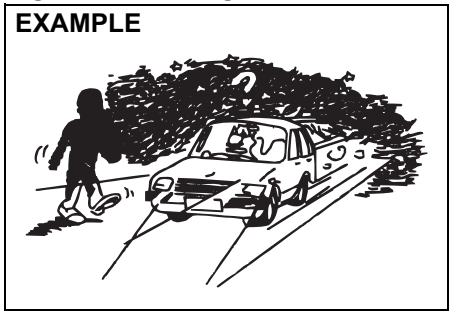

72F-08-020

1) Drive at lower speeds during the night than in the daytime, as the visual range is restricted at night.
2) Avoid overtaking other vehicles at night. Darkness bothers your sense of speed and hinders your judgment of vehicle-to-vehicle distance.

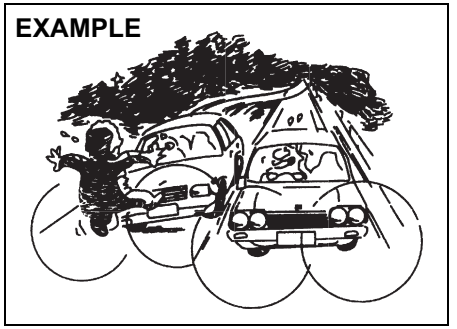

72F-08-021

3) Don't use headlights on high beam unless its use is inevitable. It may cause visual impairment to the driver of the oncoming vehicle or the vehicle ahead of you, which may cause an accident.
4) Always keep the window glasses clean. Don't operate the windshield wiper when the windshield glass is dry else the wiper blade and glass may get damaged.

Margin for Safety

It is important to allow yourself a margin for safety during driving so that you can cope with erroneous or unexpected driving of other drivers. For that, observe the following.

- Drive at a safe speed.
- Maintain a sufficient distance between your vehicle and the vehicle ahead.
- Don't force yourself to overtake other vehicles.
- Don't accelerate suddenly, steer sharply or stop suddenly.
- Keep ample gaps between driving schedules.
- Observe traffic rules and regulations.

Conclusion

A perfect driver does not exist. The endeavour of every motorist should be to strive for perfection. Safety consciousness not only ensures your safety and the safety of other road users, it also helps reduce the wear and tear on your vehicle, lengthens its life, gives better fuel efficiency and ensures a comfortable driving experience.
Follow the do's and dont's listed, and driving will never be the same again.

OTHER CONTROLS AND EQUIPMENT

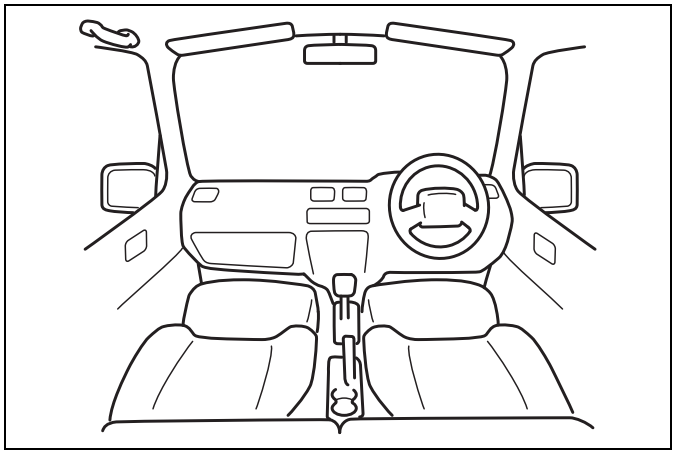

68PM5002

Fuel Filler Cap 5-1
Engine Hood 5-2
Sun Visor 5-4
Interior Light 5-5
Accessory Socket 5-8
AUX/USB Socket (if equipped)..... 5-8
Assist Grips (if equipped) 5-9
Glove Box 5-9
Overhead Console (if equipped) 5-10
Instrument Panel Upper Box (Cool Box) 5-11
Cup Holder and Storage Area 5-12
Footrest 5-15
Floor Mats (if equipped) 5-15
Underseat Tray (if equipped) 5-16
Shopping hook (if equipped) 5-16
Luggage Compartment Cover (if equipped) 5-17
Luggage Compartment Board 5-18
Frame Hooks 5-18
Air Conditioning System 5-20
Manual Heating and Air Conditioning System 5-22
Automatic Heating and Air Conditioning System
(Climate Control) 5-26
Radio Antenna 5-31
Audio System (if equipped) 5-32

Fuel Filler Cap

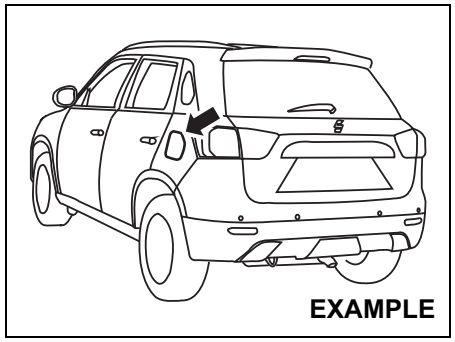

76MH0A064

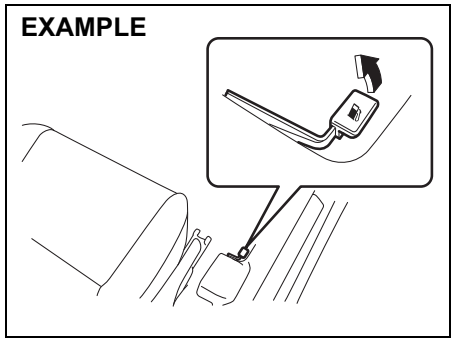

74LHT0511

The fuel filler cap is located on the left rear side of the vehicle. The fuel filler door can be unlocked by pulling up the opener lever located on the outboard side of the driver's seat and locked by simply closing the door.

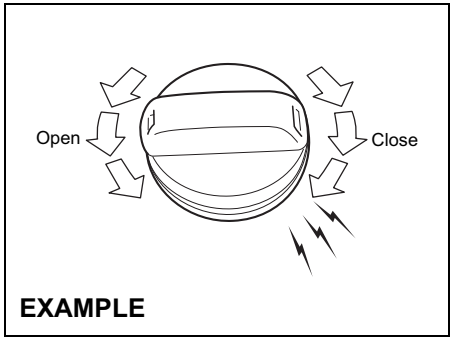

68KN048

To remove the fuel filler cap:
1) Open the fuel filler door.
2) Remove the cap by turning it counter-clockwise.

⚠ CAUTION

Remove the fuel filler cap slowly. The fuel may be under pressure and may spray out, causing injury.

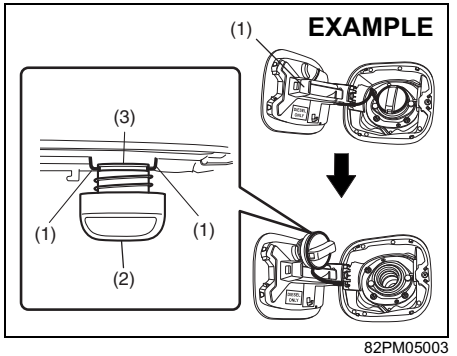

82PM05003

NOTE:
The cap holder (1) hold the fuel filler cap (2) by hooking the cap to the groove (3) when refueling.

To reinstall the fuel filler cap:
1) Turn the cap clockwise until you hear several clicks.
2) Close the fuel filler door.

⚠ WARNING

Fuel is extremely flammable. Do not smoke when refueling, and make sure there are no open flames or sparks in the area.

⚠ WARNING

If you need to replace the fuel cap, use a MARUTI genuine cap. Use of an improper cap can result in a malfunction of the fuel system or emission control system. It may also result in fuel leakage in the event of an accident.

Engine Hood

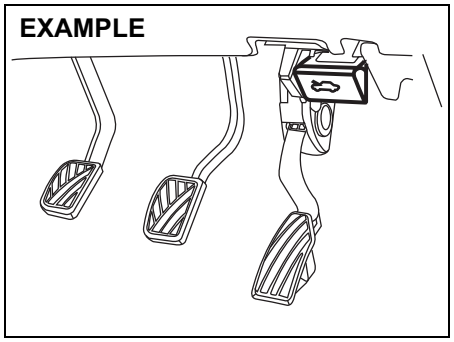

82PH05038

To open the engine hood:

1) Pull the hood release handle located on the outboard side of the driver's side. This will disengage the engine hood lock halfway.

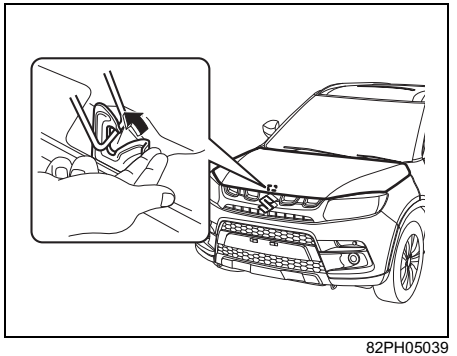

82PH05039

2) Push the under-hood release lever sideways with your finger, as shown in the illustration. While pushing the lever, lift up the engine hood.

⚠ CAUTION

The release lever can be hot enough to burn your finger right after driving. Touch the lever after it becomes cool enough.

NOTICE

Make sure that the wiper arms are not raised before you lift up the engine hood to avoid damaging the wiper arms and the engine hood.

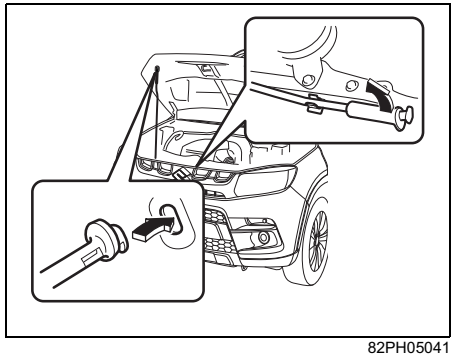

82PH05041

3) While holding the hood, pull the prop rod out from the holding clip, then insert the end of the rod into the designated hole in the hood.

⚠ CAUTION

- **The prop rod can be hot enough to burn your finger right after driving. Touch the rod after it becomes cool enough.**
- **Insert the end of the rod into the hole securely. If the rod drops off, your body may be caught in the hood.**
- **The rod may drop off when the hood is hit by a wind. Be careful on windy days.**

To close the engine hood:

1) Lift the hood up slightly and remove the prop rod from the hole. Put the prop rod back to the holding clip.

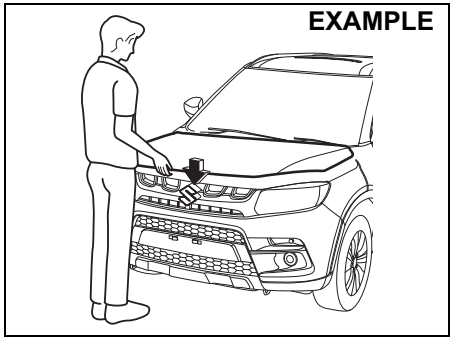

82PH05040

2) Lower the hood to about 20 cm above the hood latch, then let it drop down. Make sure the hood is securely latched after closing.

⚠ WARNING

Make sure the hood is fully closed and latched before driving. If it is not, it can fly up unexpectedly during driving, obstructing your view and resulting in an accident.

⚠ CAUTION

To avoid injury, be sure no part of the occupant's body such as hands or head is in the path of the hood when closing it.

NOTICE

Pressing the hood from above may damage the hood.

Sun Visor

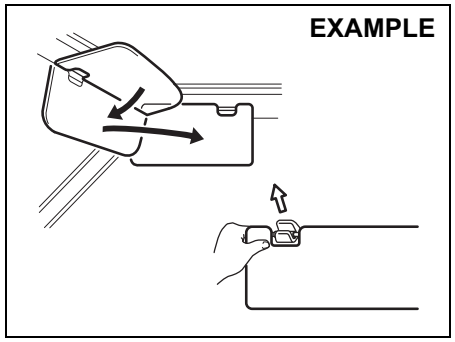

77PH004

The sun visors can be pulled down to block glare coming through the windshield, or they can be unhooked and turned to the side to block glare coming through the side window.

NOTICE
When unhooking and hooking a sun visor, be sure to handle it by the hard plastic parts or the sun visor can be damaged.

Card holder (if equipped)

Type A

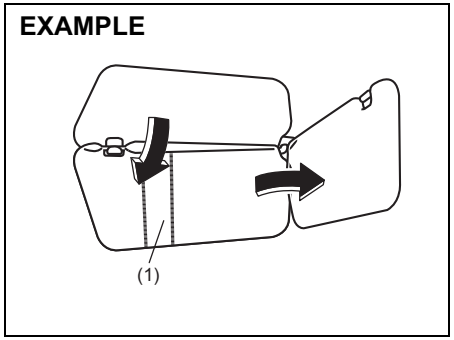

67LH064

Type B

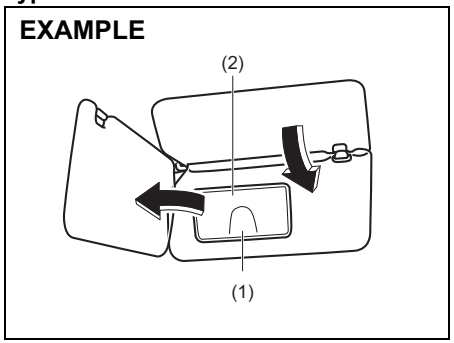

82PH012

(1) Card holder
(2) Mirror cover

You can put a card in the card holder (1) on the back of the sun visor.

NOTICE
When you park your vehicle outdoors in direct sunlight or in hot weather, do not leave plastic cards in the holder. The heat may distort them.

Vanity mirror (if equipped)

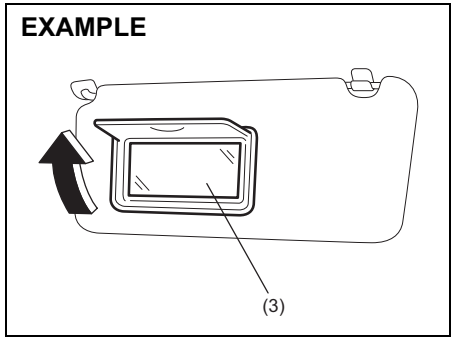

80JS119

(3) Vanity mirror

To use the vanity mirror (3) on the back of the sun visor, pull up the mirror cover (1).

⚠ WARNING

- **Do not use the mirror while driving your vehicle or could lose control of the vehicle.**
- **When using the vanity mirror, do not move too close to a front air bag location or lean against it. If the front air bag is accidentally inflated, it could hit you hard.**

Interior Light

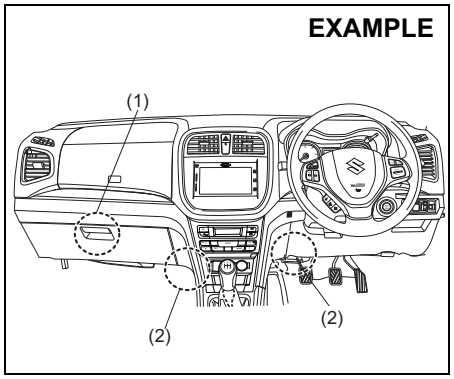

82PH05002

(1) Glove box light (if equipped)
(2) Footwell lights (if equipped)

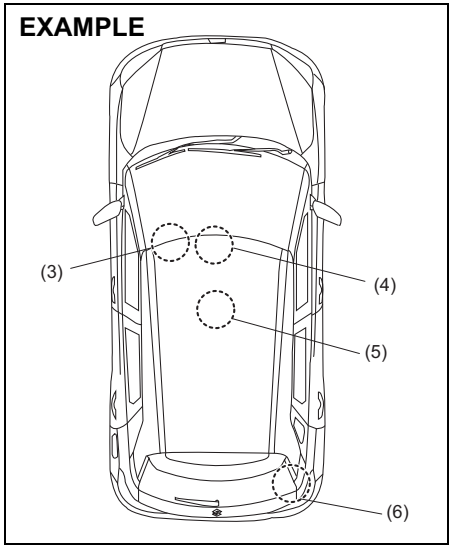

82PH05003

(3) Vanity mirror light (if equipped)
(4) Front (if equipped)
(5) Center
(6) Luggage compartment (if equipped)

Glove Box Light (if equipped) (1)
Refer to “Glove Box” in this section.

Footwell Lights (if equipped) (2)
The footwell lights are provided in the leg space in front of each front seat. The light comes on when any door (including the tailgate) is opened. After closing all doors, the light will remain on for about 15 seconds and then fade out. If you insert the key, or press the engine switch to change the ignition mode to ACC or ON during this time, the light will start to fade out immediately. After removing the key from the ignition switch, the light will turn on for about 15 seconds and then fade out.

NOTE:
You can change the footwell lights operation via the information display. Refer to “Information Display” in the “BEFORE DRIVING” section.

Vanity Mirror Light (if equipped) (3)

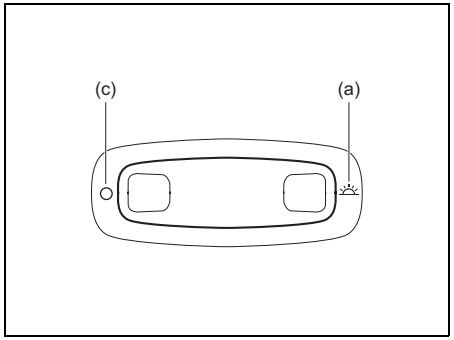

82PH014

Front (if equipped) (4)

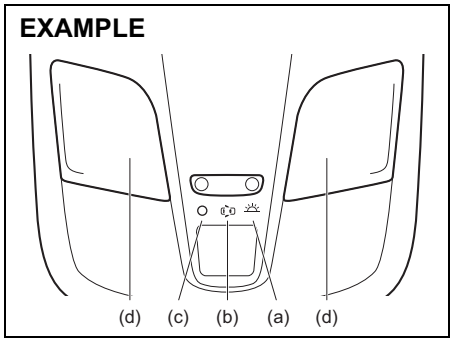

64MS119

Center (5)

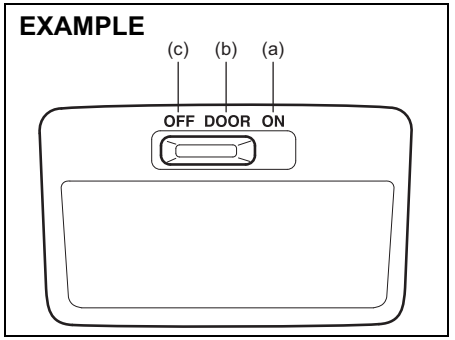

61MM0A107

These light switches have three or four positions which function as described below:

ON (a)
- The light comes on and stays on regardless of whether the door is open or closed.
- To save the battery, the light will be automatically turned off when a period of 15 minutes has elapsed after the light is on.

DOOR (b)
- The light comes on when the door is opened. After closing all doors, the light will remain on for about 15 seconds and then fade out. If you insert the key, or press the engine switch to change the ignition mode to ACC or ON during this time, the light will start to fade out imme-

diately. After removing the key from the ignition switch, the light will turn on for about 15 seconds and then fade out.
- Regardless of whether the door is open or closed, the light comes on 15 seconds and then fade out when the ignition mode is changed to LOCK (OFF) or the ignition switch is turned to the “LOCK” position.

OFF (c)
The light remains off even when the door is opened.

SPOT LIGHT (d)
When the light switch is in the DOOR or OFF position, push the switch to turn on the light and push it again to turn off the light.

Luggage Compartment (if equipped) (6)

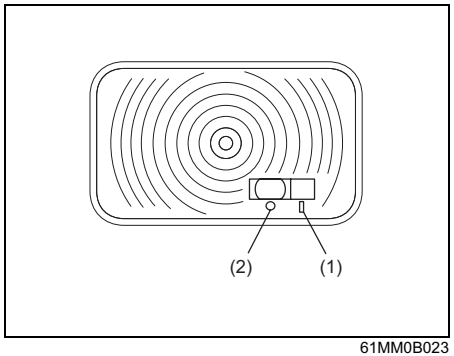

61MM0B023

When you open the tailgate with the luggage compartment light switch in the ON position (1), the light comes on and remains on as long as you keep the tailgate open.
When the luggage compartment light switch is in the OFF position (2), the light remains off regardless of whether the tailgate is open or close.

NOTICE
Do not leave the tailgate open with the luggage compartment light switch in the ON position for a long time, or the battery will discharge.

EXAMPLE

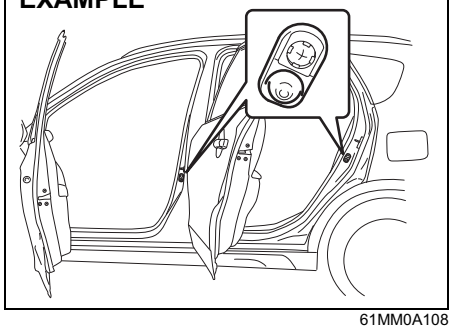
61MM0A108

NOTE:
The number of doors involved in the lighting operation of the interior light depends on the vehicle specification. If there is a switch (rubber projection) at the door opening as shown, the door is involved in the lighting operation. The tailgate is also involved in this operation even without the rubber projection.

Accessory Socket

Center console

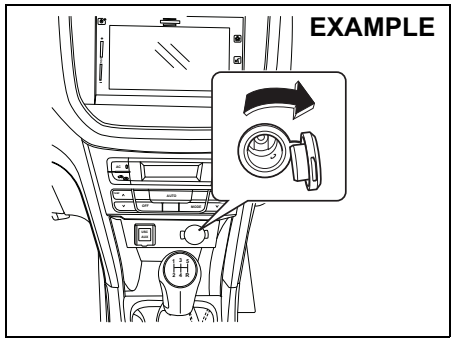

82PH05004

Luggage compartment (if equipped)

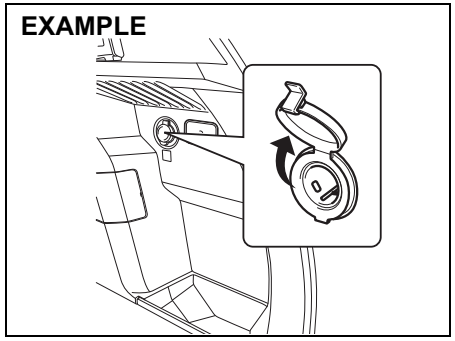

82PH05005

The accessory socket will work when the ignition switch is in the “ACC” or “ON” position, or the ignition mode is ACC or ON.
Each socket can be used to provide 12 volt/120 watt/10 ampere power for electrical accessories when used alone. Make sure that the cap remains on the socket when the socket is not in use.

NOTICE

- **To prevent the fuse from being blown, when using sockets at the same time, do not exceed the total combined power capacity of 12 volt/120 watt/10 ampere.**
- **Use of inappropriate electrical accessories can cause damage to your vehicle’s electrical system. Make sure that any electrical accessories you use are designed to plug into this type of socket.**

AUX/USB Socket (if equipped)

Type A

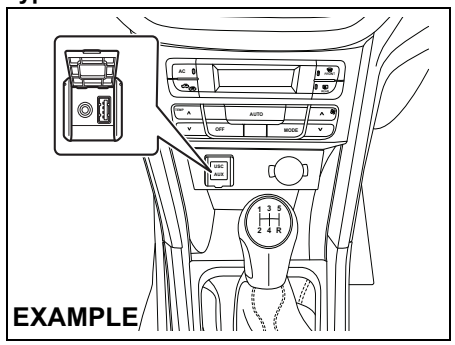

82PH05006

Type B

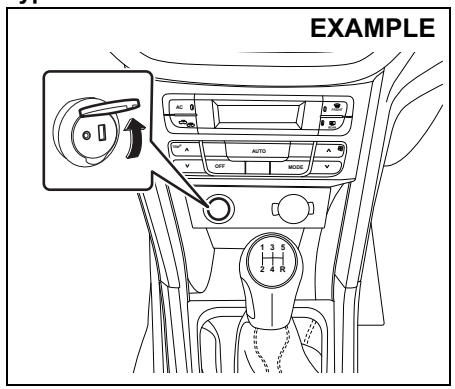

82PM05004

Connect your portable digital music player, etc. to this socket to enjoy music through the vehicle's audio system using it as a source. Refer to "Audio System" in this section.

NOTICE

Always close the lid when not in use, since entry of foreign material, dust, water, conductive liquids may damage the audio system or USB device.

Assist Grips (if equipped)

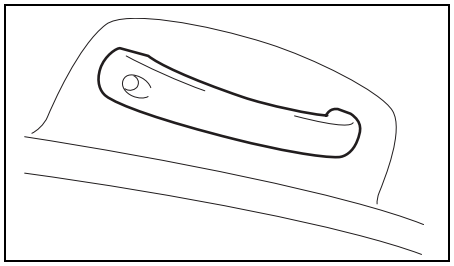

76MH0A072

Assist grips are provided for convenience.

NOTICE

To avoid damaging the assist grip and the molded headlining, do not hang down the assist grip.

Coat Hooks (if equipped)

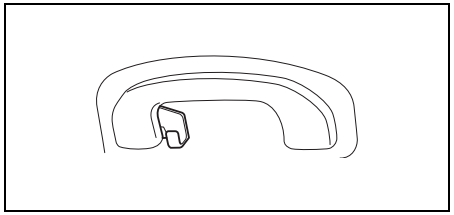

61MM0B025

You can hang clothing on the coat hooks. These hooks are not designed for large or heavy items.

Glove Box

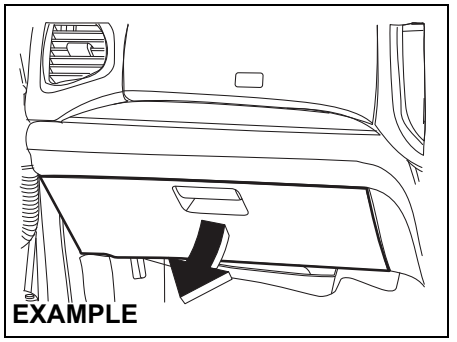

82PH05007

To open the glove box, pull the latch lever. To close it, push the lid until it latches securely.

⚠ WARNING

Never drive with the glove box lid open. It could cause injury if an accident occurs.

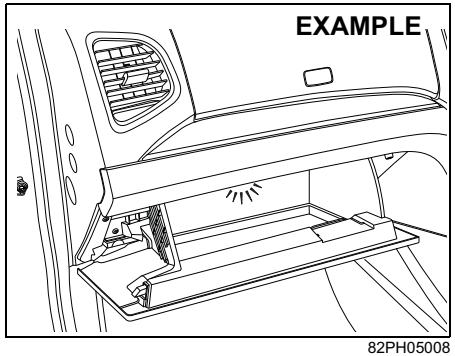

82PH05008

The glove box light (if equipped) stays on while the lid is open.

Overhead Console (if equipped)

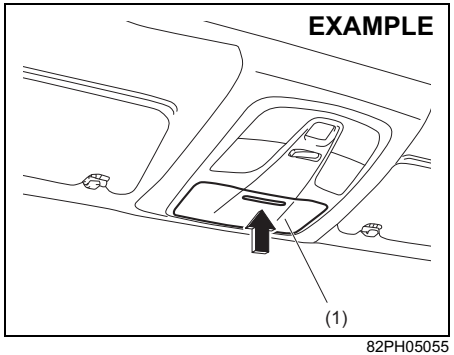

82PH05055

Use this stowage to keep small articles. You can open the lid (1) by pressing the depressed portion on it.

⚠ WARNING

- **Do not drive with the overhead console lid open, or the articles stowed inside could fall down during braking, acceleration or in the event of a collision. Always close the lid after putting something into or taking something out of the console.**
- **If you park your vehicle outdoors in direct sunlight or in hot weather, the overhead console can get very hot since it is close to the roof. So, when parking in such conditions:**
  - **– Do not leave eyeglasses or other plastic items in the overhead console. The heat may distort plastic lenses or frames.**
  - **– Do not place flammable items, such as a lighter, in the overhead console. The heat may cause a fire.**

NOTICE

- **Do not apply undue force to the lid when closing it. Doing so could break the lid and articles inside.**
- **Place glasses in a case when stowing them in the overhead console, or the lenses may be damaged.**

Instrument Panel Upper Box (if equipped)

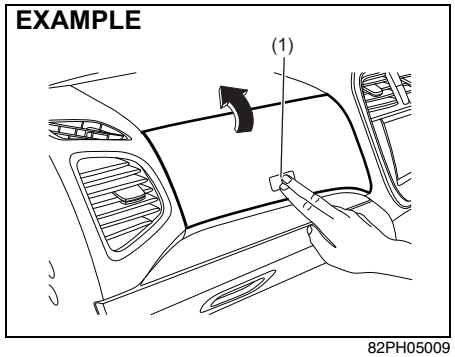

82PH05009

To open the instrument panel upper box, push the button (1) at the center with two fingers.
Keep the lid closed except when you put or remove an object.

⚠ WARNING

Never drive with the instrument panel upper box lid open. It could cause personal injury in an accident.

Cool Box (if equipped)

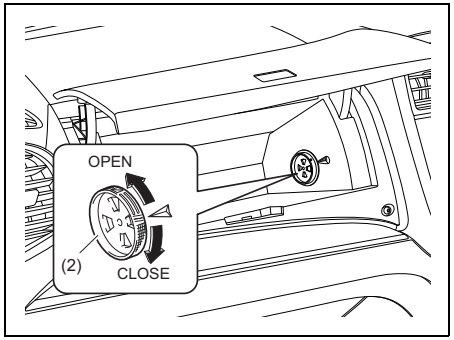

82PH05010

When the air conditioning system is operated with the ventilation position, you can keep items such as drinks cool in the cool box. Turn the shut dial (2) to open or close the air outlet.

- To cool the box, turn the dial counterclockwise when the air conditioning system is on.
- To stop cooling, turn the dial clockwise.

Keep the shut dial (2) in closed position if the cool feature is not in use.

NOTICE

- **The cooling effectiveness of the cool box will be reduced if items placed in the cool box block the air outlet.**
- **When cooling function is being used, condensed moisture can damage any papers, documents, electronic equipment etc., kept in the cool box.**
- **Do not leave a carbonated drink can if you park your vehicle outdoors in direct sunlight or in hot weather, where inside of the cool box can get very hot. The carbonated drink can may explode.**
- **Do not place an opened-can which contains drink. The cool box may be damaged if it is spilled out.**
- **Do not put perishable food items in the cool box as it may not maintain necessary consistent temperature to keep the food fresh.**
- **Do not put items with strong odour in the cool box. The odour may spread inside the passenger cabin.**

NOTE:
The temperature of the air that comes into the box is almost the same as the ventilation air flow temperature. The temperature in the box cannot be cooler than the temperature of the air that comes into the box.

Cup Holder and Storage Area

EXAMPLE

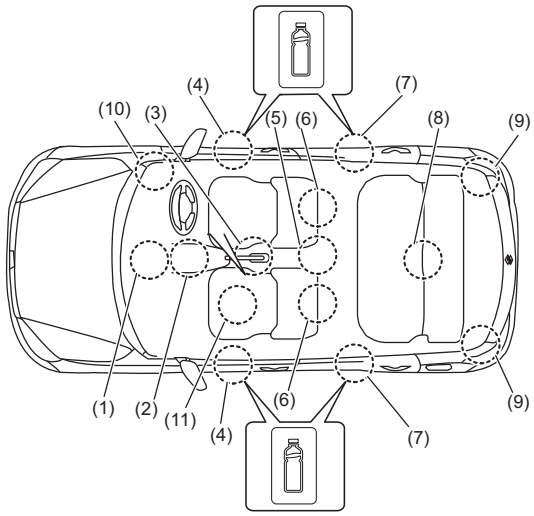

82PH05011

(1) Instrument panel pocket
(2) Front cup holders
(3) Front armrest with console box (if equipped)
(4) Front door pocket
(5) Rear Console Pocket (if equipped)
(6) Front seat back pocket
(7) Rear door pocket
(8) Rear armrest with cup holder (if equipped)
(9) Luggage compartment pocket
(10) Driver side Pocket
(11) Underseat tray (if equipped)

Instrument Panel Pocket (1) / Driver Side Pocket (10)

⚠ WARNING

Do not place any objects which may fall out from the pocket when the vehicle is moving.
Failure to take the precaution may result in an object interfering with the pedals and causing a loss of vehicle control or an accident.

Front Cup Holders (2)

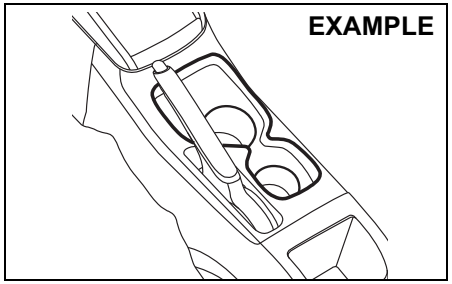

82PH05052

⚠ WARNING

Failure to take the precautions listed below could cause personal injury or vehicle damage.

- **Be careful when you are using the cup holders to hold a cup containing hot liquid. Spilling out hot liquid can cause burn injury.**
- **Do not use the cup holders to hold sharp-edged, hard, or breakable objects. Objects in the cup holders may be thrown about during a sudden stop or impact, and could cause personal injury.**
- **Be careful not to spill liquid or insert any foreign materials into the moving part of the gearshift lever, or any electrical components. Liquid or foreign materials may damage these parts.**

Front Armrest with Console Box (if equipped) (3)

NOTICE

To avoid damage to the armrest, do not lean on it or allow a child to sit on it.

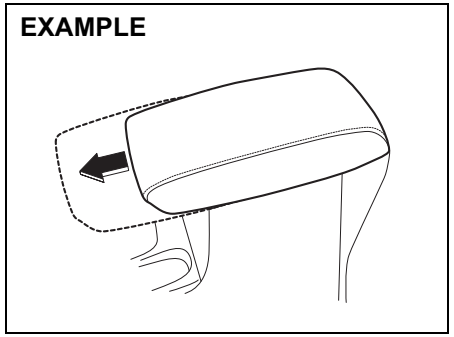

82PH05042

The armrest can be slide forward.

Console box

Use this stowage for keeping small items. Open the compartment by raising the top lid while keeping the lever (1) up.

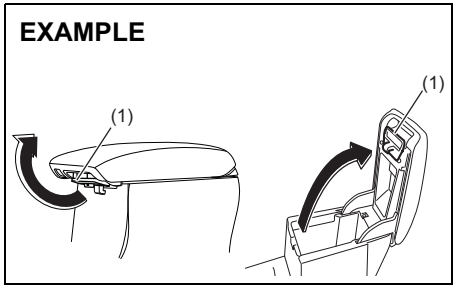

82PH05043

Always close the lid after you put something into or take something out of the box.

Front Door Pocket (4) / Rear Door Pocket (7)

This pocket is provided for holding light and small items.

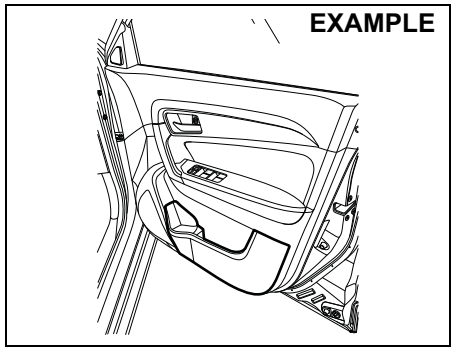

82PH05056

Bottle holder

You should hold a bottle with a cap in the holder.

Rear Console Pocket (5)

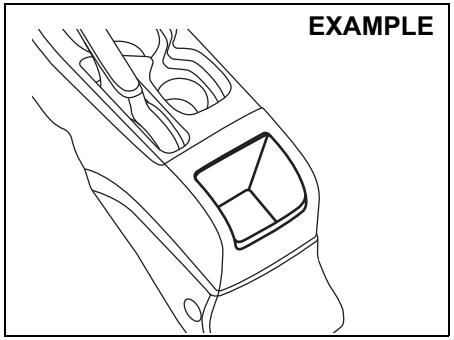

82PH05051

Open the top to use the cup holder.

Front Seat Back Pocket (6)

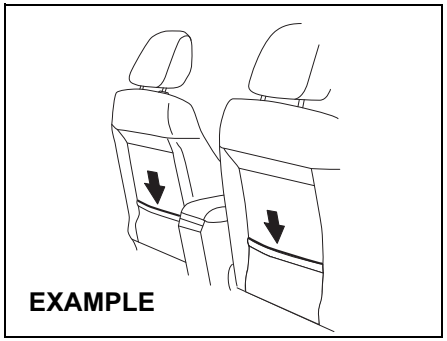

82PH05045

This pocket is provided for holding light and soft things such as gloves, newspapers or magazines.

⚠ CAUTION

Do not put hard or breakable objects in the pocket. If an accident occurs, objects such as bottles, cans, etc. can injure the occupants in the rear seat.

Rear Armrest with Cup Holders (if equipped) (8)

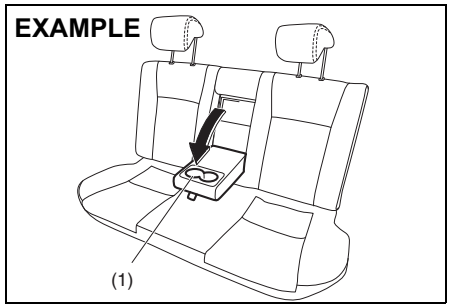

82PH05046

(1) Cup holders

The rear armrest is stowed in the center of the seatback. Tilt it down forward to use.

! WARNING

- **If the seat belt is obstructed by any part of the armrest when fastened, it cannot provide the intended protection. After fastening the seat belt, always check that the armrest is not interfering with the belt.**
- **In an accident or sudden stop, the rear seat armrest could fall forward. If there is a child in a rear-facing child restraint in the rear center seating position, the falling armrest could injure the child. Do not install a rear-facing child restraint in the rear center seating position.**

Luggage Compartment Pocket (9)

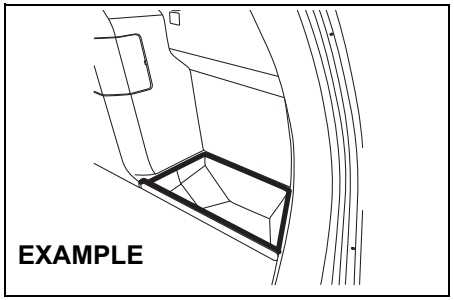

82PH05047

Underseat Tray (if equipped) (11)

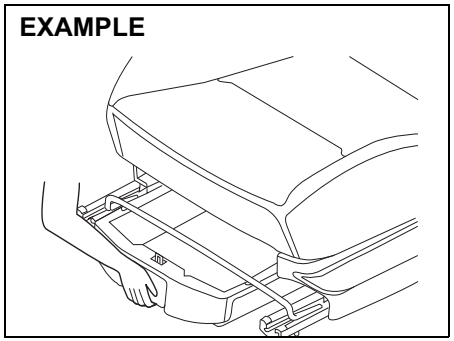

82PH05033

The tray is located under the front passengers seat. Pull the handle forward to draw out the tray. Be sure to push back in the tray before driving.

NOTICE

To avoid breaking of underseat tray do not hold the items weighing more than 1 kg.

⚠ CAUTION

Ensure proper locking of underseat tray before driving. Incorrect locking will lead to rattling noise while driving.

Footrest

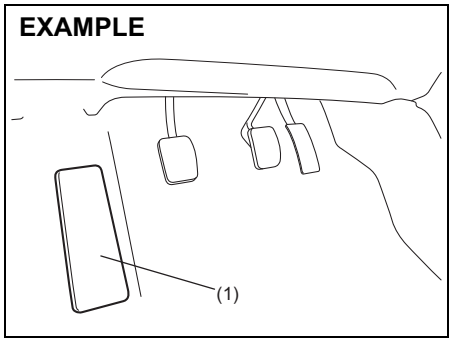

58MST0509

Use the footrest (1) as a support for your left foot.

Floor Mats (if equipped)

EXAMPLE

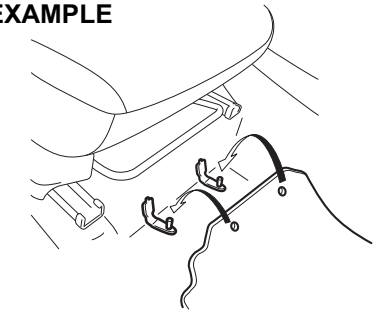

64MS085

To prevent the driver's side floor mat from sliding forward and possibly interfering with the operation of the pedals, MARUTI genuine floor mats are recommended.
Whenever you put the driver's side floor mat back in the vehicle after it has been removed, be sure to hook the floor mat grommet(s) to the fastener(s) and position the floor mat properly in the footwell.

When you replace the floor mats in your vehicle with a different type such as all-weather floor mats, we highly recommend using MARUTI genuine floor mats for proper fitting.

⚠ WARNING

Failure to take the following precautions may result in the driver's side floor mat interfering with the pedals and causing a loss of vehicle control or an accident.
- **Make sure that the floor mat grommet(s) is(are) hooked to the fastener(s).**
- **Never place additional floor mats on top of the existing floor mat.**

Shopping Hook (if equipped)

Luggage Compartment (if equipped)

EXAMPLE

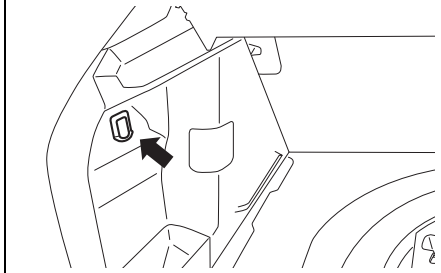

64MS086

You can hang the shopping bag or other suitable objects on the hook.
This hook is not designed for large or heavy items.

NOTICE

To avoid breaking the hook, do not hang items heavier than following weight.
Shopping hook: 1 kg

Behind Driver Seat (if equipped)

You can hang the shopping bag or other suitable objects on the hook. This hook is not designed for large or heavy items.

NOTICE

To avoid breaking the hook, do not hang items heavier than 3 kg.

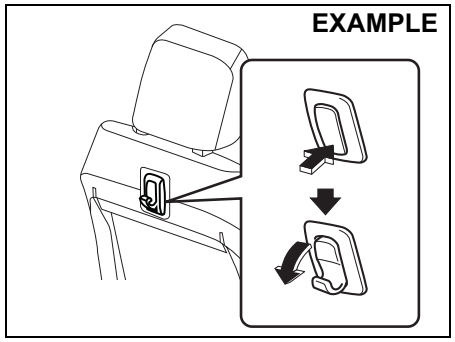

82PH05049

NOTICE

Make sure the weight is not hung on the front seat back hook during the reclining of driver seat.

Luggage Compartment Cover (if equipped)

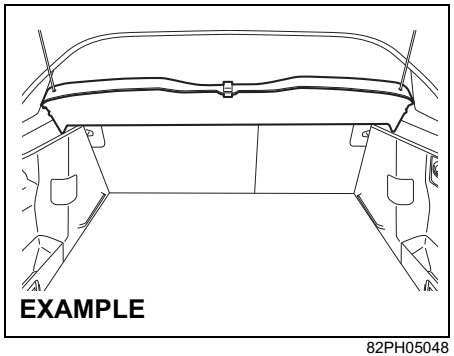

82PH05048

Luggage or other cargo placed in the luggage compartment is hidden from view by a luggage compartment cover.

⚠ WARNING

Do not carry items on top of the luggage compartment cover, even if they are small and light. Objects on top of the cover could be thrown about in an accident, causing injury, or could obstruct the driver's rear view.

NOTICE

To avoid damaging the luggage compartment cover:

- **Do not push down on it or lean on it.**
- **Handle it carefully when installing or removing.**

Luggage Compartment Board

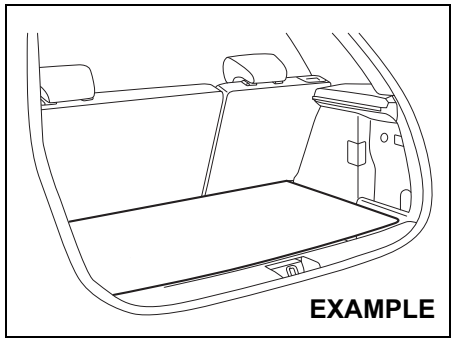

64MS088

Your vehicle is equipped with the luggage compartment board in the luggage compartment.

⚠ WARNING

Objects that extend higher than the luggage compartment cover (if equipped) can obstruct the driver's rear view, which can cause an accident. These objects can also become damaged or can damage the tailgate.
Do not carry items that extend higher than the luggage compartment cover.

⚠ CAUTION

If you are not careful when handling the luggage board, you could be injured.
Handle the luggage board carefully when removing or installing it.

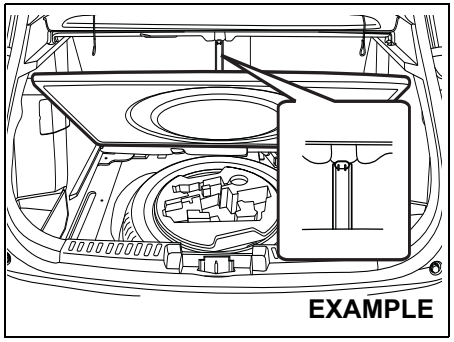

61MM0B036

If the vehicle is equipped with the luggage compartment cover, then the luggage compartment board can be held open as shown in the illustration.

NOTICE

Do not apply undue force to the board which is held open, and do not hold open the board while driving. Doing so could break the board or the interior.

Frame Hooks

Front

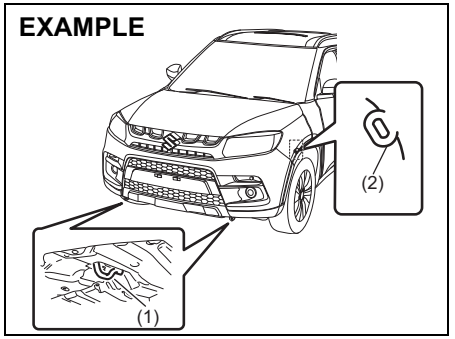

82PH05050

The frame hooks (1) is provided on the front of the vehicle for use in emergency situations and train/trailer shipping purposes only. The hooks (2) are provided for sea shipping purpose only.

To tow your vehicle on the road or highway, follow the instruction of "Towing" in "EMERGENCY SERVICE" section.

⚠ WARNING

Do not use the frame hooks to tow another vehicle or to have your vehicle towed on the road or highway.
The hook (1) is designed for use in emergency situations only, such as if your vehicle or another vehicle gets stuck in deep mud or snow.

NOTICE

When you use the frame hook (1), avoid the driving that gives significant physical shock on hook. Such operation can damage the hook, or the vehicle body.
Do not accelerate suddenly.

Rear

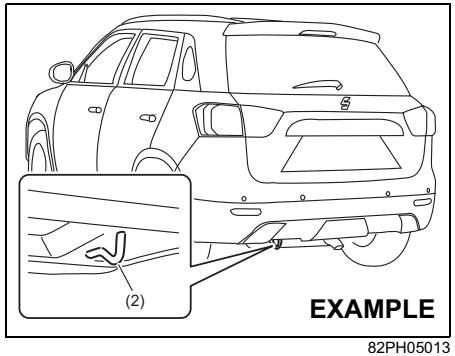

82PH05013

The frame hook (2) is provided on the rear of the vehicle for use in emergency situations and train/sea shipping purposes only.

To tow your vehicle on the road or highway, follow the instruction of “Towing” in “EMERGENCY SERVICE” section.

⚠ WARNING

Do not use the frame hooks to tow another vehicle or to have your vehicle towed on the road or highway. The hook (2) is designed for use in emergency situations only, such as if your vehicle or another vehicle gets stuck in deep mud or snow.

NOTICE

When you use the frame hook (2), avoid the driving that gives significant physical shock on hook. Such operation can damage the hook, the vehicle body or the drive system.
- **Do not accelerate suddenly.**
- **Do not tow the vehicle heavier than your vehicle.**

Air Conditioning System

There are two types of heating and air conditioning systems as follows:

- Manual Heating and Air Conditioning System
- Automatic Heating and Air Conditioning System (Climate Control) (if equipped)

Air Outlet

EXAMPLE

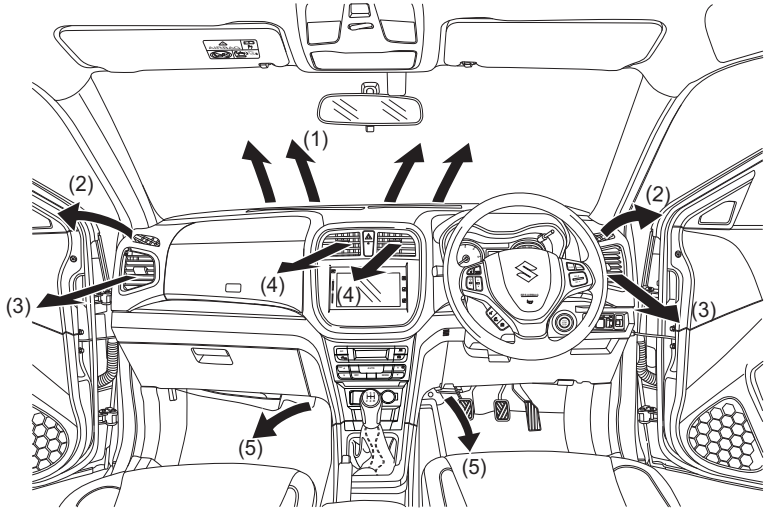

82PH05014

1. Windshield defroster outlet
2. Side defroster outlet
3. Side outlet
4. Center outlet
5. Floor outlet

Side outlet

EXAMPLE

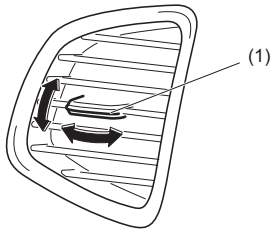

82PH049

Move the knob (1) vertically or horizontally, to adjust the direction of airflow as desired.

Center outlet

EXAMPLE

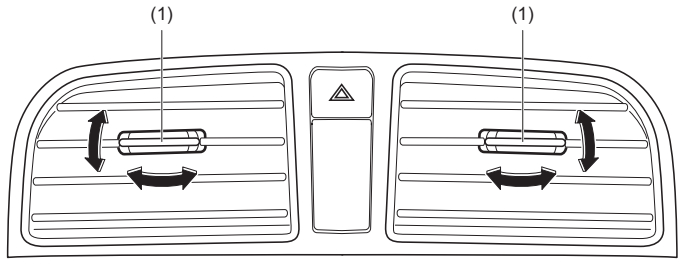

82PH050

Move the knob (1) vertically or horizontally to adjust the direction of airflow as desired.

Manual Heating and Air Conditioning System

Description of Controls

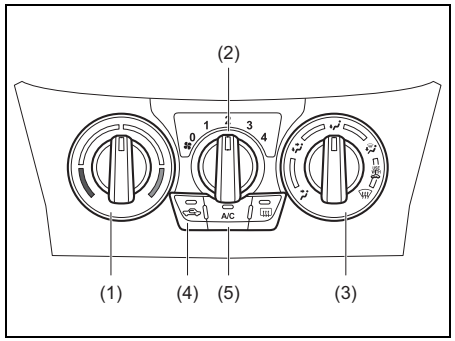

82PH051

Temperature selector (1)
This is used to select the temperature by turning the selector.

Blower speed selector (2)
This is used to turn on the blower and to select blower speed by turning the selector.

Air flow selector (3)

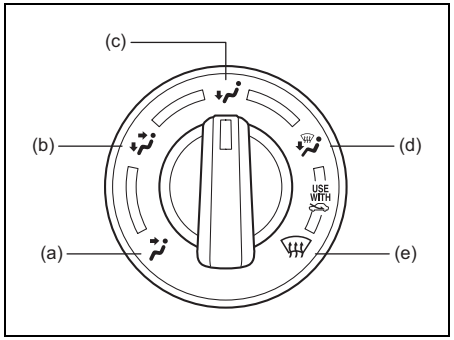

61MM0A019

This is used to select one of the functions described below.

Ventilation (a)

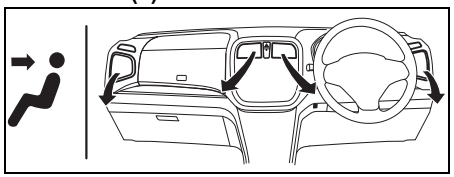

82PH05015

Temperature-controlled air comes out of the center and side air outlets.

Bi-level (b)

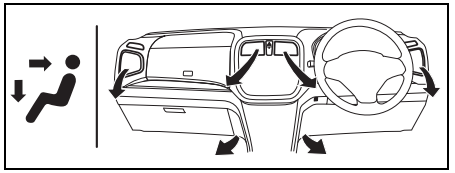

82PH05016

Temperature-controlled air comes out of the floor outlets and cooler air comes out of the center and side outlets. When the temperature selector (1) is in the fully COLD position or fully HOT position, however, the air from the floor outlets and the air from the center and side outlets will be the same temperature.

Heat (c)

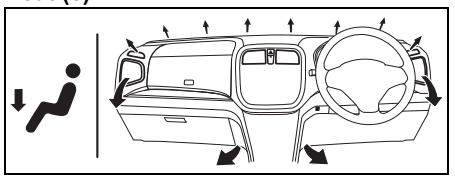

82PH05017

Temperature-controlled air comes out of the floor outlets and the side outlets, also comes out of the windshield defroster outlets and also comes slightly out of the side defroster outlets.

Heat & defrost (d)

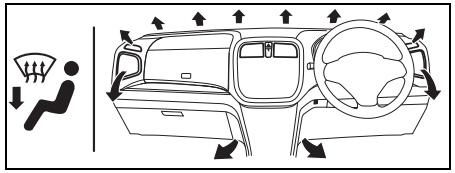

82PH05018

Temperature-controlled air comes out of the floor outlets, the windshield defroster outlets, the side defroster outlets and the side outlets.

Defrost (e)

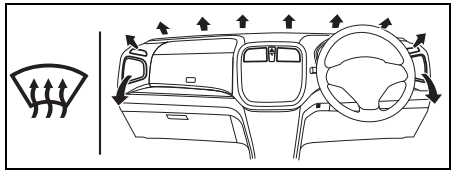

82PH05019

Temperature-controlled air comes out of the windshield defroster outlets, the side defroster outlets and the side outlets.

Air intake selector (4)

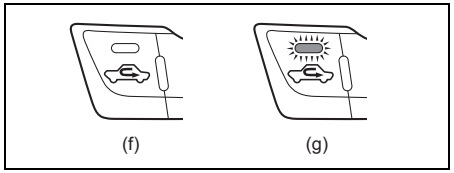

82PH015

This selector is used to select the following modes.

Fresh Air (f)
When this mode is selected, the indicator light will go off and outside air is used.

Recirculated Air (g)
When this mode is selected, the indicator light will come on, outside air is shut out and inside air is recirculated. This mode is suitable when driving through dusty or polluted air such as in a tunnel, or when attempting to quickly cool down the interior.

The fresh air position (f) and recirculated air position (g) are switched alternately each time the air intake selector is pushed.

NOTE:
If you select the recirculated air position (g) for an extended period of time, the air in the vehicle can become contaminated. Therefore, you should occasionally select the fresh air position (f).

Air conditioning switch (5)
To turn on the air conditioning system, set the blower speed selector to the desired blower speed position and push in the air conditioning switch (5). With the air conditioning switch operation, a indicator light will come on when the air conditioning system is on. To turn off the air conditioning system, push the air conditioning switch again.

During operation of the air conditioner, you may notice slight changes in engine speed. These changes are normal, the system is designed so that the compressor turns on or off to maintain the desired temperature.

Less operation of the compressor results in better fuel economy.

System Operating Instructions

Natural ventilation
Select the ventilation position (a) and fresh air position (f), the temperature selector to the desired temperature position, and turn off the blower. Fresh air will flow through the vehicle during driving.

Forced ventilation
The control settings are the same as for natural ventilation except turning the blower speed selector to turn on the blower.

Normal heating (using outside air)
Select the heat position (c) and fresh air position (f), the temperature selector to the desired temperature position and the blower speed selector to the desired blower speed position. Setting the blower speed selector to a higher blower speed position increases heating efficiency.

Quick heating (using recirculated air)
The control settings are the same as for normal heating except selecting the recirculated air position (g). If you use this heating method for an extended period of time, the air in the vehicle can become contaminated and the windows can become misty. Therefore, use this method only for quick heating and change to the normal heating method as soon as possible.

Head cooled/Feet warmed heating
Select the bi-level position (b) and fresh air position (f), the temperature selector to the desired temperature position, and the blower speed selector to the desired blower speed position. Unless the temperature selector is in the fully COLD position or fully HOT position, the air that comes out of the center and side outlets will be cooler than the air that comes out of the floor outlets.

Normal cooling
Set the air flow selector to the ventilation position (a), the temperature selector to the desired temperature position and the blower speed selector to the desired blower speed position, and push in the air conditioning switch (5) to turn on the air conditioning system. Setting the blower speed selector to a higher blower speed position increases cooling efficiency.

You can switch the air intake selector to either the fresh air position (f) or recirculated air position (g) as you desire. Choosing the recirculated air position (g) increases cooling efficiency.

Quick cooling (using recirculated air)
The control settings are the same as for normal cooling except selecting the recirculated air position (g) and the highest blower speed.

NOTE:
- *If you select the recirculated air position (g) for an extended period of time, the air in the vehicle can become contaminated. Therefore, you should occasionally select the fresh air position (f).*
- *If your vehicle has been left in the sun with the windows closed, it will cool faster if you open the windows briefly while you operate the air conditioner with the air intake selector at the fresh air position (f) and the blower at high speed.*

Dehumidifying
Set the air flow selector to a desired air flow selector position, the temperature selector to the desired temperature position and the blower speed selector to the desired blower speed position. Also select the fresh air position (f) and push in the air conditioning switch (5) to turn on the air conditioning system.

NOTE:
Because the air conditioner dehumidifies the air, turning it on will help keep the windows clear, even when blowing heated air using the defrost position (e) or heat & defrost position (d).

EXAMPLE

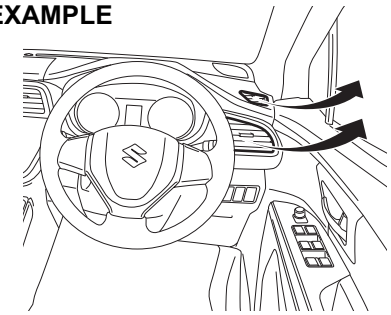

64MS091

NOTE:
If you need maximum defrosting:
- *select the defrost position (e) and fresh air position (f),*
- *set the blower speed selector to HIGH,*
- *adjust the temperature selector to the HOT end,*
- *push in the air conditioning switch (5) to turn on the air conditioning system, and*
- *adjust the side outlets so the air blows on the side windows.*

Maintenance

If you do not use the air conditioner for a long period, such as during winter, it may not give the best performance when you start using it again. To help maintain optimum performance and durability of your air conditioner, it needs to be run periodically. Operate the air conditioner at least once a month for one minute with the engine idling. This circulates the refrigerant and oil and helps protect the internal components.

If your air conditioner is equipped with air filters, clean or replace them as specified in the "Maintenance Schedule" in the "INSPECTION AND MAINTENANCE" section.

NOTE:
Your vehicle uses the air conditioning refrigerant HFC-134a, commonly called "R-134a". R-134a replaced R-12 around 1993 for automotive applications. Other refrigerants are available, including recycled R-12, but only R-134a should be used in your vehicle.

NOTICE
Using the wrong refrigerant may damage your air conditioning system. Use R-134a only. Do not mix or replace the R-134a with other refrigerants.

Automatic Heating and Air Conditioning System (Climate Control) (if equipped)

Description of Controls

EXAMPLE

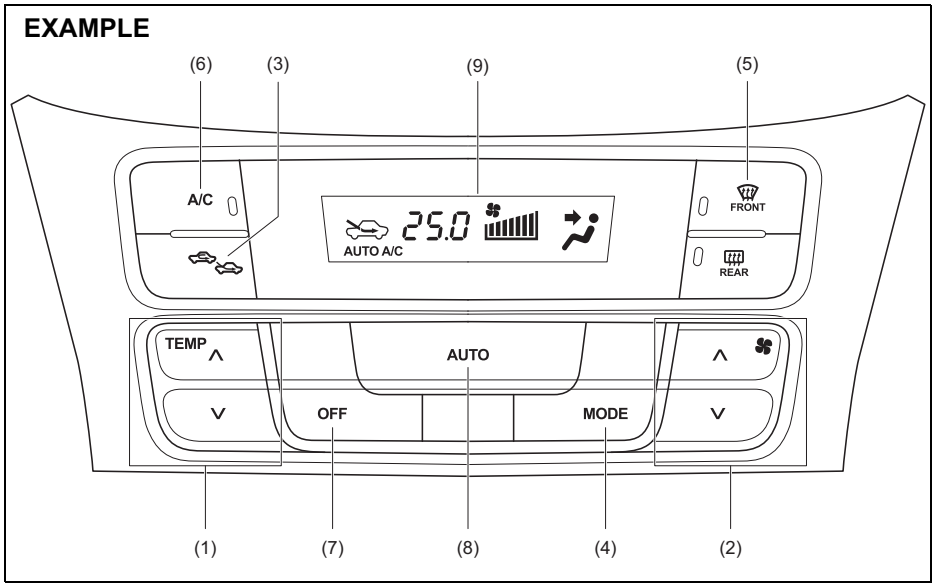

82PM050001

(1) Temperature selector
(2) Blower speed selector
(3) Air intake selector
(4) “MODE” switch
(5) Defrost switch
(6) Air conditioning switch
(7) “OFF” switch
(8) “AUTO” switch
(9) Display

Temperature selector (1)

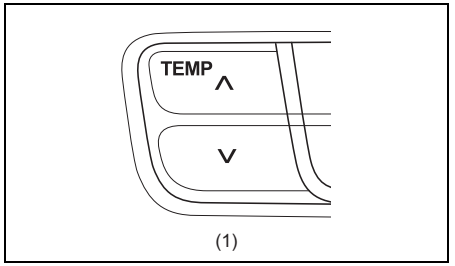

82PH053

Push upper part or lower part of the temperature selector (1) to adjust the temperature. The display (9) shows the selected temperature.

NOTE:
If you push the temperature selector (1) until “HI” or “LO” appears on the display, the climate control system will operate at maximum heating or cooling. The temperature of the air from the outlets may change suddenly while “LO” or “HI” is displayed, but this is normal.

NOTE:
When you change the units of temperature in the information display, the automatic heating and air conditioning system temperature display units will be changed automatically. Refer to “Information Display” in the “BEFORE DRIVING” section for details.

Blower speed selector (2)

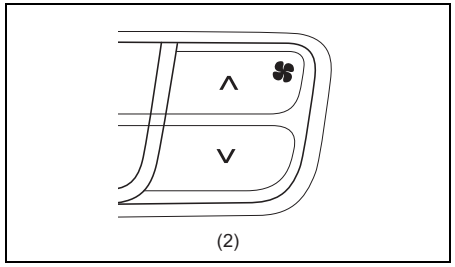

82PH054

The blower speed selector (2) is used to turn on the blower and to select blower speed.

If the “AUTO” switch (8) is pushed, the blower speed will vary automatically as the climate control system maintains the selected temperature.

Air intake selector (3)

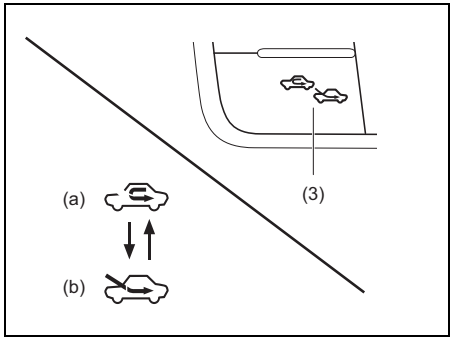

82PH055

Push the air intake selector (3) to change between the following modes.

If the “AUTO” switch (8) is pushed, the air intake will vary automatically as the climate control system maintains the selected temperature.

NOTE:
When you select the recirculated air mode, the automatic operation system is deactivated if you push the “AUTO” switch (8).

RECIRCULATED AIR (a)
When this mode is selected, outside air is shut off and inside air is recirculated. This mode is suitable when driving through an area with polluted air such as a tunnel, or when attempting to quickly cool down the vehicle.

FRESH AIR (b)
When this mode is selected, outside air is introduced.

The fresh air position (b) and recirculated air position (a) are selected alternately each time the air intake selector is pushed.

NOTE:
If you select the recirculated air position (a) for an extended period of time, the air in the vehicle can become contaminated. Therefore, you should occasionally select the fresh air position (b).

“MODE” switch (4)

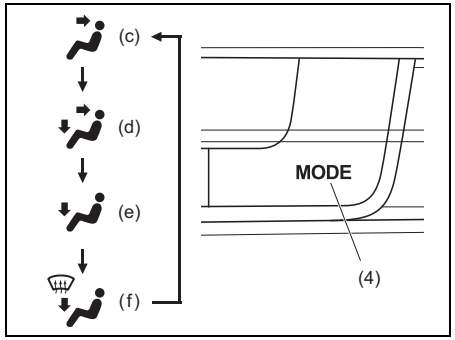

82PH056

Push the “MODE” switch (4) to change among the following functions. The indication of the selected mode appears on the display.

If the “AUTO” switch (8) is pushed, the air flow will vary automatically as the climate control system maintains the selected temperature.

Ventilation (c)

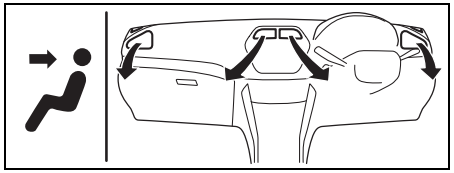

61M0100

Temperature-controlled air comes out of the center and side outlets.

Bi-level (d)

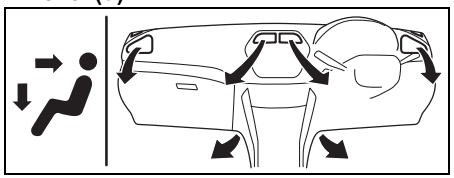

61M0101

Temperature-controlled air comes out of the floor, center and side outlets.

Heat (e)

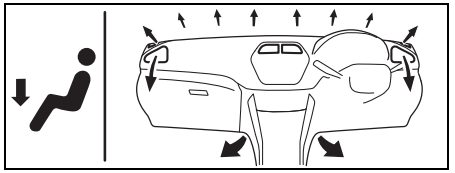

61M0102

Temperature-controlled air comes out of the floor outlets, also comes out of the windshield defroster outlets and also comes slightly out of the side defroster outlets and the side outlets.

Heat & defrost (f)

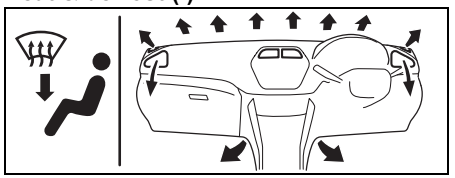

61M0103

Temperature-controlled air comes out of the floor outlets, the windshield defroster outlets, the side defroster outlets and the side outlets.

Defrost switch (5)

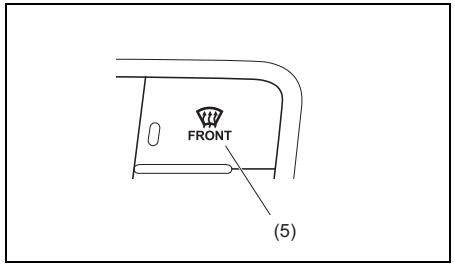

82PH057

Push the defrost switch (5) to turn on the defroster.

Defrost

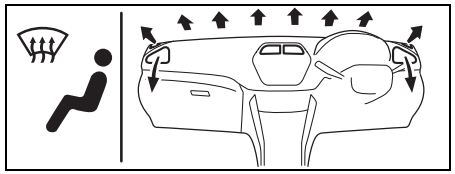

61M0106

Temperature-controlled air comes out of the windshield defroster outlets, the side defroster outlets and the side outlets.

NOTE:
When you push the defrost switch (5), the fresh air position (b) will be automatically selected and the air conditioning switch will automatically turn on ("A/C" will appear on the display). In cold weather, air flows out of the defroster outlets but the air conditioning does not turn on even though the A/C indicator comes on as well as the defrost indicator.

Air conditioning switch (6)

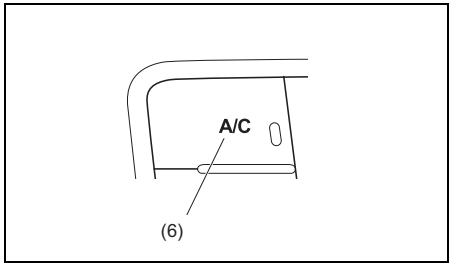

82PH058

The air conditioning switch (6) is used to turn on and off the air conditioning system only when the blower is on. To turn on the air conditioning system, push in the switch; "A/C" will appear on the display and the indicator on the switch will come on. To turn off the air conditioning system, push in the switch again; "A/C" and the indicator will go off.

You can use the air conditioning switch (6) to manually turn the air conditioner on or off according to your preference. When you turn the air conditioning switch off, the climate control system cannot lower the inside temperature below outside temperature.

System Operating Instructions

Automatic operation

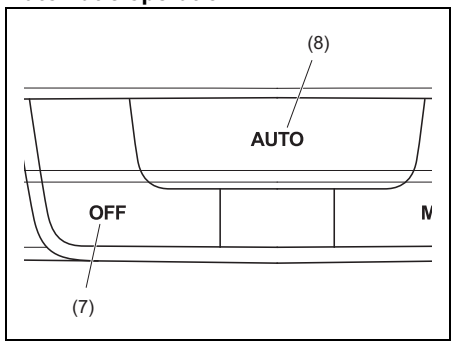

82PH059

You can let the climate control system work automatically. To set the system for fully-automatic operation, follow the procedure below.

1) Start the engine.
2) Push the “AUTO” switch (8).
3) Set the desired temperature by pushing the temperature selector (1).

The blower speed, air intake and air flow are controlled automatically to maintain the set temperature. However, the air flow is not changed to the defrost position automatically.

To turn the climate control system off, push the “OFF” switch (7).

NOTE:
If the “AUTO” on the display blinks, there is a problem in the heating system and/or air conditioning system. You should have the system inspected by an authorised Maruti Suzuki workshop.

NOTE:
- *To find the temperature at which you are most comfortable, start with the 25°C (75°F) setting, for example.*
- *If you push the temperature selector (1) until “HI” or “LO” appears on the display, the climate control system will operate at maximum heating or cooling.*
- *To avoid blowing cold air in cold weather or hot air in hot weather, the system will delay turning on the blower until warmed or chilled air is available.*
- *If your vehicle has been left in the sun with the windows closed, it will cool faster if you open the windows briefly.*
- *Even under automatic operation, you can set individual selectors to the manual mode. The manually selected functions are maintained, and the other functions remain under automatic operation.*
- *If the windshield and/or the front door windows are fogged, push the defrost switch (5) to turn on the defroster, or push the “MODE” switch (4) to change the air flow to the heat & defrost position (f) to defog the windows.*
- *To return the blower speed selector (2), air intake selector (3), and “MODE” switch (4) to automatic operation, push the “AUTO” switch (8).*

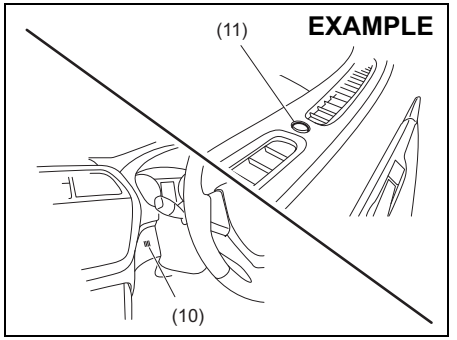

64MS149

Be careful not to cover the interior temperature sensor (10) located between the steering wheel and the climate control panel, or the solar sensor (11) located at the top of the central part of the dashboard. These sensors are used by the automatic system to regulate temperature.

Manual operation
You can manually control the climate control system. Set the selectors to the desired positions.

EXAMPLE

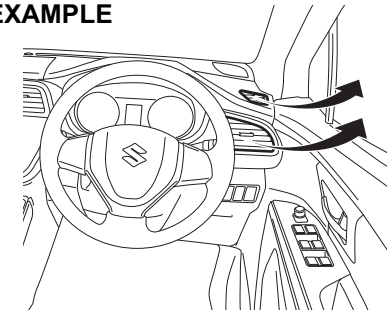

64MS091

NOTE:
If you need maximum defrosting:
- *push the defrost switch (5) to turn on the defroster (the air conditioning system will come on and the fresh air position (b) will be selected automatically),*
- *set the blower speed selector to HIGH,*
- *adjust the temperature selector to the "HI" indication on the display, and*
- *adjust the side outlets so the air blows on the side windows.*

Maintenance
If you do not use the air conditioner for a long period, such as during winter, it may not give the best performance when you start using it again. To help maintain optimum performance and durability of your air conditioner, it needs to be run periodically. Operate the air conditioner at least once a month for one minute with the engine idling. This circulates the refrigerant and oil and helps protect the internal components.

If your air conditioner is equipped with air filters, clean or replace them as specified in the "Maintenance Schedule" in the "INSPECTION AND MAINTENANCE" section.

NOTE:
Your vehicle uses the air conditioning refrigerant HFC-134a, commonly called "R-134a". R-134a replaced R-12 around 1993 for automotive applications. Other refrigerants are available, including recycled R-12, but only R-134a should be used in your vehicle.

NOTICE

Using the wrong refrigerant may damage your air conditioning system. Use R-134a only. Do not mix or replace the R-134a with other refrigerants.

Radio Antenna

EXAMPLE

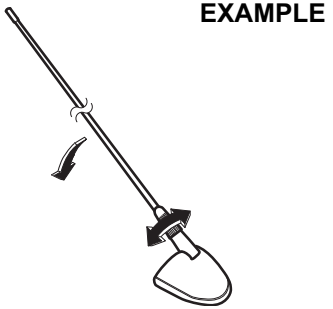

68KN028

The radio antenna on the roof is removable. To remove the antenna, turn it counterclockwise. To reinstall the antenna, turn it clockwise firmly by hand.

NOTICE

To avoid damage to the radio antenna:
- **Remove the antenna when using an automatic car wash.**
- **Remove the antenna when the antenna hits anything such as a low ceiling in a parking garage or putting a car cover over your vehicle.**

Audio System (if equipped)

Type A

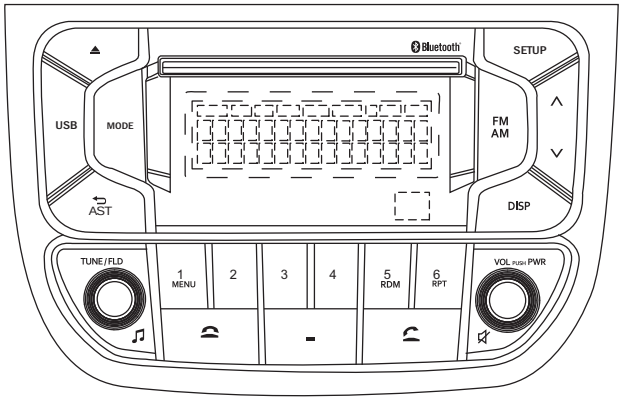

Type B

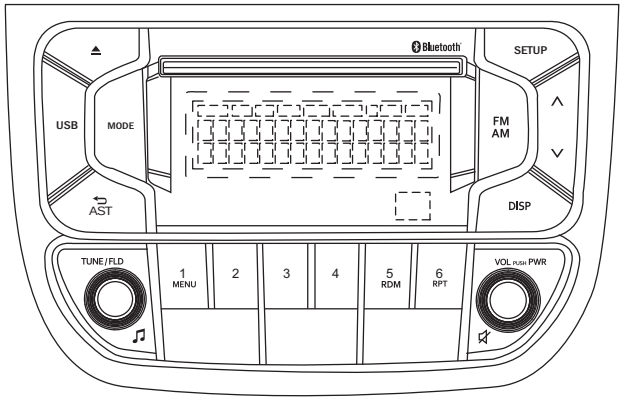

AM / FM /USB / BT / CD PLAYER

NOTE: For vehicle equipped with SMARTPLAY INFOTAINMENT SYSTEM, refer to the audio manual available with the vehicle.

Safety Information

⚠ WARNING

If you pay extended attention to operating the audio system or viewing the audio system display while driving, an accident can occur. If you set the sound volume too loud, it could prevent you from being aware of road and traffic conditions.

- **Keep your eyes on the road and your mind on the drive. Avoid paying extended attention to operating the audio system or viewing the audio system display.**
- **Familiarize yourself with the audio system controls and operation of the audio system before driving.**
- **Preset your favorite radio stations before driving so that you can quickly tune to them using the presets.**
- **Set the sound volume to a level that will allow you to continue to be aware of road and traffic conditions while driving.**

Notes on Discs

Precautions

- When the inside of the vehicle is very cold and the player is used soon after switching on the heater, condensation may form on the disc or the optical parts of the player and proper playback may not be possible. If condensation forms on the disc, wipe it off with a soft cloth. If condensation forms on the optical parts of the player, do not use the player for about one hour. This will allow the condensation to disappear normally.
- Driving on extremely bumpy roads which cause severe vibrations may cause sound to skip.
- This unit uses a precision mechanism. Even in the event that trouble arises, never open the case, disassemble the unit, or lubricate the rotating parts.
  Please bring the unit to an authorised Maruti Suzuki workshop.

Cautions on Handling

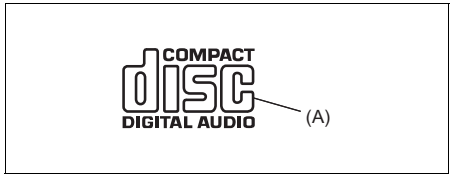

This unit has been designed specifically for playback of compact discs bearing mark (A) shown above.

No other discs can be played.

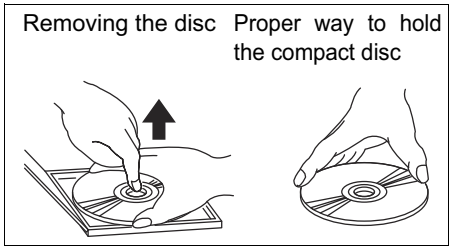

To remove the compact disc from its storage case, press down on the center of the case and lift the disc out, holding it carefully by the edges.

Always handle the compact disc by the edges. Never touch the surface.

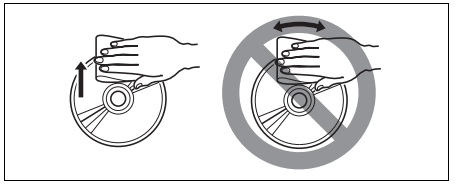

To remove fingermarks and dust, use a soft cloth, and wipe in a straight line from the center of the compact disc to the circumference.

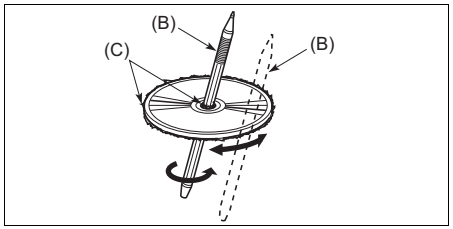

New discs may have some roughness around the edges. The unit may not work or the sound may skip if such discs are used. Use a ball-point pen (B), etc. to remove the roughness (C) from the edges of the disc before inserting it into the unit.

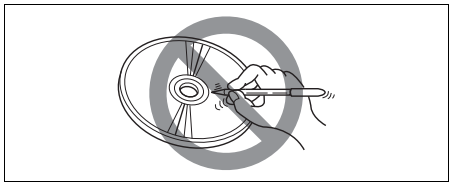

Never stick labels on the surface of the compact disc or write on the surface with a pencil or pen.

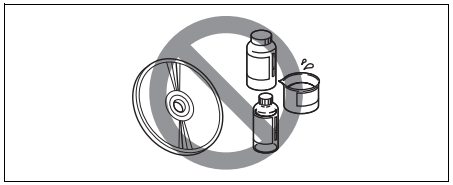

Do not use any solvents such as commercially available cleaners, anti-static spray, or thinner to clean compact discs.

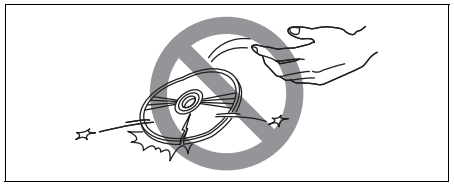

Do not use compact discs that have large scratches, are misshaped, or cracked, etc. Use of such discs will cause damage or prevent the system from operating properly.

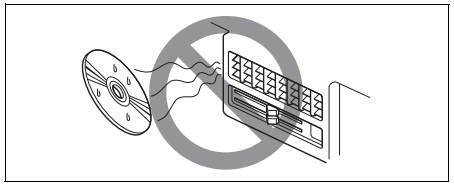

Do not expose compact discs to direct sunlight or any heat source.

NOTE:

- *Do not use commercially available CD protection sheets or discs equipped with stabilizers, etc.*
  These may get caught in the internal mechanism and damage the disc.
- *It may be impossible to play CD-R discs with this unit due to the recording conditions.*
- *CD-RW discs cannot be played with this unit.*

⚠ WARNING

This is a class I laser product. Use of controls or adjustments or performance of procedures other than those specified herein may result in hazardous radiation exposure.
Do not open covers and do not attempt to repair this unit by yourself. Refer servicing to qualified personnel.

Bluetooth®

The Bluetooth® word mark and logo are registered trademarks and are owned by the Bluetooth SIG, Ink.

Stop using this unit and a Bluetooth® ready device whenever requested.
This unit shares the communication frequency with other private or public wireless communication equipment such as a wireless LAN and other wireless communication radios.
You should stop using this unit whenever you are notified that your unit disturbs other wireless communication immediately.

Basic Operations

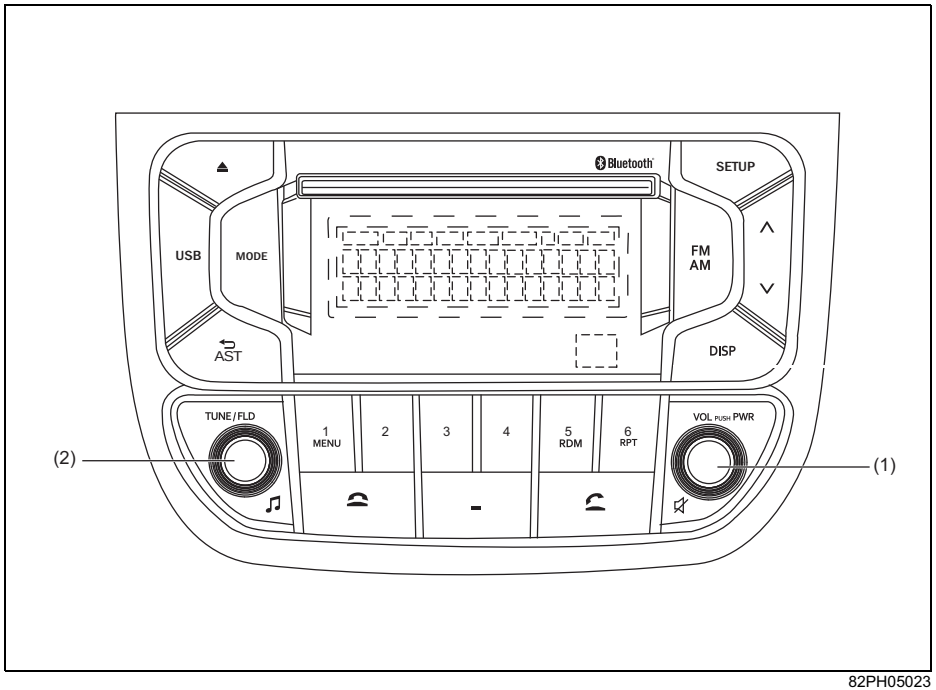

82PH05023

(1) VOL PUSH POWER, knob
(2) TUNE FOLDER, knob

Turning power on/off
Long Press the VOL PUSH POWER, knob (1).
The unit starts in the function mode it was in when the power was turned off last.

Adjusting the volume
Turn the VOL PUSH POWER, knob (1). Turning it clockwise increases the volume; turning it counterclockwise decreases the volume.

NOTE:
While driving, adjust the volume to an extent that sound and/or noise coming from outside the vehicle can be heard.

Mute
Press the VOL PUSH POWER, knob (1) to mute the sound. To cancel the mute, press the VOL PUSH POWER, knob (1) again.

Bluetooth® Mic *(3)

Type A audio - Internal Mic

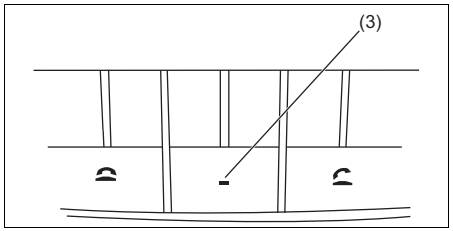

82PH05022

Type B audio - External Mic

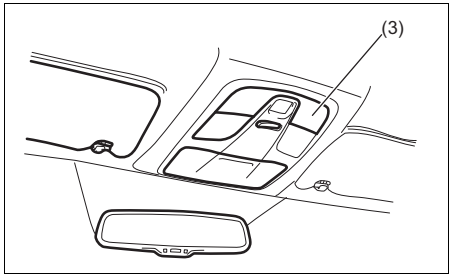

82PH05034

Adjusting bass /mid /treble /balance / fader

1) Press the TUNE FOLDER, ♫ knob (2). Each time the knob is pressed, sound adjustment will change as follows:

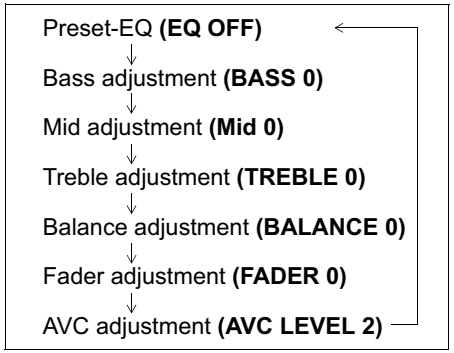

2) Turn the TUNE FOLDER, ♫ knob (2) to adjust the sound.

Adjusting the AVC (Auto volume control)

The Auto Volume Control (AVC) function automatically adjusts (increases/decreases) the sound volume in accordance with vehicle speed. The AVC control is provided with three selectable levels (LEVEL OFF, 1, 2, 3). The range of volume adjustment increases together with the LEVEL number.

1) Press the TUNE FOLDER, ♫ knob (2) several times until the AVC adjustment mode is selected.
2) Turn the TUNE FOLDER, ♫ knob (2) to select the desired AVC adjustment level. (Initial setting: LEVEL 2)

Preset-EQ

Preset-EQ calls up various sound types in accordance with the listening music type.

1) Press the TUNE FOLDER, ♫ knob (2) several times until “EQ” appears.
2) Turn the TUNE FOLDER, ♫ knob (2). Each time the knob is turned, preset EQ mode will change as follows:

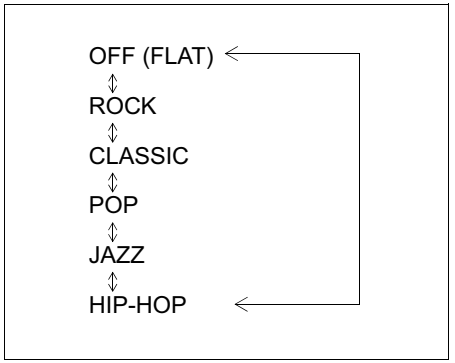

Listening to the Radio

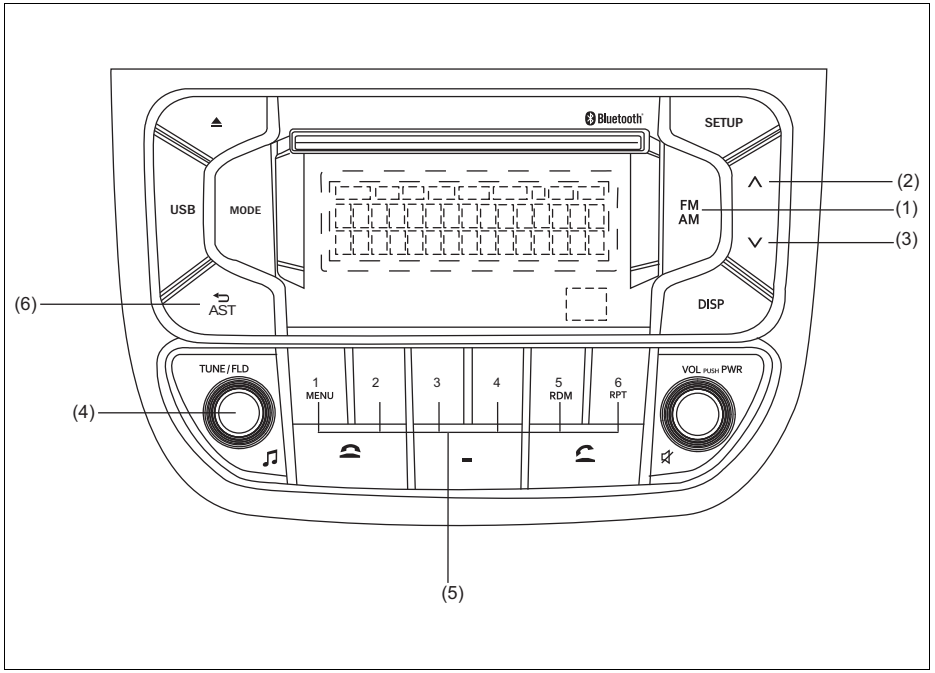

82PH05024

Display

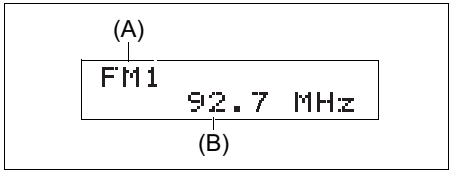

68PH05036

(1) FM/AM button
(2) Up button
(3) Down button
(4) TUNE FOLDER, ♫ knob
(5) Preset buttons ([1] to [6])
(6) ⮌ / AST button

(A) Band
(B) Frequency

Selecting the FM/AM band
Press the FM/AM button (1).
Each time the button is pressed, the reception band will change as follows:

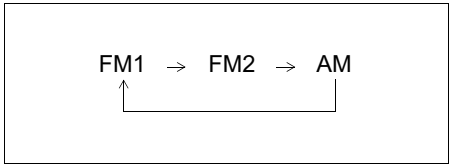

Seek tuning
Press the seek Up button (2) or the seek Down button (3).
The unit stops searching for a station at a frequency where a broadcast station is available.

Manual tuning
Turn the TUNE FOLDER, ♫ knob (4).
The frequency being received is displayed.

Preset memory
1) Select the desired station.
2) Hold down a desired button ([1] to [6]) of the Preset buttons (5) to which you want to store the station for 2 seconds or longer.

Auto store
Hold down the ⮌/AST button (6) for 1 seconds or longer.
Six stations in good reception will automatically be stored to the Preset buttons (5) in order, starting from a station whose frequency is the lowest.

NOTE:
- *Auto store can be released by pressing AST button (6) while auto store is under way.*
- *When the auto store is performed, the station previously stored in the memory at the position is overwritten.*
- *When there are fewer than 6 stations that can be stored even if 1 round of auto store operation is performed, no station will be stored at the remaining Preset buttons (6). Remaining preset displays "------".*
- *6 stations can be preset for FM1 and FM2 in common, and 6 stations for AM in auto store mode.*

Radio Reception
Radio reception can be affected by environment, atmospheric conditions, or radio signal's power and distance from the station. Nearby mountains and buildings may interfere or deflect radio reception, causing poor reception. Poor reception or radio static can also be caused by electric current from overhead wires or high voltage power lines.

Listening to a CD

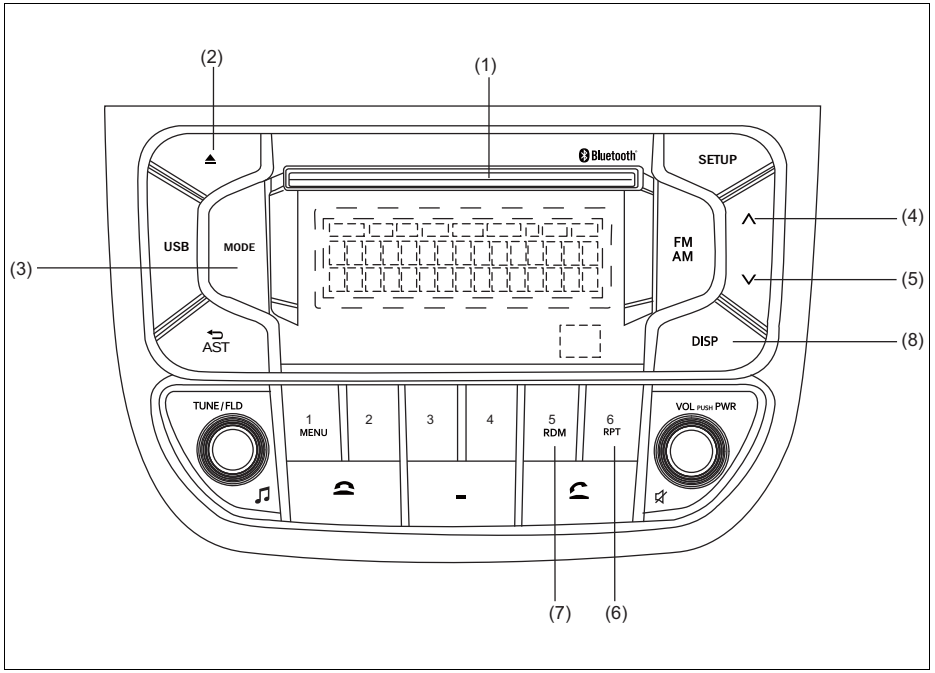

82PH05025

Display

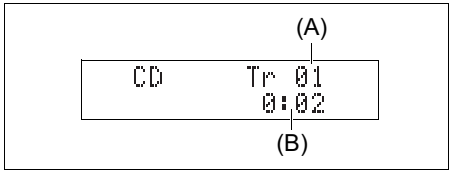

(1) Insertion slot
(2) Eject button
(3) Mode button
(4) Up button
(5) Down button
(6) RPT button
(7) RDM button
(8) DISP button

(A) Track number
(B) Play time

NOTE:
This product does not support 8 cm CD (sometimes called as “mini single CD”, “3-inch CD”, “CD3”, etc.).

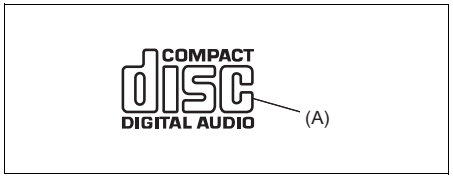

- CDs or CD-ROMs carrying no mark (A) cannot be used.
- Some discs recorded in CD-R/CD-RW format may sometimes be impossible to use.

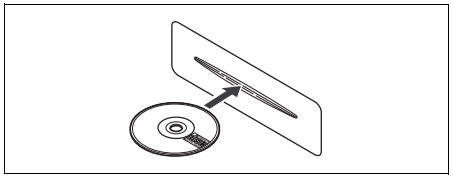

- A CD is to be inserted with its label side up.
- When there is a CD already in the unit, it is impossible to insert another CD without ejecting the CD in the unit. Do not use force to insert a CD into the CD insertion slot.

NOTICE

- **Never insert your finger or hand into the CD insertion slot. Never insert foreign objects.**
- **Never insert a CD with glue coming out from adhesive tape or a rental CD label or with a trace indicating that adhesive tape or a rental CD label has been removed. This may cause the CD not to eject or result in a malfunction.**

Loading a CD
Insert a CD in the Insertion slot (1).
When a CD is loaded, play starts.

Ejecting a CD
Press the Eject button (2).
When the ignition mode is “LOCK”, the CD remained ejected for around 15 seconds or longer will automatically be drawn inside the unit. (Auto reload function)
The backup eject function:
This function allows you to eject a CD by pressing the Eject button (2) even when the ignition mode is off.

NOTICE

If you forcefully try to push an ejected CD inside the unit before auto reloading, the disc surface might be scratched.
When reloading a CD, remove it from the unit completely before reloading.

Listening to a CD
When a CD is inserted, playback will automatically start.
When a CD is already inside the unit, press the MODE button (3) to enter the CD mode & start playback.

Selecting a track
- Press the Up button (4) to listen to the next track.
- Press the Down button (5) twice to listen to the previous track.
  When the Down button (5) is pressed once, the track currently being played will start from the beginning again.

Fast forwarding/Rewinding a track
- Hold down the Up button (4) to fast forward the track.
- Hold down the Down button (5) to fast rewind the track.

Random playback
Press the RDM button (7).
Each time the button is pressed, the mode will change as follows:

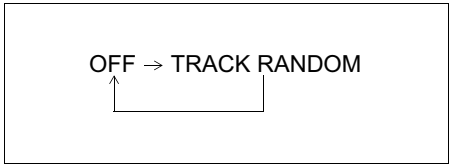

- TRACK RANDOM
  The random indicator “RDM” will light.
  The tracks in the loaded disc will be played in random order.

Repeat playback
Press the RPT button (6).
Each time the button is pressed, the mode will change as follows:

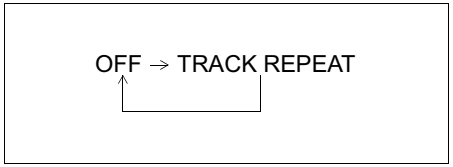

- TRACK REPEAT
  The repeat indicator “RPT” will light.
  The track currently being played will be played repeatedly.

Display change
Press the DISP button (8).
Each time the button is pressed, display will change as follows:

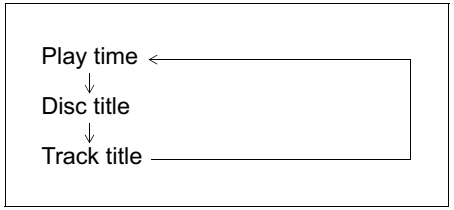

NOTE:
- *“NO TITLE” will be displayed when there is no text information in the disc currently being played.*
- *If text data contains more than 15 characters, the “>” mark will appear at the right end. Audio displays text information three times automatically. Later holding down the DISP button (8) for 1 second or longer can display the next page for one time only.*

Listening to an MP3/WMA Disc

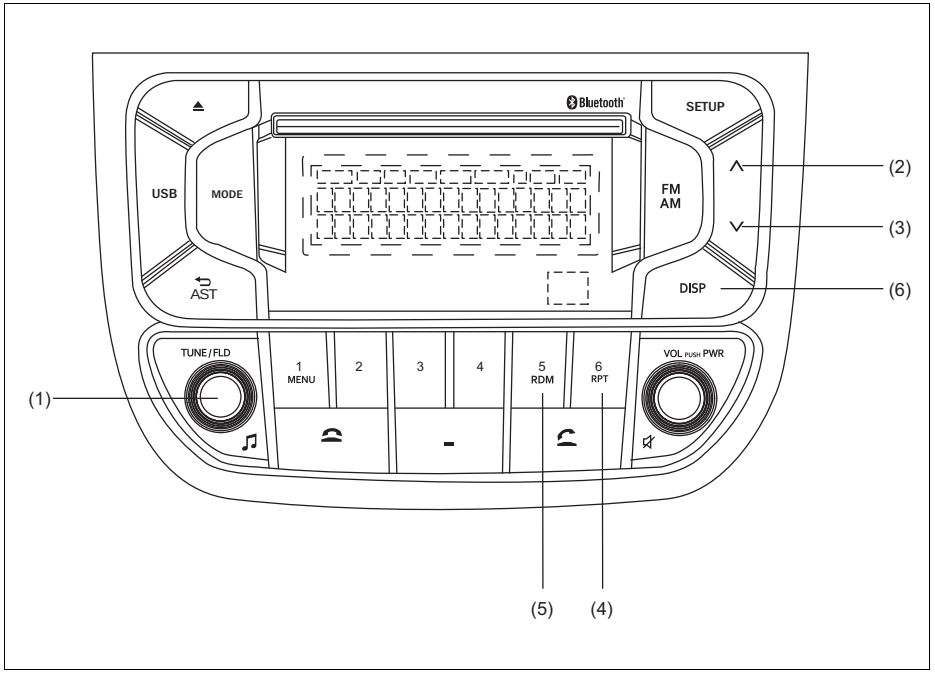

82PH05026

Display

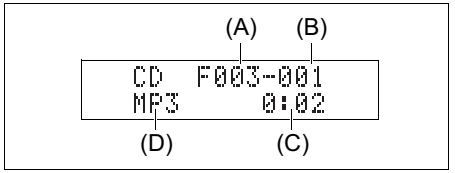

(1) TUNE FOLDER, ♫ knob
(2) Up button
(3) Down button
(4) RPT button
(5) RDM button
(6) DISP button

(A) Folder number
(B) Track number
(C) Play time
(D) DISC type

Selecting a folder
Turn the TUNE FOLDER, knob (1) to select a folder.

Selecting a track
- Press the Up button (2) to listen to the next track.
- Press the Down button (3) twice to listen to the previous track.
  When the Down button (3) is pressed once, the track currently being played will start from the beginning again.

Fast forwarding/Rewinding a track
- Hold down the Up button (2) to fast forward the track.
- Hold down the Down button (3) to fast rewind the track.

Random playback
Press the RDM button (5).
Each time the button is pressed, the mode will change as follows:

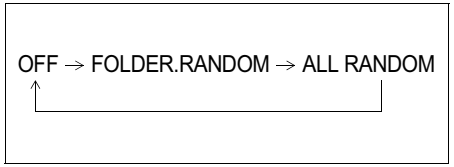

- FOLDER RANDOM
  The random indicator “F.RDM” will light.
  The tracks in the current folder will be played in random order.
- ALL RANDOM
  The random indicator “RDM” will light.
  The tracks in the loaded disc will be played in random order.

Repeat playback
Press the RPT button (4).
Each time the button is pressed, the mode will change as follows:

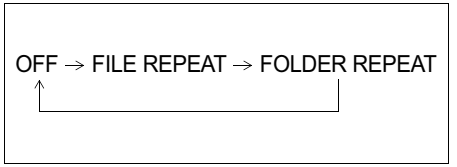

- FILE REPEAT
  The repeat indicator “RPT” will light.
  The track currently being played will be played repeatedly.
- FOLDER REPEAT
  The repeat indicator “F.RPT” will light.
  All tracks in the currently selected folder will be played repeatedly.

Display change
Press the DISP button (6).
Each time the button is pressed, display will change as follows:

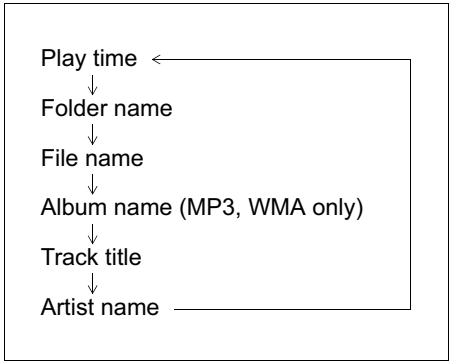

NOTE:
- *"NO TITLE" will be displayed when there is no text information in the disc currently being played.*
- *If text data contains more than 15 characters, the ">" mark will appear at the right end. Audio displays text information three times automatically. Later holding down the DISP button(6) or 1 second or longer can display the next page for one time only.*

Notes on MP3/WMA

What is MP3?
- MP3 (MPEG audio layer3) is an audio compression format that has become the standard format among PC users. Its merit is that the original audio data is compressed to approximately 1/10 and high sound quality is maintained. This means that it is possible to store the data of approximately 10 music CDs on a single CD-R/RW disc, which in turn makes it possible to play music for a long time without having to change the disc.

What is WMA?
- An abbreviation of "Windows Media Audio," WMA is an audio compression format developed by Microsoft.
- WMA files for which the DRM (Digital Rights Management) function is ON cannot be played.
- Windows Media™ and the Windows® logo are trademarks or registered trademarks of Microsoft Corporation in the United States and other countries.

Points to remember when making MP3/WMA files Common
- High bit rate and high sampling frequency are recommended for high quality sounds.
- Selecting VBR (Variable Bit Rate) is not recommended. Selecting VBR may cause display of incorrect playing time and jumpiness of playback.
- Playback sound quality varies depending on the encoding environment. For details, refer to the user manual of the encoding software and the writing software in use.

NOTICE

Never assign the ".mp3", or ".wma" file name extension to a file if it is not in the MP3/WMA format file. Failure to observe this may result in damage to the speaker due to noise production.

Recording MP3/WMA files on a CD media
- It is recommended not to write both CD-DA files and MP3/WMA files on a disc.
- If both CD-DA files and MP3/WMA files are on the same disc, tracks may not be played in the correct order or some tracks may not be played at all.

- When storing both MP3 data and WMA data on the same disc, sort and place them in different folders.
- Do not write files other than MP3/WMA files and unnecessary folders on a disc.
- MP3/WMA files should be named to meet the standards and the file system specifications as shown below.
- The file extension ".mp3", or ".wma" should be assigned to files based on their format independently.
- You may encounter a trouble in playing MP3/WMA files or displaying information of MP3/WMA files depending on the writing software or CD recorder in use.
- This unit does not have a play list function.
- It is recommended to write discs in Disc-at-Once mode even though Multi-session mode is supported.

Compression formats
MP3
- Bit rate:
  MPEG1 Audio Layer III: 32 k - 320 kbps
  MPEG2 Audio Layer III: 8 k - 160 kbps
  MPEG2.5 Audio Layer III: 8 k - 160 kbps
- Sampling frequency:
  MPEG1 Audio Layer III: 32 k/44.1 k/48 kHz
  MPEG2 Audio Layer III: 16 k/22.05 k/24 kHz
  MPEG1 Audio Layer III: 8 k/11.025 k/12 kHz

WMA (Ver. 7, Ver. 8, Ver. 9*)
- Bit rate: 5 ~ 384 kbps
- Sampling frequency: 32 k/44.1 k/48 kHz

Supported file systems
ISO 9660 Level 1/Level 2, Joliet, Romeo

Maximum number of files/folders
- Maximum number of files: 999
- Maximum number of files in a folder: 999
- Maximum depth of tree structure: 99
- Maximum number of folders: 99
  (Root folder is included.)

Recording MP3/WMA files on a CD
- Playback or display may not be possible depending on the type of CD in use or the condition of the recording.

Depending on the connected CD memory, the files may be played in different order from the order that the files were stored.

Listening to files stored in a USB device

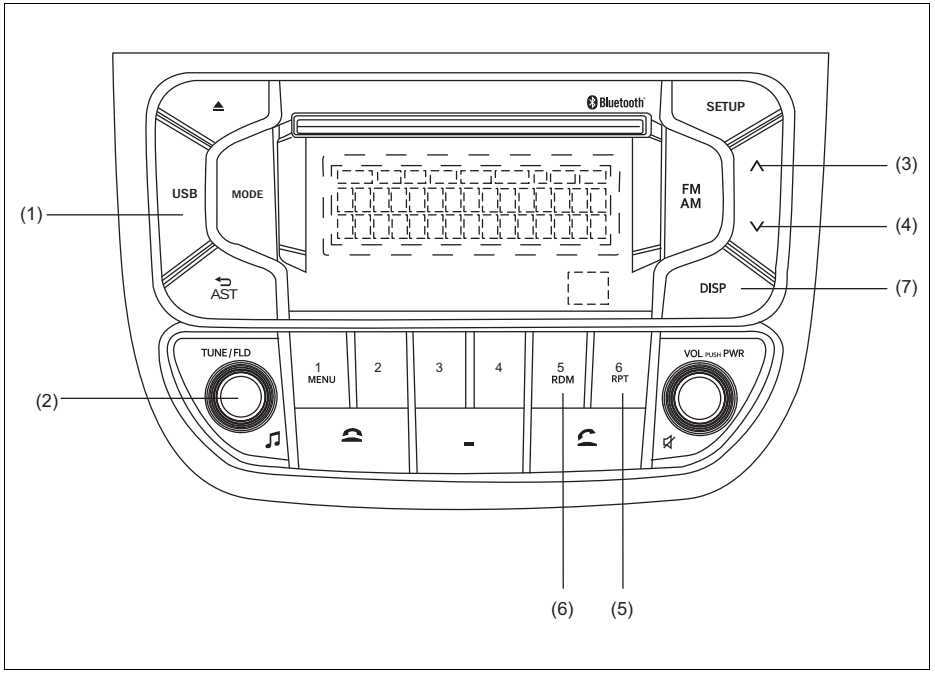

82PH05027

Display

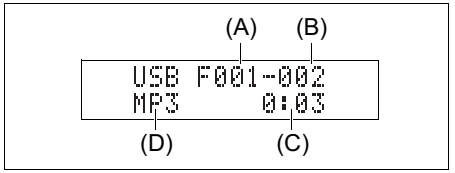

(1) USB button
(2) TUNE FOLDER, ♫ knob
(3) Up button
(4) Down button
(5) RPT button
(6) RDM button
(7) DISP button

(A) Folder number
(B) Track number
(C) Play time
(D) File type

NOTICE

Do not connect any USB device other than a USB memory or a USB audio player. Do not connect multiple USB devices to the USB connector using a USB hub, etc. Supplying power to multiple USB devices from the connector could cause overheating and smoking.

Selecting a USB device mode
Press the USB device mode (1).

Selecting a folder
Turn the TUNE FOLDER, ♫ knob (2) to select the desired folder.

Selecting a track
- Press the Up button (3) to listen to the next track.
  Press the Down button (4) twice to listen to the previous track.
  When the Down button (4) is pressed once, the track currently being played will start from the beginning again.

Fast forwarding/Rewinding a track
- Hold down the Up button (3) to fast forward the track.
- Hold down the Down button (4) to fast rewind the track.

Random playback
Press the RDM button (6).
Each time the button is pressed, the mode will change as follows:

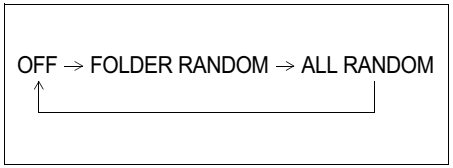

- FOLDER RANDOM
  The random indicator “F.RDM” will light.
  The tracks in the currently selected folder will be played in random order.
- ALL RANDOM
  The random indicator “RDM” will light.
  The tracks in the connected USB device will be played in random order.

Repeat playback
Press the RPT button (5).
Each time the button is pressed, the mode will change as follows:

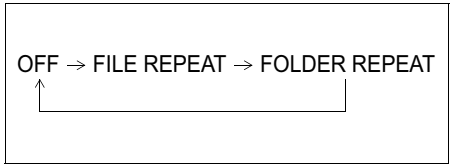

- FILE REPEAT
  The repeat indicator “RPT” will light.
  The track currently being played will be played repeatedly.
- FOLDER REPEAT
  The repeat indicator “F.RPT” will light.
  All the tracks in the folder currently selected will be played repeatedly.

Display change
Press the DISP button (7).
Each time the button is pressed, display will change as follows:

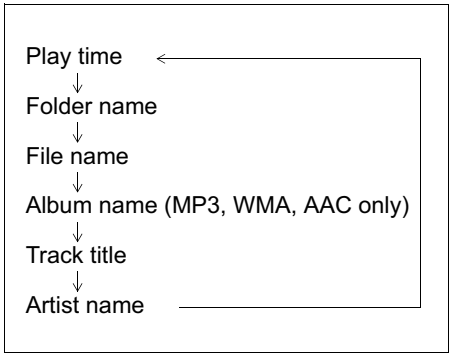

NOTE:
- *“NO TITLE” will be displayed when there is no text information in the file currently being played.*
- *If text data contains more than 15 characters, the “>” mark will appear at the right end. Audio displays text information three times automatically. Later holding down the DISP button (7) for 1 second or longer can display the next page for one time only.*

Notes on USB device

Compatible USB devices

- USB Mass Storage Class
  For details as to whether your USB memory/USB Audio is compatible with USB Mass Storage Class, please contact the USB memory/USB Audio manufacturer.
- USB Standard Compatibility 1.1/2.0 Full Speed
- File System FAT12/16/32
- Maximum current less than 1.0 A
- If devices such as USB hub, extension cable are connected to the audio system, it may not be recognized. In such case connect the USB device directly to the audio system.
- Devices such as MP3 player/Mobile phone/digital camera may not be recognized by the audio system for playing music.
- Device (Smart phone) featuring Media Transfer protocol (MTP), music search can take long time. This depends on the device (Smart phone) type and the files/folders present in the device (Smart phone).

USB device connection

- When connecting a USB device, make sure that the connector is pushed all the way into the port.
- Do not leave the USB device for long periods of time in places inside the vehicle where the temperature can rise too high.
- Back up any important data beforehand. We cannot accept responsibility for any lost data.
- It is recommended not to connect a USB device that contains data files other than MP3/WMA/AAC format.

Recording MP3/WMA/AAC files on a USB device

- Playback or display may not be possible depending on the type of USB device in use or the condition of the recording.
- Depending on the connected USB memory, the files may be played in different order from the order that the files were stored.

Compression formats

MP3

- Bit rate:
  MPEG1 Audio Layer III: 32 k - 320 kbps
  MPEG2 Audio Layer III: 8 k - 160 kbps
  MPEG2.5 Audio Layer III: 8 k - 160 kbps
- Sampling frequency:
  MPEG1 Audio Layer III: 32 k/44.1 k/48 kHz
  MPEG2 Audio Layer III: 16 k/22.05 k/24 kHz
  MPEG1 Audio Layer III: 8 k/11.025 k/12 kHz

WMA (Ver. 7, Ver. 8, Ver. 9*)

- Bit rate: 5 ~ 384 kbps
- Sampling frequency: 32 k/44.1 k/48 kHz

AAC (compliant to ISO/IEC 14496-3)

- Bit rate: 8k - 384 kbbs including VBR
  Sampling frequency: 8 - 96 kHz

Maximum number of files/folders

- Maximum number of files: 5000
- Maximum number of files in a folder: 5000
- Maximum depth of tree structure: 1000
- Maximum number of folders: 1000
  (Root folder is included.)

Notes on AAC

What is AAC?

An abbreviation of “Advanced Audio Coding,” AAC is an audio compression format used by MPEG2 and MPEG4.

Listening to an iPod®

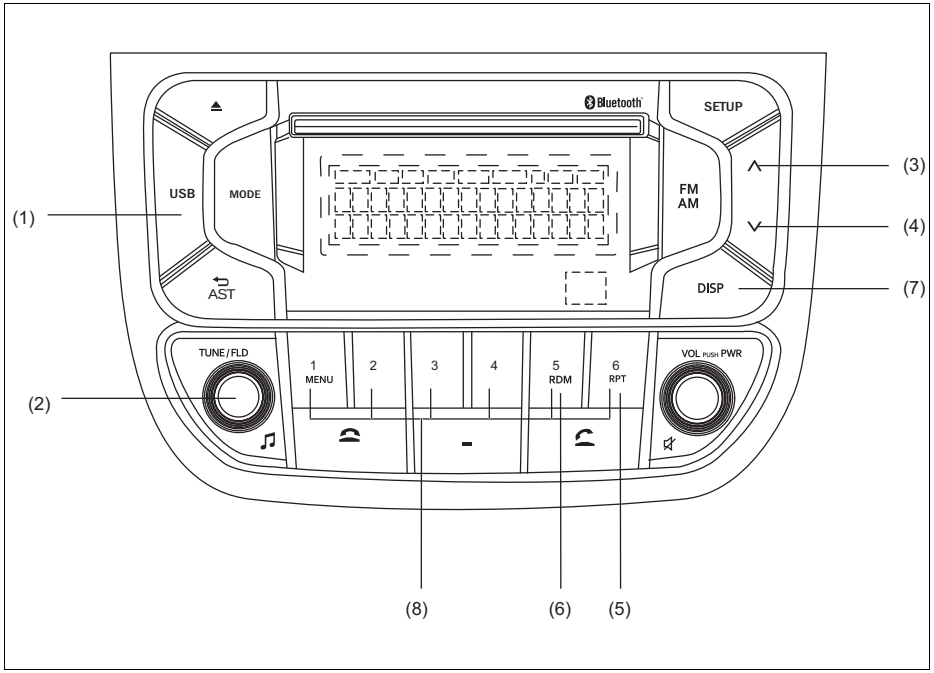

82PH05028

Display

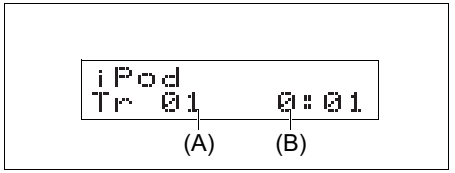

82PH05035

(1) USB button
(2) TUNE FOLDER, ♫ knob
(3) Up button
(4) Down button
(5) RPT button
(6) RDM button
(7) DISP button
(8) Preset buttons ([1] to [6])

(A) Track number
(B) Play time

Selecting an iPod® mode

Press the USB button (1).

Selecting a track

- Press the Up button (3) to listen to the next track.
- Press the Down button (4) twice to listen to the previous track.
  When the Down button (4) is pressed once, the track currently being played will start from the beginning again.

Fast forwarding/Rewinding a track
- Hold down the Up button (3) to fast forward the track.
- Hold down the Down button (4) to fast rewind the track.

Random playback
Press the RDM button (6).
Each time the button is pressed, the mode will change as follows:

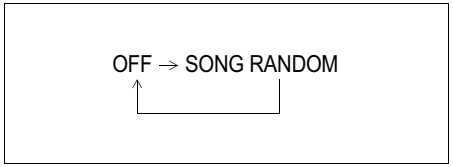

- SONG RANDOM
  The random indicator “RDM” will light.
  The tracks in the iPod® will be played in random order.

Repeat playback
Press the RPT button (5).
Each time the button is pressed, the mode will change as follows:

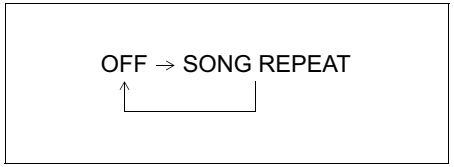

- SONG REPEAT
  The repeat indicator “RPT” will light.
  The track currently being played will be played repeatedly.

Display change
Press the DISP button (7).
Each time the button is pressed, display will change as follows:

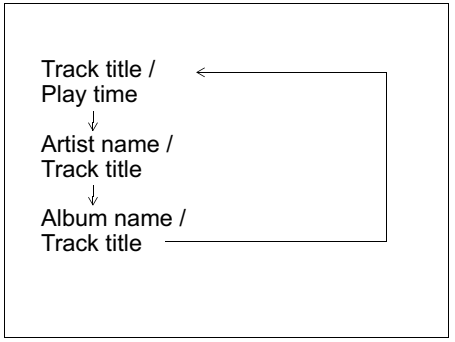

NOTE:
If text data contains more than 15 characters, the “>” mark will appear at the right end. Audio displays text information three times automatically. Later holding down the DISP button (7) for 1 second or longer can display the next page for one time only.

Playing Mode selection

1) Press the menu button numbered [1] of the Preset buttons (8) for 1 second or longer.
2) Turn the TUNE FOLDER, ♫ knob (2). Each time the knob is turned, the mode will change as follows:

3) Press the TUNE FOLDER, ♫ knob (2) to select the desired mode.

NOTE:

- *When the button numbered [5] or [6] of the Preset buttons (8) is pressed, the previous mode will be displayed.*

Notes on iPod®

Supported iPod®

- iPod® touch (6th generation)
- iPod® touch (5th generation)
- iPod® touch (4rd generation)
- iPod® touch (3rd generation)
- iPod® touch (2nd generation)
- iPod® touch (1st generation)
- iPod® classic
- iPod® nano (7th generation)
- iPod® nano (6th generation)
- iPod® nano (5th generation)
- iPod® nano (4th generation)
- iPod® nano (3rd generation)
- iPod® nano (2nd generation)
- iPod® nano (1st generation)
- iPhone® 6 Plus
- iPhone® 6
- iPhone® 5S
- iPhone® 5
- iPhone® 4S
- iPhone® 4
- iPhone® 3GS

* Some functions may not be available depending on the model of iPod®.
* iPod® is a trademark of Apple Inc., registered in the U.S. and other countries.
* iPhone® is a trademark of Apple Inc., registered in the U.S. and other countries.
* Apple is not responsible for the operation of this device or its compliance with safety and regulatory standards.

iPod® connection

- Make sure to detach the iPod® after turning the ignition switch to the “LOCK” position. The iPod® may not be shut down when it is being connected and may result in battery depletion.
- Please do not connect iPod® accessories such as an iPod® remote control or headphones while connecting the iPod® with the unit. The unit may not operate correctly.

AUX Function

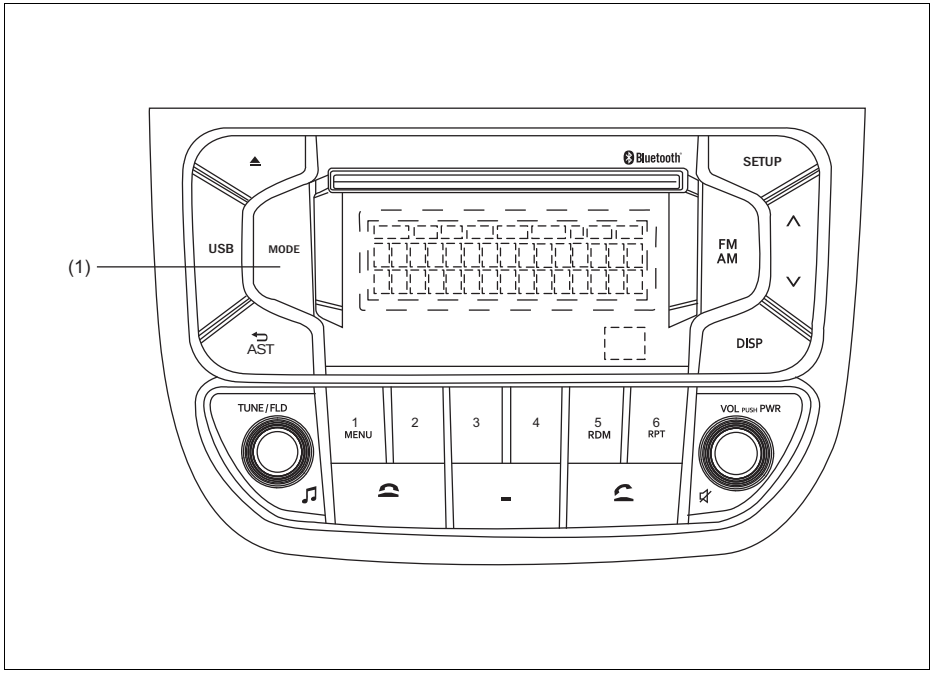

82PH05029

(1) MODE button

AUX connection

To listen to auxiliary audio sources (sold separately) through the unit, follow the instruction below.

1) Connect the auxiliary audio source to the AUX/USB socket (separately attached) with an AUX cable.
2) Each time the button is pressed, the mode will change as follows:

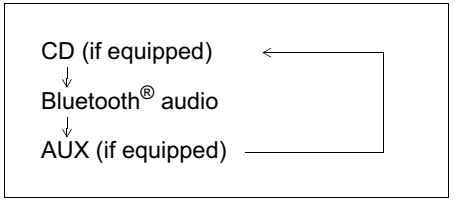

⚠ CAUTION

- **Before connection, mute the unit, and also keep the volume of the auxiliary audio source within a range that will not cause distortion.**
- **When the audio source is turned off, noise may be emitted. Be sure to turn off the unit or switch to another mode before turning off the audio source.**

NOTE:
- *Please consult your place of purchase for details about whether a given auxiliary audio source can be connected and the proper auxiliary cord to use.*
- *The volume and tone controls of the auxiliary audio source can be adjusted on the unit.*

Bluetooth® Hands-Free (if equipped)

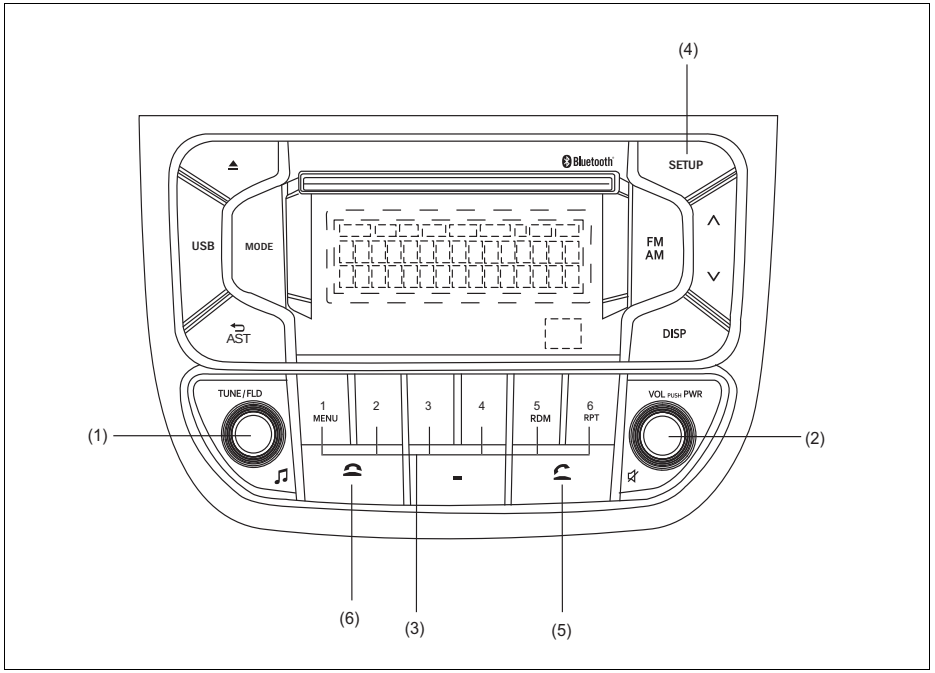

82PH05030

(1) TUNE FOLDER, ♫ knob
(2) VOL PUSH POWER, 🔇 knob
(3) Preset buttons

Steering switch (for type-2 Audio)

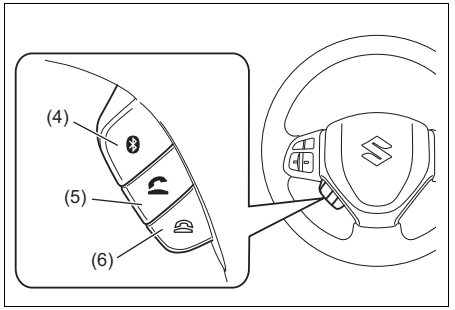

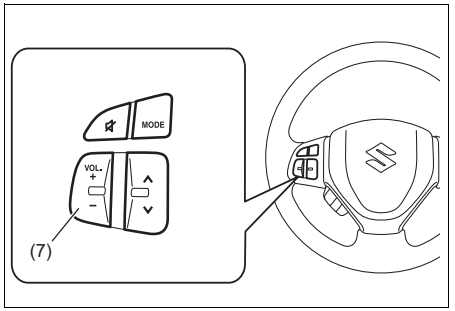

(4) Bluetooth® setup button
(5) Off Hook button
(6) On Hook button
(7) VOL switch

Phone registration
To use the hands-free function with this unit, it is required to register the phone in advance

1) Press the Bluetooth® setup button (4). The Bluetooth® setup menu will be displayed.
2) Turn the TUNE FOLDER, knob (1) to select “Setup Bluetooth”, and press the knob (1) to determine the selection.
3) Select “Pairing”, and press the knob (1) to determine the selection.
4) Select “Maruti Suzuki” from the Bluetooth® menu of the phone and establish the pairing.
   Refer to the manual of the phone in use for further information.
5) Enter the Passkey displayed on the unit to the phone, if required.
6) Press the On Hook button (6) to exit BT Setup menu.

NOTE:
- *When selecting “Go Back” option or button, the previous menu will be displayed.*
- *When additionally registering a phone, operate the same step from 1).*
- *Up to 5 phones can be registered.*
- *To set up a new phone, disconnect the current audio player from the unit, Connect the device again after phone setup is completed if necessary.*
- *When failed to establish the pairing within 60 seconds, the connecting operation will be canceled. “Connection failed” will be displayed. Please try again or refer to the manual of the phone in use for how to establish the pairing with the phone.*
- *Bluetooth/Telephone setup mode can be entered only during vehicle is stationary (or speed less than ~ 8 kmph)*

Receiving a call
Press the Off Hook button (5) to receive a call.

Ending a call
Press the On Hook button (6) to end a call.

Rejecting a call (only for supported models)
Press the On Hook button (6) to reject a incoming call.

Adjusting the listening volume
- Turn the VOL PUSH POWER, knob (2) during a call.
  Turning it clockwise increases the volume; turning it counterclockwise decreases the volume.
- Press the VOL switch (7) during a call. Pressing “+” of the switch increases the volume, pressing “-” of the switch decreases the volume.

Adjusting the ring volume
- Turn the VOL PUSH POWER, knob (2) while a call coming in.
  Turning it clockwise increases the volume; turning it counterclockwise decreases the volume.
- Press the VOL switch (7) during a call. Pressing "+" of the switch increases the volume, pressing "-" of the switch decreases the volume.

Adjusting the call or ringtone volume
Follow the instructions below to adjust the call or ringtone volume.
1) Press the Bluetooth® setup button (4). The Bluetooth® setup menu will be displayed.
2) Turn the TUNE FOLDER, knob (1) to select "Setup Telephone", and press the knob (1) to determine the selection.
3) Turn the TUNE FOLDER, knob (1) to select "Sound Setting", and press the knob (1) to determine the selection.
4) Turn the TUNE FOLDER, knob (1) to select "Call Volume" or "Ringtone Volume", and press the knob (1) to determine the selection.
   The current call or ringtone volume will be displayed.
5) Turn the TUNE FOLDER, knob (1) to select desired call or ringtone volume, and press the knob (1) to determine the selection.

NOTE:
When selecting "Go Back" option or button, the previous menu will be displayed.

Selecting the Ringtone
Follow the instructions below to select a ringtone.
1) Press the Bluetooth® setup button (4). The Bluetooth® setup menu will be displayed.
2) Turn the TUNE FOLDER, knob (1) to select "Setup Telephone", and press the knob (1) to determine the selection.
3) Turn the TUNE FOLDER, knob (1) to select "Sound Setting", and press the knob (1) to determine the selection.
4) Turn the TUNE FOLDER, knob (1) to select "Ringtone", and press the knob (1) to determine the selection. The current ringtone will be displayed.
5) Turn the TUNE FOLDER, knob (1) to select desired ringtone, and press the knob (1) to determine the selection.

NOTE:
When selecting "Go Back" option or button, the previous menu will be displayed.

Registration in Phonebook
Registration of numbers in the phonebook. Follow the instructions below to register phone numbers in the Phonebook of the unit.
1) Press the Bluetooth® setup button (4). The Bluetooth® setup menu will be displayed.
2) Turn the TUNE FOLDER, knob (1) to select "Setup Telephone", and press the knob (1) to determine the selection.
3) Turn the TUNE FOLDER, knob (1) to select "Setup Phonebook", and press the knob (1) to determine the selection.
4) Turn the TUNE FOLDER, knob (1) to select "Add Contacts", and press the knob (1) to determine the selection.
5) Turn the TUNE FOLDER, knob (1) to select "Overwrite All" and press the knob (1) to determine the selection.
6) Press or turn the TUNE FOLDER, knob (1) to select "Confirm", and press the knob (1) to determine the selection.
7) When contacts are transferred, "Transferred" will be displayed followed by "Setup Phonebook" display.

NOTE:
- *When selecting "Go Back" option or ⮌ button the previous menu will be displayed.*
- *Up to 1000 numbers can be registered in Phonebook.*

Transfer of call history (Call History)
Follow the instructions below to transfer call history of the registered phone.
1) Press the Bluetooth® setup button (4). The Bluetooth® setup menu will be displayed.
2) Turn the TUNE FOLDER, ♫ knob (1) to select "Setup Telephone", and press the knob (1) to determine the selection.
3) Turn the TUNE FOLDER, ♫ knob (1) to select "Call History", and press the knob (1) to determine the selection.
4) Select "Overwrite Call History?", and press the knob (1) to determine the selection.
5) Select "Confirm", and press the knob (1) to transfer the call history from the phone.

NOTE:
When selecting "Go Back" option or ⮌ button, the previous menu will be displayed.

Making a call by Phonebook
Follow the instructions below to dial a number registered in Phonebook.
1) Press the Off Hook button (5). The Bluetooth® phonebook menu will be displayed. Press the knob (1) to determine the selection
2) Turn the TUNE FOLDER, ♫ knob (1) to select the initial of the name you would like to make a call, and press the knob (1) to determine the selection. The registered name will be displayed in sequence. If name have been registered together with numbers, the names will be displayed.
3) Turn the TUNE FOLDER, ♫ knob (1) to select "Dial", and press the knob (1) to determine the selection.
4) The number registered with the displayed name will be dialed.

NOTE:
- *In case phonebook contact have more than one number then audio will ask for particular number selection.*

Registration in speed dial
Follow the instructions below to assign a number to one of the Preset buttons to use as the speed dial.
1) Press the Bluetooth® setup button (4). The Bluetooth® setup menu will be displayed.
2) Turn the TUNE FOLDER, ♫ knob (1) to select "Setup Telephone", and press the knob (1) to determine the selection.
3) Turn the TUNE FOLDER, ♫ knob (1) to select "Setup Phonebook", and press the knob (1) to determine the selection.
4) Turn the TUNE FOLDER, ♫ knob (1) to select "Add Speed Dial", and press the knob (1) to determine the selection.
5) Turn the TUNE FOLDER, ♫ knob (1) to select the initial of a registered contact to be assigned, and press the knob (1) to determine the selection.
6) "Choose Preset" will be displayed. Press one of the Preset buttons (3) to which the selected number is to be assigned. "Registered" will be displayed.
7) If a number is already assigned to the selected button, a confirmation message will be displayed. Turn the TUNE FOLDER, ♫ knob (1) to select "Confirm", and press the knob (1) to complete the assignment. When the assignment is completed, the "Add Speed Dial" will be displayed.

NOTE:
- *When selecting "Go Back" option or ⮌ button, the previous menu will be displayed.*
- *In case phonebook contact have more than one number then audio will ask for particular number selection.*

One-touch call (Speed dial)
Follow the instructions below to dial the number assigned to each of the Preset buttons (3).
1) Press the Off Hook button (5).
   The Bluetooth® phonebook menu will be displayed.
2) Turn the TUNE FOLDER, ♫ knob (1) to select "Speed Dials", and press the knob (1) to determine the selection.
3) Press one of the Preset buttons (3).
   When no number is assigned, "No Entry" is displayed.
4) Press the knob (1) "DIAL" will be displayed. Press the knob (1) to determine the selection.

Deletion of speed dial (Del Speed Dial)
To delete a number assigned for the speed dial, follow the instructions below.
1) Press the Off Hook button (5).
   The Bluetooth® phonebook menu will be displayed.
2) Turn the TUNE FOLDER, ♫ knob (1) to select "Speed Dials", and press the knob (1) to determine the selection.
3) Press one of the Preset buttons (3) to which the number to be deleted is assigned.
   "No Entry" appears if the number is not registered.
4) Turn the TUNE FOLDER, ♫ knob (1) to select "Delete", and press the knob (1) to determine the selection.
5) Select "Del Speed Dial", and press the knob (1) to determine the selection.
6) Select "Confirm", and press the knob (1) to complete the deletion.

NOTE:
When selecting "Go Back" option or ⮌ button, the previous menu will be displayed

Dialing using Missed/Incoming/ Outgoing Calls
Follow the instructions below to dial to the last dialed number again.

NOTE:
Up to 10 phone numbers of the latest calls can be stored. (10 each for dialed, received and missed call)

1) Press the Off Hook button (5).
   The Bluetooth® phonebook menu will be displayed.
2) Turn the TUNE FOLDER, ♫ knob (1) to select "Outgoing Calls", "Incoming Calls" or "Missed Calls", and press the knob (1) to determine the selection.
   To dial from the dialed history or the received history, select "Outgoing Calls", "Incoming Calls" or "Missed Calls" respectively.
3) Turn the TUNE FOLDER, ♫ knob (1) to select the desired number or registered name and press the knob (1) to determine the selection.
4) Press the knob (1) to dial to the selected number.

NOTE:
- *When selecting "Go Back" option or ⮌ button, the previous menu will be displayed.*
- *Pressing "Choose Preset" after selecting "Add Speed Dial" can register the selected number in the speed dial.*
- *Pressing "Confirm" after selecting "Delete" can delete the selected number from the call history.*

Deletion of call history
Follow the instructions below to delete a missed/incoming/outgoing call history.
1) Press the Bluetooth® setup button (4). Turn the TUNE FOLDER, ♫ knob (1). Select "Setup telephone" and press the knob (1) to determine the selection.
2) Turn the TUNE FOLDER, ♫ knob (1) to select "Setup Phonebook", and press the knob (1) to determine the selection.
3) Turn the TUNE FOLDER, ♫ knob (1) to select "Delete History", and press the knob (1) to determine the selection.
4) Turn the TUNE FOLDER, ♫ knob (1) to select "Outgoing Calls", "Incoming Calls", "Missed Calls" or "ALL Calls", and press the knob (1) to determine the selection.
5) Turn the TUNE FOLDER, ♫ knob (1) to select a number to be deleted or "ALL Calls", and press the knob (1) to determine the selection.
6) Select "Delete?" or "Delete All?", in case of "ALL" will be selected and press the knob (1) to determine the selection.
7) Turn the TUNE FOLDER, ♫ knob (1) to select "Confirm", and press the knob (1) to complete the deletion.

NOTE:
When selecting "Go Back" option or ⮌ button, the previous menu will be displayed.

Deletion of registered data (Delete Entry)
Follow the instructions below to delete a number registered in Phonebook.
1) Press the Bluetooth® setup button (4). The Bluetooth® setup menu will be displayed.
2) Turn the TUNE FOLDER, ♫ knob (1) to select "Setup Telephone", and press the knob (1) to determine the selection.
3) Turn the TUNE FOLDER, ♫ knob (1) to select "Setup Phonebook", and press the knob (1) to determine the selection.
4) Turn the TUNE FOLDER, ♫ knob (1) to select "Delete Contacts", and press the knob (1) to determine the selection.
5) Turn the TUNE FOLDER, ♫ knob (1) to select the initial of the name of the registered number to be deleted or "ALL" and press the knob (1) to determine the selection.
6) Select "Delete?" or "Delete All?", and press the knob (1) to determine the selection.
7) Turn the TUNE FOLDER, ♫ knob (1) to select "Confirm", and press the knob (1) to complete the deletion.

NOTE:
When selecting "Go Back" option or ⮌ button, the previous menu will be displayed.

Display of device data (Device Name)
Follow the instructions below to display the BD (Bluetooth® Device) address and device name.
1) Press the Bluetooth® setup button (4). The Bluetooth® setup menu will be displayed.
2) Turn the TUNE FOLDER, ♫ knob (1) to select "Setup Bluetooth", and press the knob (1) to determine the selection.
3) Turn the TUNE FOLDER, ♫ knob (1) to select "Bluetooth Info", and press the knob (1) to determine the selection.
4) Select "Device Name" or "Device Address", and press the knob (1) to display the device name or the BD (Bluetooth® Device) address.

NOTE:
When selecting "Go Back" option or ⮌ button, the previous menu will be displayed.

Reset to the factory defaults
Follow the instructions below to reset all the settings to the factory defaults.
1) Press the Bluetooth® setup button (4). The Bluetooth® setup menu will be displayed.
2) Turn the TUNE FOLDER, ♫ knob (1) to select “Setup Bluetooth”, and press the knob (1) to determine the selection.
3) Turn the TUNE FOLDER, ♫ knob (1) to select “Initialize”, and press the knob (1) to determine the selection.
4) Turn the TUNE FOLDER, ♫ knob (1) to select “All Initialize”, and press the knob (1) to determine the selection.
5) Turn the TUNE FOLDER, ♫ knob (1) to select “Confirm”, and press the knob (1) to start the reset “initialized” will be displayed.

NOTE:
When selecting “Go Back” option or ⮌ button, the previous menu will be displayed.

Selection of phone (Select Phone)
Follow the instructions below to select a phone to be paired with from the registered phones.
1) Press the Bluetooth® setup button (4). The Bluetooth® setup menu will be displayed.
2) Turn the TUNE FOLDER, ♫ knob (1) to select “Setup Bluetooth”, and press the knob (1) to determine the selection.
3) Turn the TUNE FOLDER, ♫ knob (1) to select “List Phone”, and press the knob (1) to determine the selection.
4) Turn the TUNE FOLDER, ♫ knob (1) to select a phone to be paired with, and press the knob (1) to determine the selection.
5) Turn the TUNE FOLDER, ♫ knob (1) to select “Select”, and press the knob (1) to determine the selection.

NOTE:
- *When selecting “Go Back” option or ⮌ button, the previous menu will be displayed.*
- *The Bluetooth® ready audio device will be disconnected when the phone is selected.*

List of phones (List Phones)
Follow the instructions below to display the names of the registered phones in sequence.
1) Press the Bluetooth® setup button (4). The Bluetooth® setup menu will be displayed.
2) Turn the TUNE FOLDER, ♫ knob (1) to select “Setup Bluetooth”, and press the knob (1) to determine the selection.
3) Turn the TUNE FOLDER, ♫ knob (1) to select “List Phone”, and press the knob (1) to determine the selection.
   The names of the registered phones are displayed.

NOTE:
When selecting “Go Back” option or ⮌ button, the previous menu will be displayed.

Passkey setting (Set Passkey)
Follow the instructions below to set the security number (Passkey).
1) Press the Bluetooth® setup button (4). The Bluetooth® setup menu will be displayed.
2) Turn the TUNE FOLDER, ♫ knob (1) to select “Setup Bluetooth”, and press the knob (1) to determine the selection.
3) Turn the TUNE FOLDER, ♫ knob (1) to select “Passkey”, and press the knob (1) to determine the selection.
4) Select “New Passkey”, and press the knob (1) to determine the selection.
5) Press the TUNE FOLDER, ♫ knob (1) to select “Confirm”.
6) Turn the TUNE FOLDER, ♫ knob (1) to select a number for the first digit, and press the knob (1) to determine the selection. Select and determine numbers for the second, third and fourth digits in order in the same manner.
7) After entering fourth digit, press knob (1) to confirm. Passkey “XXXX” will be displayed.

NOTE:
When selecting “Go Back” option or ⮌ button, the previous menu will be displayed.

Deletion of phone information (Delete Phone)
Follow the instructions below to delete the registered information of the phone.
1) Press the Bluetooth® setup button (4). The Bluetooth® setup menu will be displayed.
2) Turn the TUNE FOLDER, ♫ knob (1) to select “Setup Bluetooth”, and press the knob (1) to determine the selection.
3) Turn the TUNE FOLDER, ♫ knob (1) to select “List Phone”, and press the knob (1) to determine the selection.
4) Turn the TUNE FOLDER, ♫ knob (1) to select a phone to be deleted, and press the knob (1) to determine the selection.
5) Turn the TUNE FOLDER, ♫ knob (1) to select “Delete”, and press the knob (1) to determine the selection.
6) Select “Delete?”, and press the knob (1) to determine the selection.
7) Turn the TUNE FOLDER, ♫ knob (1) to select “Confirm”, and press the knob (1) to determine the selection.

NOTE:
When selecting “Go Back” option or ⮌ button, the previous menu will be displayed.

BT function on/off (BT Power)
Follow the instructions below to turn on/off the Bluetooth® function.
1) Press the Bluetooth® setup button (4). The Bluetooth® setup menu will be displayed.
2) Turn the TUNE FOLDER, ♫ knob (1) to select “Setup Bluetooth”, and press the knob (1) to determine the selection.
3) Turn the TUNE FOLDER, ♫ knob (1) to select “BT Power”, and press the knob (1) to determine the selection.
4) Press the TUNE FOLDER, ♫ knob (1) to select “BT Power On” or “BT Power Off”.

NOTE:
- *When the BT function is turned off, the connection between this unit and the registered phone in use will be disconnected.*
- *When selecting “Go Back” option or ⮌ button, the previous menu will be displayed.*

Bluetooth® audio (if equipped)

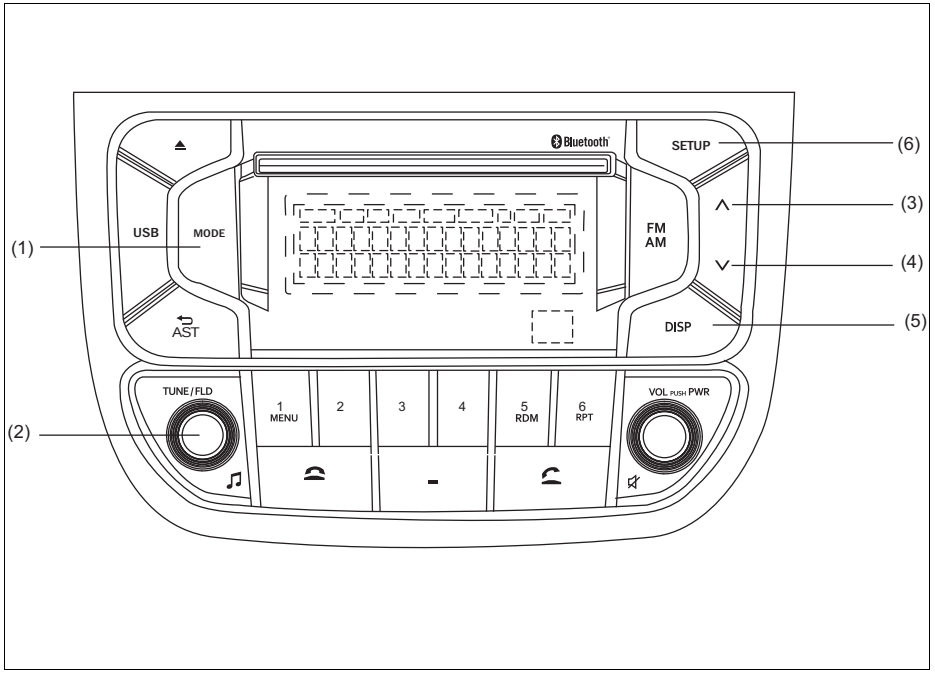

82PH05031

NOTE:
Applicable for Bluetooth® audio version 2.1 + EDR

Steering switch (If equipped)

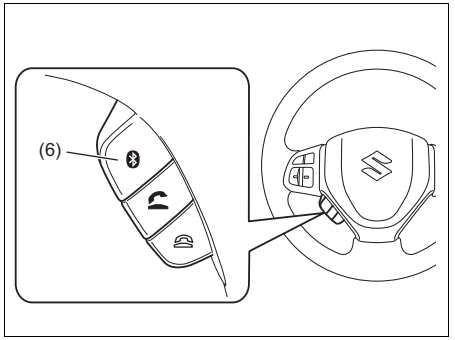

Display

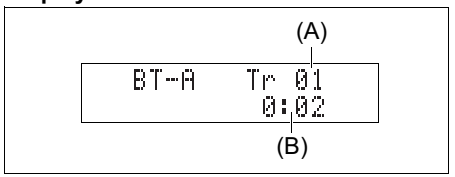

(1) MODE button
(2) TUNE FOLDER, ♫ knob
(3) Up button
(4) Down button
(5) DISP button
(6) Bluetooth® setup button

(A) Track number
(B) Play time

Registration of audio devices
To use Bluetooth® ready audio devices with this unit, it is required to register the devices.

NOTE:
- *To set up a new audio player, disconnect the phone from the unit. Connect the phone after audio player setup is completed if necessary.*
- *When failed to establish the connection within 60 seconds, the connecting operation will be canceled. Please try again or refer to the audio player manual for assistance with the pairing process.*

1) Press the Bluetooth® setup button (6). The Bluetooth® setup menu will be displayed.
2) Turn the TUNE FOLDER, ♫ knob (2) to select “Setup Bluetooth”, and press the knob (2) to determine the selection.
3) Turn the TUNE FOLDER, ♫ knob (2) to select “Pairing”, and press the knob (2) to determine the selection.
4) Select “Maruti Suzuki” from the Bluetooth® menu of the audio player and establish the pairing.
   Refer to the manual of the audio player in use for further information.
5) Enter the Passkey displayed on the unit to the audio player. (For phones with Bluetooth version 2.1 or above passkey input is not required.

NOTE:
- *When selecting “Go Back” option or ⮌ button, the previous menu will be displayed.*
- *When additionally registering audio devices, operate the same step from 1).*

Selecting the Bluetooth® audio mode
Press the MODE button (1).
Each time the button is pressed, the mode will change as follows:

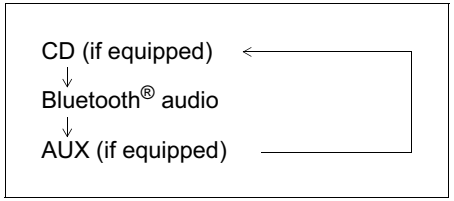

Selecting a track
- *Press the Up button (3) to listen to the next track.*
- *Press the Down button (4) twice to listen to the previous track.*
  When the Down button (4) is pressed once, the track currently being played will start from the beginning again.

Fast forwarding/Rewinding a track
- Hold down the Up button (3) to fast forward the track.
- Hold down the Down button (4) to fast rewind the track.

NOTE:
Some functions may not be available depending on Bluetooth® audio.

Display change
Press the DISP button (5).
Each time the button is pressed, display will change as follows:

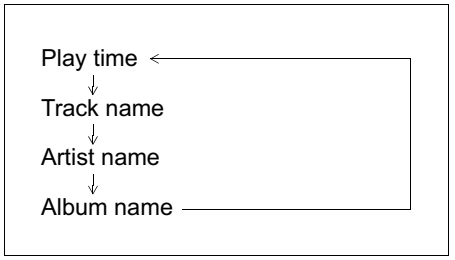

NOTE:
If text data contains more than 15 characters, the “>” mark will appear at the right end. Audio displays text information three times automatically. Later holding down the DISP button (5) for 1 second or longer can display the next page for one time only.

Disclaimer for Bluetooth® function

- Depending on the mobile phone models, some phones may not be compatible fully or partially (some function may be restricted).
- Connectivity or voice quality may get affected depending on circumstances.
- After the ignition switch is turned to the “ON” position the audio system takes few seconds to detect and connect to the Bluetooth® device (if already paired).
- Make sure that you are aware of all applicable local laws and accordingly use Bluetooth device.

Remote Audio Controls (if equipped)

Controlling of basic functions of the audio system is available using the switches on the steering wheel.

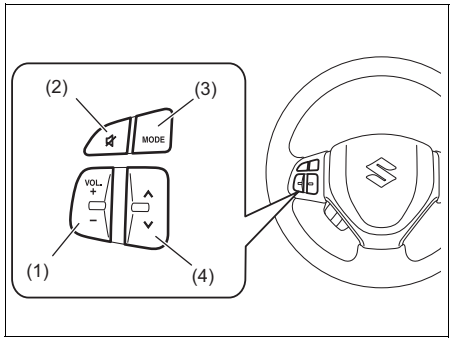

Adjusting the volume

- To increase the volume, hold down “+” of the VOL switch (1). The volume will keep on being increased until the switch is released.
- To decrease the volume, hold down “-” of the VOL switch (1). The volume will keep on being decreased until the switch is released.
- To mute the sound, press the switch (2).

Selecting the mode

Press the switch (3).
Each time the button is pressed, the mode will change as follows:

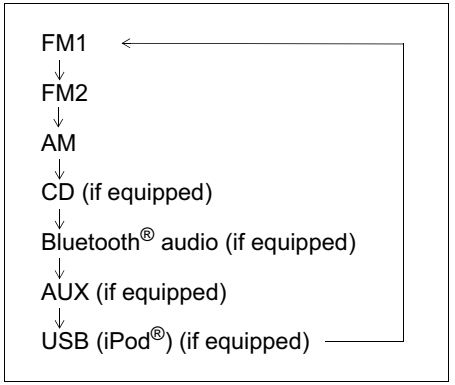

It is possible to turn on the audio system by pressing the switch (3).

Selecting the radio station (FM1, FM2, AM mode)
- To select the next preset station, press "∧" of the switch (4) only for a moment.
- To select the previous preset station, press "∨" of the switch (4) only for a moment.
- To scan a higher frequency radio station, press "∧" of the switch (4) for 1 second or longer.
- To scan a lower frequency radio station, press "∨" of the switch (4) for 1 second or longer.

Selecting the track (CD, USB (iPod®), Bluetooth® audio mode)
- To skip to the next track, press "∧" of the switch (4) only for a moment.
- To skip to the previous track, press "∨" of the switch (4) twice only for a moment. When the switch (4) is pushed down once only for a moment, the track currently being played will start from the beginning again.

Fast forwarding/Rewinding a track
- To fast forward, press "∧" of the switch (4) for 1 second or longer.
- To fast rewind, press "∨" of the switch (4) for 1 second or longer.

Anti-Theft Feature

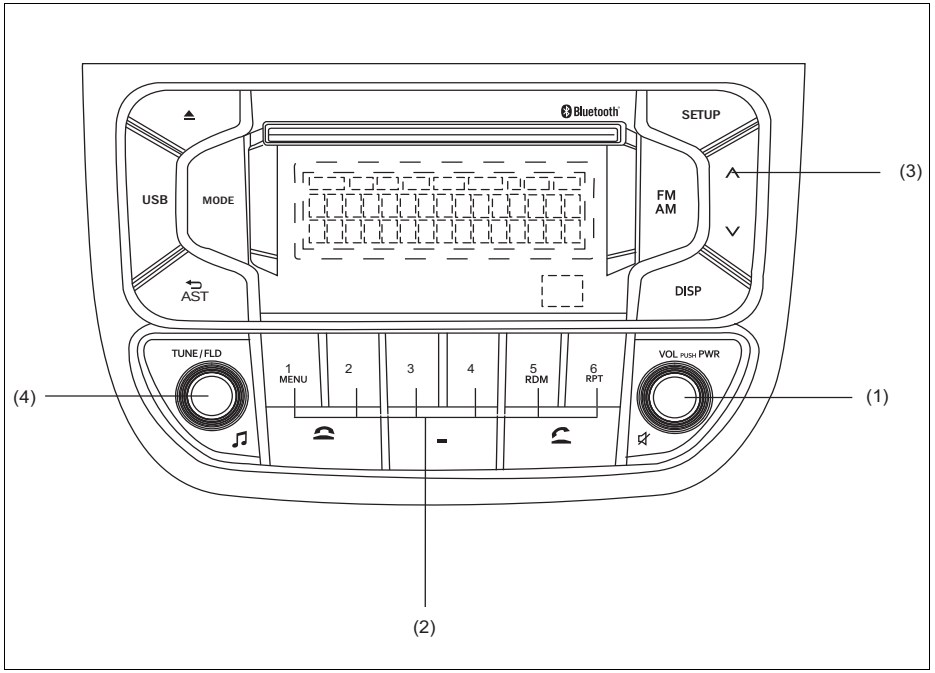

82PH05032

(1) VOL PUSH POWER, knob
(2) Preset buttons ([1] to [6])
(3) Up button
(4) TUNE FOLDER, knob

The anti-theft function is intended to discourage thefts, such as that the audio system becomes inoperable when it is installed on other vehicles.
This function works by entering a Personal Identification Number (PIN).
When the unit is disconnected from its power source, such as when the audio system is removed or the battery is disconnected, the unit will become inoperable until the PIN is reentered.

Setting the Anti-Theft Function
1) Long press the VOL PUSH POWER, knob (1) to power off.
2) Hold down the buttons numbered [1] and [6] of the Preset buttons (2) simultaneously, “SECURITY” will be displayed.
3) Press the Up button (3) and the button numbered [1] of the Preset buttons (2) simultaneously.
4) Enter a 4-digit number to be registered as PIN using the buttons numbered [1] - [4] of the Preset buttons (2).
5) Hold down the TUNE FOLDER, knob (4) for 1 second or longer to set the anti-theft function. “Complete” will be displayed”.

NOTE:
Take a note of the registered PIN and keep it for the future use.

Canceling the anti-theft feature
To cancel the anti-theft function, delete the registered PIN.
1) Long press the VOL PUSH POWER, knob (1) to power off.
2) Hold down the buttons numbered [1] and [6] of the Preset buttons (2) simultaneously, “PIN ENTRY” will be displayed.
3) Press the Up button (3) and the button numbered [1] of the Preset buttons (2) simultaneously.
4) Enter a 4-digit number to be registered as PIN using the buttons numbered [1] - [4] of the Preset buttons (2).
5) Hold down the TUNE FOLDER, knob (4) for 1 second or longer to delete the registered PIN. The indication “----” will be displayed and the anti-theft function will be canceled.

NOTE:
To change your PIN, first delete your current PIN, then set a new one.

Confirming the Personal Identification Number (PIN)
When the main power source is disconnected such as when the battery is replaced, etc, it is required to enter the PIN to make the unit operable again.
1) Set the ignition switch to the “ACC” position.
   “SECURITY” will be displayed.
2) Press the Up button (3) and the button numbered [1] of the Preset buttons (2) simultaneously.
3) Enter a 4-digit number to be registered as PIN using the buttons numbered [1] - [4] of the Preset buttons (2).
4) Hold down TUNE FOLDER, knob (4) for 1 second or longer.
   When the PIN same as registered is entered, the power of the audio system will be turned off automatically and it will become operable again.

NOTE:
If an incorrect PIN is entered, “ERROR” and the total number of incorrect entry attempts will be displayed.
If an incorrect PIN is entered 10 times, “HELP” will be displayed and the audio system will become inoperable.

Battery Installation

Install a lithium battery (CR2025) with the poles facing the correct direction.

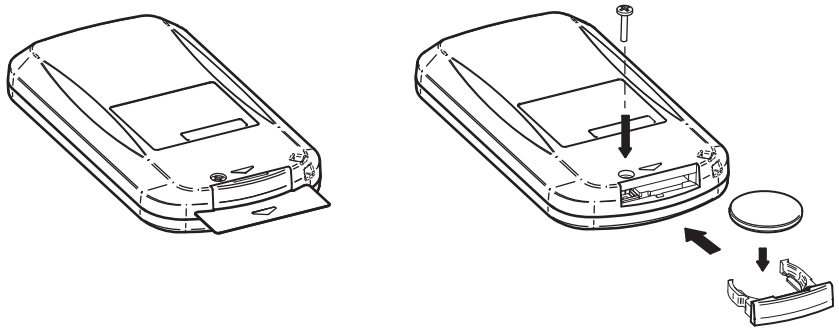

Battery replacement timing
- When battery power is depleted, the button may not be operable. If the remote controller does not operate, replace the battery and check the operation.

Caution on battery
- Be sure to follow the instructions to prevent battery leakage, over-heating, ignition or explosion.

⚠ WARNING

- **Do not expose the battery to flame. Do not short circuit, disassemble, or heat the battery.**
- **Do not charge the battery.**
- **Use the specified type battery.**
- **Keep the button-shaped battery away from children to prevent accidental swallowing.**
- **If the battery is swallowed, contact a doctor immediately.**

⚠ CAUTION

- **Install the battery with the poles facing the correct direction.**
- **When not in use for a long period of time, or if the battery is dead, remove the battery from the remote controller.**

If battery leakage has occurred, wipe the container first then install a new battery. If the battery solution contacts the skin, wash off with water completely.

Caution on Remote Controller
- Do not leave the remote controller in an area exposed to direct sunlight, such as on the dashboard or steering wheel. The remote controller may deform because of the heat, (Be especially careful of the dashboard exposed to direct sunlight in the summer, as it will become extremely hot).

- When the vehicle is parked in an area exposed to direct sunlight, Ensure the remote controller is placed in an area not exposed to direct sunlight. For example: Glove box.
  Under direct sunlight, signal reception from the remote controller weakens. If this happens, hold the remote controller close to the signal receptor on the front panel.

Remote Controller

Common operations

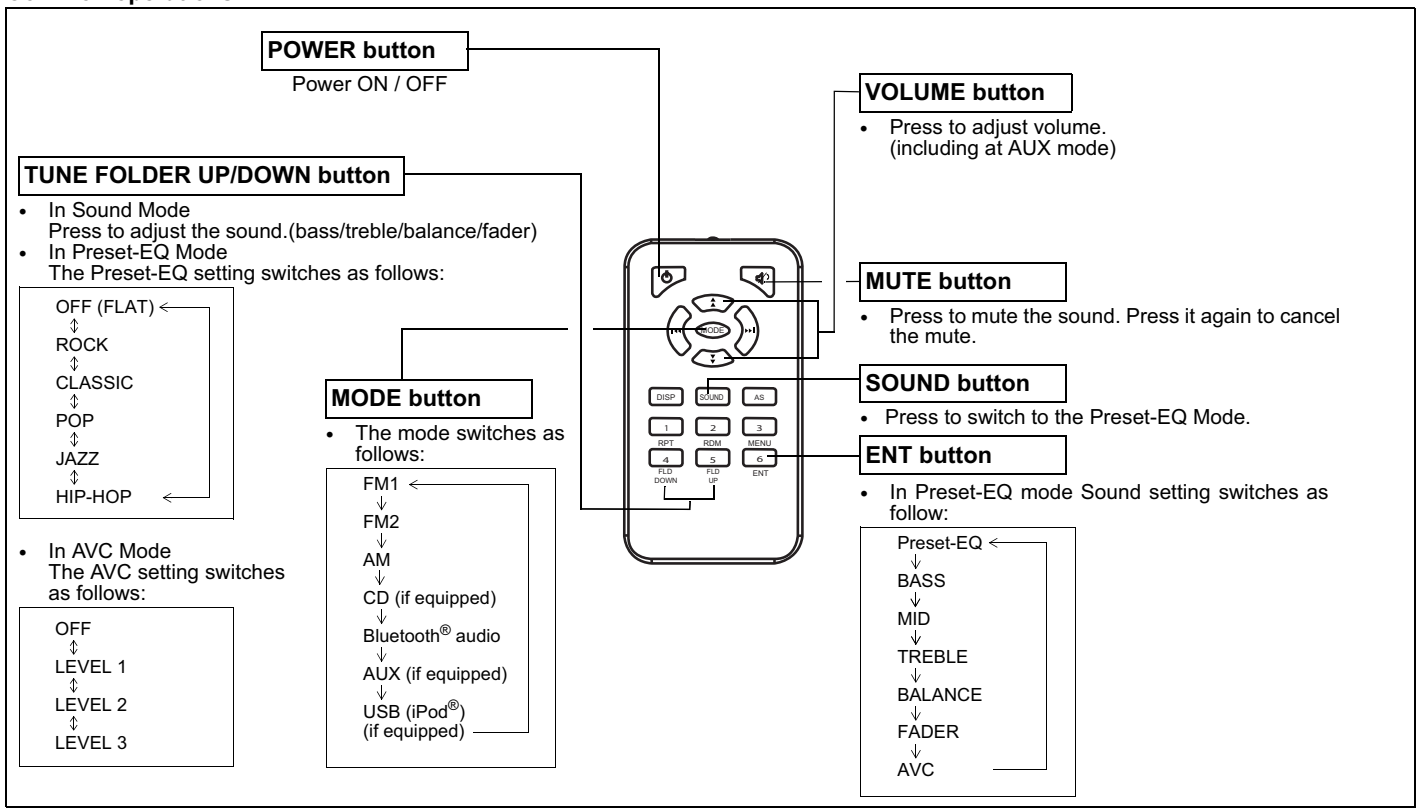

Radio operations

SEEK TRACK UP/DOWN button

- Press to select the radio station.

AS button

- Press to return to the last received frequency in the previous auto store mode.
- Press it for 2 seconds or longer. It selects the stations with the stronger signals and stores them in order.

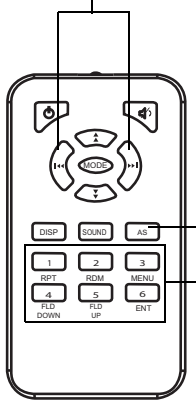

PRESET buttons (1-6)

- Press to select the desired preset station.

NOTE:
When there are fewer than 6 stations that can be stored even if 1 round of auto store operation is performed, no station will be stored at the remaining preset buttons.

CD operations

DISP button

- The display switches as follows:

Play time ← ↓ Disc title ↓ Track title

- Press it for 1 second or longer to display the next page.

RPT (1) button

- Press to plays the current track repeatedly. Press it again to cancel.

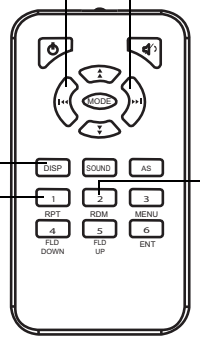

SEEK TRACK UP/DOWN button

- Press to skip to the next/previous track.
- Press it for 1 second or longer to fast-forward/ fast-rewind the track.

RDM (2) button

- Press to play the current track randomly. Press it again to cancel.

MP3/WMA Disc operations

DISP button

- The display switches as follows:

Play time
↓
Folder name
↓
File name
↓
Album name (MP3, WMA only)
↓
Track title
↓
Artist name

- Press it for 1 second or longer to display the next page.

SEEK TRACK UP/DOWN button

- Press to skip to the next/previous track.
- Press it for 1 second or longer to fast-forward/fast-rewind the track.

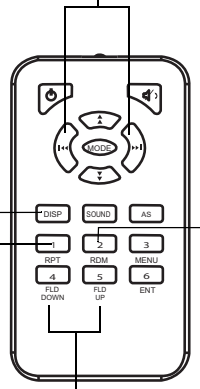

RPT (1) button

The repeat mode switches as follows:

OFF
↓
FILE FOLDER
↓
FOLDER REPEAT

RDM (2) button

The random mode switches as follows:

OFF
↓
FOLDER RANDOM
↓
ALL RANDOM

TUNE FOLDER UP/DOWN button

- Press to skip to the next/previous folder.

USB operations

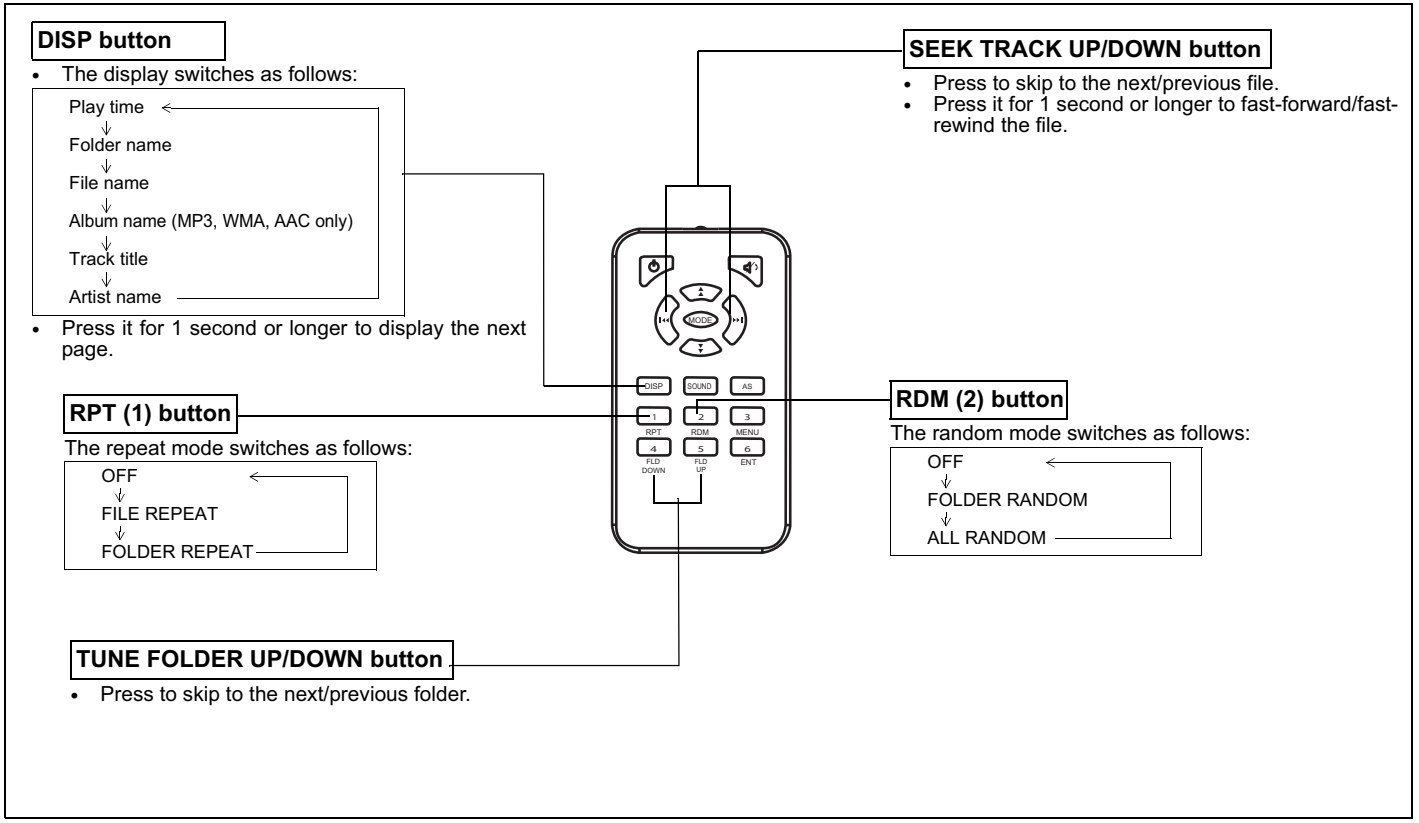

iPod operations

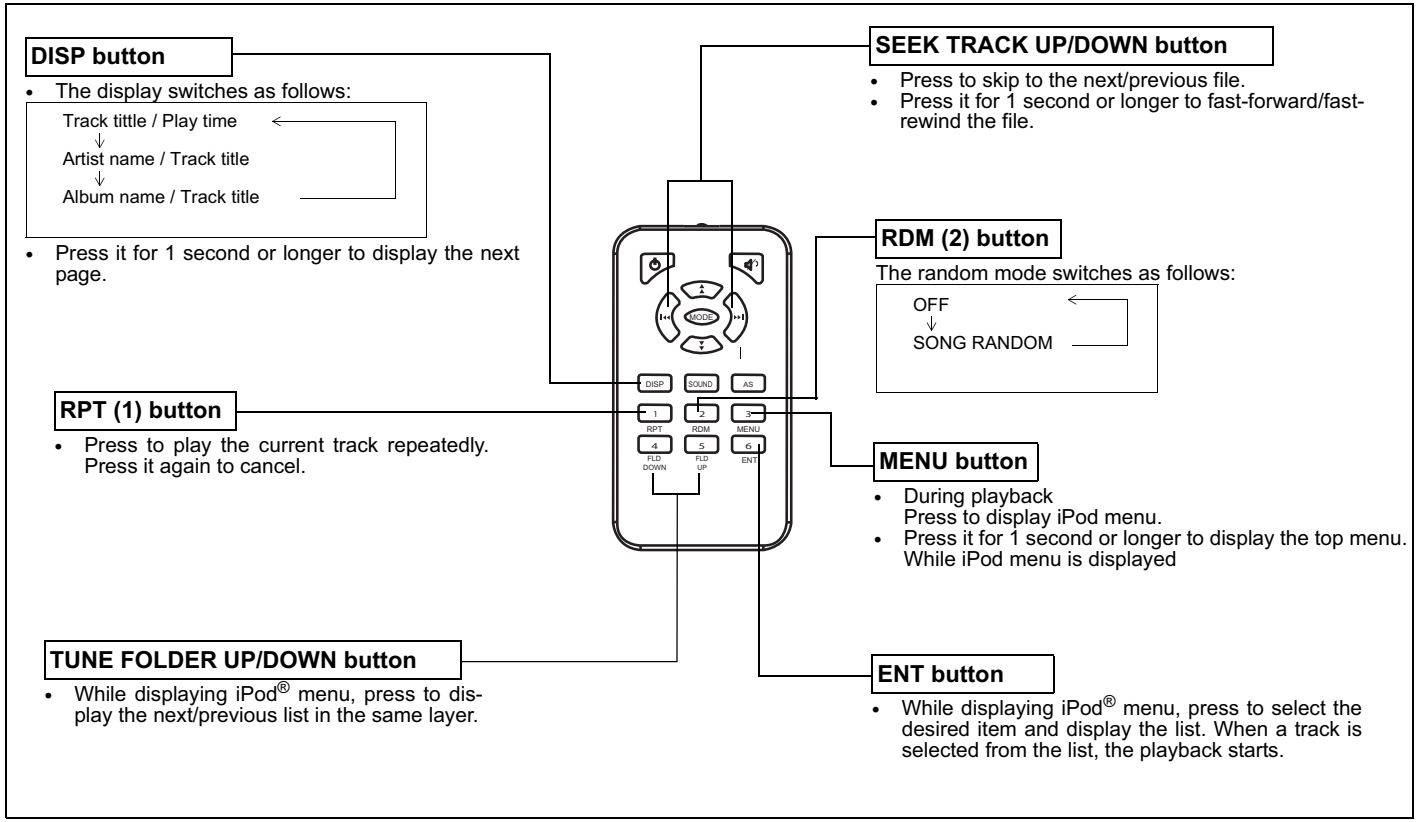

Troubleshooting

When encountered a problem, check and follow the instructions as described below.
If the described suggestions do not solve the problem, it is recommended to take the unit to your authorised MARUTI SUZUKI workshop.

Problem	Possible cause	Possible solution
Common		
Unable to operate	The security function is on.	When “SECURITY” is displayed, enter the ID. When “HELP” is displayed, contact your authorised MARUTI SUZUKI workshop.
Unable to turn on the power (no sound). (No sound is produced)	Fuse is blown.	Contact your authorized MARUTI SUZUKI workshop.
Radio		
High noise	It may not be exactly tuned in to the station.	Tune it in exactly to the station.
Unable to receive by auto tuning	There may be no station emitting signals powerful enough.	Pick up a station by manual tuning.
CD		
Sound skips or noise produced	The disc is dirty.	Wipe the disc with a soft cloth.
	The disc has a major scratch or is warped.	Replace the disc with the one with no scratch and also not warped.

Problem	Possible cause	Possible solution
MP3/WMA/AAC		
No playback	The disc contains unsupported formatted data.	Check the file format.
Sound skips or noise produced	Sound skipping may occur when playing VBR (Variable Bit Rate) files.	It is not recommended to play VBR files.
USB		
Playback does not start when the USB device is connected.	There is no supported format file to play on this unit.	Check the file format.
	The current consumption of the USB device exceeds 1.0 A.	Use an USB device with a current consumption lower than 1.0 A.
Bluetooth®		
Pairing failed	The distance between this unit and the Bluetooth® ready device is too far, or a metallic object may be located between the Bluetooth® ready device and this unit.	Change the location of the Bluetooth® ready device.
	The Bluetooth® function of the Bluetooth® ready device is off.	Refer to the manual of the Bluetooth® ready device. (Some devices have the power saving function that automatically activates after a certain time.)
Unable to receive a call.	Your current location may be out of service area.	Drive your vehicle to the service area of the phone.
The voice quality of hands-free is low (Distortion, noise etc.).	Another wireless device may be located near the unit.	Switch off the wireless device or keep it away from the unit.

Error Display Messages

Display	Possible cause	Possible solution
CD		
ERROR 1	CD Error - Data Error & Mount Error (due to scratch) - Unsupported UDF - Open Session Disc	Check the CD
ERROR 2	CD Error - Load Fail - Eject Fail	When the CD is in the unit, press the CD eject button to remove the disc. When the disc cannot be ejected, Press the CD eject for 4-5 seconds
NO MUSIC	There is no playable file on CD	Check the CD
USB/iPod®		
ERROR 1	USB Mount Error - Unsupported File-System - Fail to read file - Fail to read folder	Check the connection of the USB device.
ERROR 2	USB device Error	Unplug the USB device and plug it again. Check the USB device.
ERROR 2 and random indicator "USB" is blinking	When MTP supported device (Smart phone) is connected via USB and if the device (Smart phone) is security locked.	Unlock the device (Smart phone)
NO MUSIC	There is no playable file on USB & I-pod	Check the USB device.

Display	Possible cause	Possible solution
Bluetooth®		
Connection Failed	Failed to establish pairing	Try to establish the pairing again.
NO MUSIC	There is no playable file on BT device	Check the BT device

VEHICLE LOADING AND TOWING

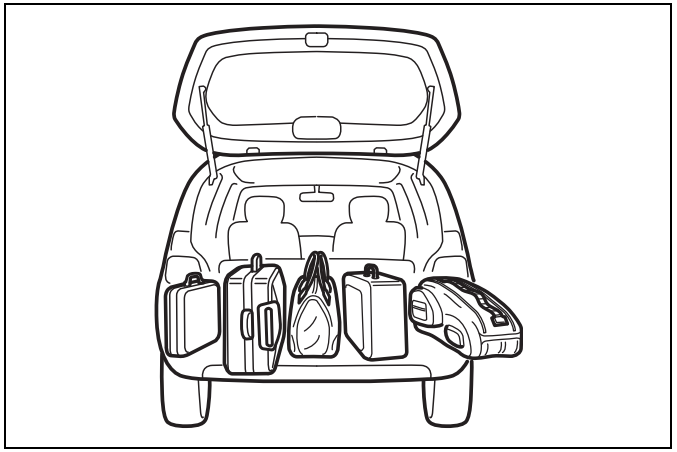

54G215

Vehicle Loading 6-1
Trailer Towing 6-1

Vehicle Loading

Your vehicle was designed for specific weight capacities. The weight capacities of your vehicle are indicated by the Gross Vehicle Weight Rating (GVWR) and the Permissible maximum Axle Weight (PAW, front and rear). The GVWR and PAW (front and rear) are listed in the “SPECIFICATIONS” section.

GVWR – Maximum permissible overall weight of the fully loaded vehicle (including all the occupants, accessories and cargo plus the trailer nose weight if towing a trailer).
PAW – (Front and Rear) Maximum permissible weight on an individual axle.

Actual weight of the loaded vehicle and actual loads at the front and rear axles can only be determined by weighing the vehicle. Compare these weights to the GVWR and PAW (front and rear). If the gross vehicle weight or the load on either axle exceeds these ratings, you must remove enough weight to bring the load down to the rated capacity.

⚠ WARNING

Never overload your vehicle. The gross vehicle weight (sum of the weights of the vehicle, all the occupants, accessories, cargo plus trailer nose weight if towing a trailer) must never exceed the Gross Vehicle Weight Rating (GVWR). In addition, never distribute a load so that the weight on either the front or rear axle exceeds the Permissible maximum Axle Weight (PAW).

⚠ WARNING

Always distribute cargo evenly. To avoid personal injury or damage to your vehicle, always secure cargo to prevent it from shifting if the vehicle moves suddenly. Place heavier objects on the floor and as far forward in the cargo area as possible. Never pile cargo higher than the top of the seat backs.

Trailer Towing

Your vehicle was originally designed to carry people and a normal amount of cargo, not to tow a trailer. MARUTI SUZUKI does not recommend that you use your vehicle to tow a trailer. Towing a trailer can adversely affect handling, durability, and fuel economy.

EXAMPLE

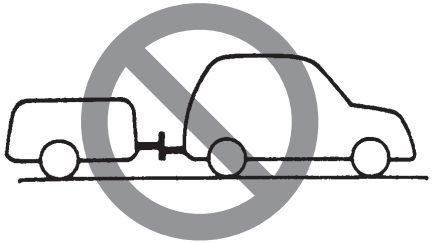

74LHM06001

INSPECTION AND MAINTENANCE

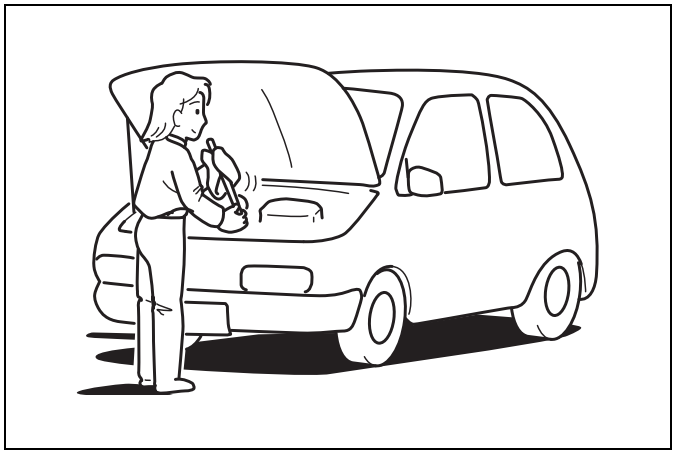

60G410

Maintenance Schedule 7-2
Periodic Maintenance Schedule 7-2
Drive Belt 7-6
Engine Oil and Filter 7-6
Engine Coolant 7-9
Air Cleaner 7-11
Gear Oil 7-11
Clutch Pedal 7-12
Fuel Filter 7-12
Brakes 7-13
Steering 7-15
Tires 7-15
Battery 7-18
Fuses 7-19
Headlight Aiming..... 7-22
Bulb Replacement 7-22
Wiper Blades 7-30
Windshield Washer Fluid 7-32
Air Conditioning System 7-33

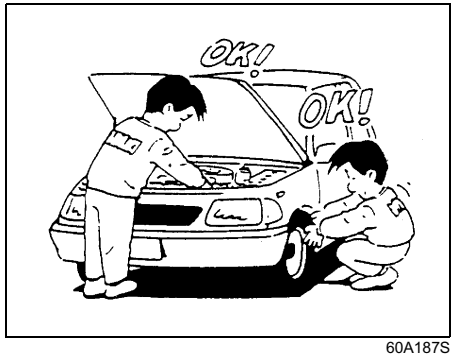

60A187S

⚠ WARNING

You should take extreme care when working on your vehicle to prevent accidental injury. Here are a few precautions that you should be especially careful to observe:

(Continued)

⚠ WARNING

(Continued)

- **To prevent damage or unintended activation of the air bag system or seat belt pretensioner system, be sure the battery is disconnected and the ignition switch has been in the "LOCK" position or the ignition mode has been LOCK (OFF) for at least 90 seconds before performing any electrical service work on your MARUTI SUZUKI. Do not touch air bag system components, seat belt pretensioner system components or wires.**
  The wires are wrapped with yellow tape or yellow tubing, and the couplers are yellow for easy identification.
- **Do not leave the engine running in garages or other confined areas.**
- **When the engine is running, keep hands, clothing, tools, and other objects away from the fan and drive belt. Even though the fan may not be moving, it can automatically turn on without warning.**

(Continued)

⚠ WARNING

(Continued)

- **When it is necessary to do service work with the engine running, make sure that the parking brake is set fully and the transaxle is in Neutral.**
- **Do not touch ignition wires or other ignition system parts when starting the engine or when the engine is running, or you could receive an electric shock.**
- **Be careful not to touch a hot engine, exhaust manifold and pipes, muffler, radiator and water hoses.**
- **Do not allow smoking, sparks, or flames around fuel or the battery. Flammable fumes are present.**
- **Do not get under your vehicle if it is supported only with the portable jack provided in your vehicle.**
- **Be careful not to cause accidental short circuits between the positive and negative battery terminals.**
- **Keep used oil, coolant, and other fluids away from children and pets. Dispose of used fluids properly; never pour them on the ground, into sewers, etc.**

Maintenance Schedule

The following table shows the times when you should perform regular maintenance on your vehicle. This table shows in kilometers and months when you should perform inspections, adjustments, lubrication and other services.

⚠ WARNING

MARUTI SUZUKI recommends that maintenance on your vehicle should be performed by authorised Maruti Suzuki workshop Service station.

NOTICE

Whenever it becomes necessary to replace parts on your vehicle, it is recommended that you use MARUTI genuine replacement parts or their equivalent.

Periodic Maintenance Schedule

"A" :Adjust
"C": Clean
"R": Replace or Change
"I": Inspect, clean, adjust, lubricate or replace as necessary
"L": Lubricate
"T": Tighten to Specified Torque
"O": Rotate

NOTE:
This table includes services as scheduled up to 80,000 km mileage. Beyond 80,000 km, carry out the same services at the same intervals respectively.

Interval: This interval should be judged by odometer reading or months, whichever comes first.			FREE INSPECTION			PERIODIC MAINTENANCE AT COST						
		km (x1000)	1	5	10	20	30	40	50	60	70	80
		months	1	6	12	24	36	48	60	72	84	96
ENGINE												
1-1	Engine Coolant (Level, Leakage)		I	I	I	R	I	R	I	R	I	R
1-2	Engine oil, engine oil filter and drain plug gasket.		–	–	R	R	R	R	R	R	R	R
1-3	Cooling system hoses and connections (Leakage and Damage)		I	I	I	I	I	I	I	I	I	I
1-4	Engine mounting and manifold fixing (Loose, Damage)		–	–	I	–	I	–	I	–	I	–
1-5	Exhaust System (Noise, Leakage etc.)		–	I	–	I	–	I	–	I	–	I
1-6	Exhaust Gas Recirculation Valve		–	–	–	–	C	–	–	C	–	–
FUEL												
2-1.	Air cleaner filter element	Paved-road	Clean after 10,000 KM. Replace after every 40,000 KM.									
		Dusty Condition	Clean after 2,500 KM or as required. Replace after every 40,000 KM. Replace more frequently if dust condition is severe.									
2-2.	Fuel tank cap, fuel lines and connections (Leakage and Damage)		–	I	–	–	–	I	–	–	–	I
2-3.	Fuel Filter and Water Draining		I	I	I	R	I	R	I	R	I	R
CLUTCH AND TRANSMISSION												
3-1.	Clutch fluid (level, leakage)		I	I	I	R	I	R	I	R	I	R
3-2.	Clutch slipping (Dragging or Excess Damage)		I	I	I	I	I	I	I	I	I	I
3-3.	Manual Transmission Oil (Level, Leakage)		Replace at 1,60,000 km or 10 years whichever comes first									
			I	I	I	I	I	I	I	I	I	I
DRIVE SHAFT												
4-1.	Drive shaft boot (Boot damage)		–	I	I	I	I	I	I	I	I	I
BRAKE												
5-1.	Brake Fluid (Level, Leakage)		I	I	I	R	I	R	I	R	I	R
5-2.	Brake pedal (Pedal - floor carpet)		I	I	I	I	I	I	I	I	I	I
5-3.	Parking brake lever and cable (Play, damage)		I	I	I	I	I	I	I	I	I	I
5-4.	Brake disc and pad (Wear)		–	I	I	I	I	I	I	I	I	I

Interval: This interval should be judged by odometer reading or months, whichever comes first.			FREE INSPECTION			PERIODIC MAINTENANCE AT COST						
		km (x1000)	1	5	10	20	30	40	50	60	70	80
		months	1	6	12	24	36	48	60	72	84	96
5-5.	Brake drum and shoes (Wear)		–	–	I	I	I	I	I	I	I	I
5-6.	Master cylinder, wheel cylinder and caliper piston (Fluid leakage, boot/seal damage)		I	I	I	I	I	I	I	I	I	I
5-7.	Brake hoses and pipes (Fluid leakage, damage)		I	I	I	I	I	I	I	I	I	I
WHEEL												
6-1.	Tyres (air pressure, abnormal wear, crack and rotation)		I	I&O	I&O	I&O	I&O	I&O	I&O	I&O	I&O	I&O
6-2.	Wheels (Damage)		I	I	I	I	I	I	I	I	I	I
6-3.	Front/Rear wheel bearing (Loose, damage)		I	I	I	I	I	I	I	I	I	I
FRONT / REAR SUSPENSION												
7-1.	Suspension strut (Oil leakage, damage)		I	I	I	I	I	I	I	I	I	I
7-2.	Suspension arms / Knuckle support (Loose, damage)		–	I	I	I	I	I	I	I	I	I
7-3.	Rear spring (Damage)		I	I	I	I	I	I	I	I	I	I
7-4.	Shock absorbers (Oil leakage, damage)		I	I	I	I	I	I	I	I	I	I
7-5.	All bolts and nuts (Loose)		–	T	T	T	T	T	T	T	T	T
7-6.	Torsion rods		–	I	I	I	I	I	I	I	I	I
STEERING												
8-1.	Steering wheel (Play, loose)		I	I	I	I	I	I	I	I	I	I
8-2.	Steering column and tie rods (Loose, damage, wear)		I	I	I	I	I	I	I	I	I	I
ELECTRICAL												
9-1.	Battery electrolyte (Level, leakage)		I	I	I	I	I	I	I	I	I	I
9-2.	Wiring harness connection (Loose, damage)		–	I	I	I	I	I	I	I	I	I
9-3.	Lighting system (Operation, stains, damage)		I	I	I	I	I	I	I	I	I	I
9-4.	Horn (Operation)		I	I	I	I	I	I	I	I	I	I
9-5.	System Voltage		–	I	I	I	I	I	I	I	I	I
BODY												
10-1.	All chassis bolts and nuts (Tighten)		–	I	T	T	T	T	T	T	T	T
10-2.	All latches, hinges and locks (Function)		I	I&L	I&L	I&L	I&L	I&L	I&L	I&L	I&L	I&L

Interval: This interval should be judged by odometer reading or months, whichever comes first.			FREE INSPECTION			PERIODIC MAINTENANCE AT COST						
		km (x1000)	1	5	10	20	30	40	50	60	70	80
		months	1	6	12	24	36	48	60	72	84	96
ROAD TEST												
11-1.	Operation of Brakes, gear shifting and speedometer		I	I	I	I	I	I	I	I	I	I
11-2.	Body and chassis noise		I	I	I	I	I	I	I	I	I	I
AIR CONDITIONER												
12-1.	Check belt tension		I	I	I	I	I	I	I	I	I	I
12-2.	Tighten compressor mounting bolt		–	T	T	T	T	T	T	T	T	T
12-3.	All hose joint (Check, tighten)		I	I	I	I	I	I	I	I	I	I
12-4.	Check functioning of Recirculating flap		I	I	I	I	I	I	I	I	I	I
12-5.	Clean condenser with low pressure water		–	C	C	C	C	C	C	C	C	C
12-6.	Check belt for frayed edges		I	I	I	I	I	I	I	I	I	I
12-7.	Check all mounting bolts		I	I	I	I	I	I	I	I	I	I
12-8.	Air conditioner filter element		I	I	I	I	R	I	I	R	I	I

Drive Belt

⚠ WARNING

When the engine is running, keep hands, hair, clothing, tools, etc. away from the moving fan and drive belts.

Make sure the drive belt tension is correct. If the belt is too loose, insufficient battery charging, engine overheating, poor power steering, poor air conditioning, or excessive belt wear can result. When you press the belt with your thumb midway between the pulleys, there should be a deflection according to the following chart.

The belts should also be examined to ensure that they are not damaged.

If you need to replace or adjust the belt have it done by your authorised Maruti Suzuki workshop.

For Diesel Engine Model

The drive belts tension adjusted automatically.

Engine Oil and Filter

Specified Oil

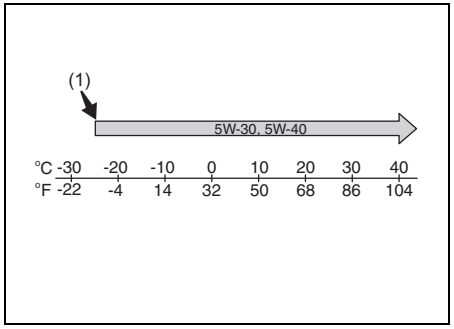

79MH0760

(1) Preferred

Be sure that the engine oil you use comes under the quality classification of ACEA A5/B5. Select the appropriate oil viscosity according to the above chart.

SAE 5W-30 is the best choice for good fuel economy, and good starting in cold weather.

Oil Level Check

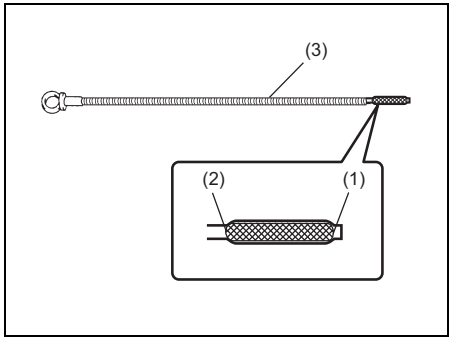

84E012

(1) MIN
(2) MAX
(3) Engine oil dipstick

It is important to keep the engine oil at the correct level for proper lubrication of your vehicle's engine. Check the oil level with the vehicle on a level surface. The oil level indication may be inaccurate if the vehicle is on a slope. The oil level should be checked either before starting the engine or at least 5 minutes after stopping the engine.
The handle of the engine oil dipstick is coloured yellow for easy identification.

Pull out the oil dipstick, wipe oil off with a clean cloth, insert the dipstick all the way into the engine, then remove it again. The oil on the stick should be between the MAX and MIN limits shown on the stick. If the oil level indication is near the lower limit, add enough oil to raise the level to the upper limit.

NOTICE
Failure to check the oil level regularly could lead to serious engine trouble due to insufficient oil.

NOTICE
Do not top up the oil over the MAX limit. Too much oil causes serious engine trouble.

Refilling

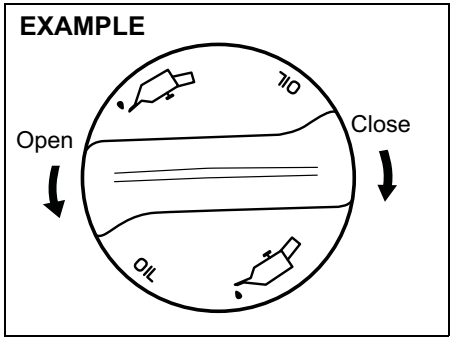

82PM07001

Remove the oil filler cap and pour oil slowly through the filler hole to bring the oil level to the upper limit on the dipstick. Be careful not to overfill. Too much oil is almost as bad as too little oil. After refilling, start the engine and allow it to idle for about a minute. Stop the engine, wait about 5 minutes and check the oil level again.

Changing Engine Oil and Filter

Drain the engine oil while the engine is still warm.

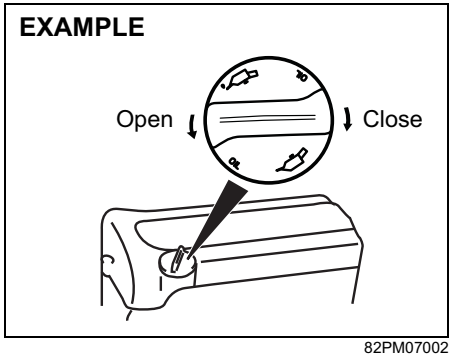

82PM07002

1) Remove the oil filler cap.
2) Place a drain pan under the drain plug.
3) Using a wrench, remove the drain plug and drain out the engine oil.

⚠ CAUTION
The engine oil temperature may be high enough to burn your fingers when the drain plug is loosened. Wait until the drain plug is cool enough to touch with your bare hands.

EXAMPLE

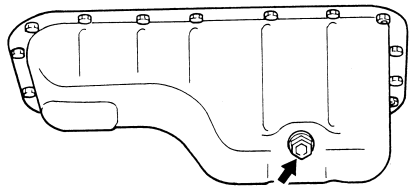

60G306

Tightening torque for drain plug
20 Nm (2.0 kg-m, 14.8 lb-ft)

⚠ WARNING

New and used oil can be hazardous. Children and pets may be harmed by swallowing new or used oil. Keep new and used oil and used oil filters away from children and pets.
Repeated, prolonged contact with used engine oil may cause skin cancer.
Brief contact with used oil may irritate skin.

(Continued)

⚠ WARNING

(Continued)
To minimize your exposure to used oil, wear a long-sleeve shirt and moisture-proof gloves (such as dish-washing gloves) when changing oil. If oil contacts your skin, wash thoroughly with soap and water.
Launder any clothing or rags if wet with oil.
Recycle or properly dispose of used oil and filters.

4) Reinstall the drain plug with the new gasket. Tighten the plug with a wrench to the specified torque.

Replace the Oil Filter

NOTE:
Since special procedures and tools are required, it is recommended that you take your vehicle to your authorised Maruti Suzuki workshop.

1) Using a socket or a ring spanner remove oil filter housing cover (3).

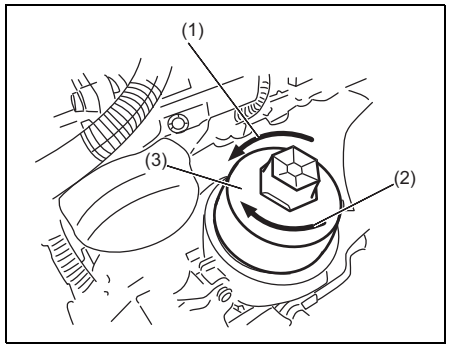

61M7001

(1) Loosen
(2) Tighten

2) Remove the old oil filter element and replace it with a new oil filter element.
3) Clean the surface of oil filter cap and replace the O-ring.
4) Tighten the oil filter housing cover on the oil filter housing using a socket or ring spanner to the specified torque.

Tightening torque for oil filter
25 Nm (2.5 kg-m, 18.5 lb-ft)

NOTICE
To prevent oil leakage, make sure that the oil filter is tight, but do not over-tighten it.

Refill with Oil and Check for Leaks

1) Pour oil through the filler hole and install the filler cap.
   For the approximate capacity of the oil, refer to the “Capacities” item in the “SPECIFICATIONS” section.
2) Start the engine and look carefully for leaks at the oil filter and drain plug. Run the engine at various speeds for at least 5 minutes.
3) Stop the engine and wait about 5 minutes. Check the oil level again and add oil if necessary. Check for leaks again.

NOTICE
• **When replacing the oil filter, it is recommended that you use a genuine MARUTI genuine replacement filter. If you use an aftermarket filter, make sure it is of equivalent quality and follow the manufacturer’s instructions.** • **Oil leaks from around the oil filter or drain plug indicate incorrect installation or gasket damage. If you find any leaks or are not sure that the filter has been properly tightened, have the vehicle inspected by your authorised Maruti Suzuki workshop.**

Engine Coolant

Selection of Coolant

To maintain optimum performance and durability of your engine, use MARUTI Genuine Coolant or equivalent.
This type of coolant is best for your cooling system as it:

- Helps maintain proper engine temperature.
- Gives proper protection against freezing and boiling.
- Gives proper protection against corrosion and rust.

Failure to use the proper coolant can damage your cooling system. Your authorised Maruti Suzuki workshop can help you select the proper coolant.

NOTICE

To avoid damaging your cooling system:
- **Always use a high quality ethylene glycol base non-silicate type coolant diluted with distilled water at the correct mixture concentration.**
- **Make sure that the proper mix is 50/50 coolant to distilled water and in no case higher than 70/30. Concentrations greater than 70/30 coolant to distilled water will cause overheating conditions.**
- **Do not use straight coolant nor plain water.**
- **Do not add extra inhibitors or additives. They may not be compatible with your cooling system.**
- **Do not mix different types of base coolants. Doing so may result in accelerated seal wear and/or the possibility of severe overheating and extensive engine damage.**

Coolant Level Check

Check the coolant level at the reservoir tank, not at the radiator. With the engine cool, the coolant level should be between the “FULL” and “LOW” marks.

Adding Coolant

⚠ WARNING

Swallowing engine coolant can cause severe injury or death. Inhaling coolant mist or vapors or getting coolant in your eyes could result in severe injury.
- **Do not drink antifreeze or coolant solution. If swallowed, do not induce vomiting. Immediately contact a poison control center or a physician.**
- **Avoid inhaling coolant mist or hot vapors. If inhaled, remove to a fresh air area.**
- **If coolant gets in the eyes, flush with water and seek medical attention.**
- **Wash thoroughly after handling coolant.**
- **Keep engine coolant out of the reach of children and pets.**

NOTICE

- **The mixture you use should contain 50% concentration of antifreeze.**
- **If the lowest ambient temperature in your area is expected to be –35°C (–31°F) or below, use higher concentrations up to 60% following the instructions on the antifreeze container.**

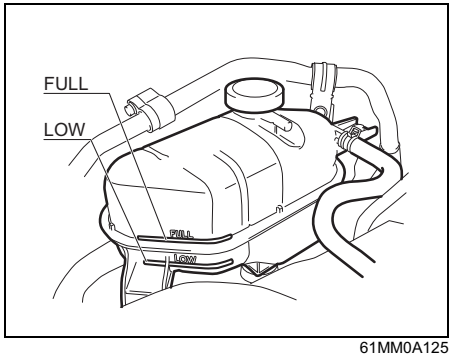

61MM0A125

⚠ WARNING

It is hazardous to remove the reservoir tank cap (degassing tank cap) for a diesel engine when the water temperature is high, because scalding fluid and steam may be blown out under pressure. Wait until the coolant temperature has lowered before removing the cap.

If the coolant level is below the “LOW” mark, more coolant should be added. When the engine is cool, remove the degassing tank cap by turning it anticlockwise slowly to release any pressure. And add coolant until the degassing tank level reaches the “FULL” mark. Never fill the degassing tank above the “FULL” mark.

Coolant Replacement

Since special procedures are required, we recommend you take your vehicle to your authorised Maruti Suzuki workshop for coolant replacement.

Air Cleaner

If the air cleaner is clogged with dust, there will be greater intake resistance, resulting in decreased power output and increased fuel consumption.

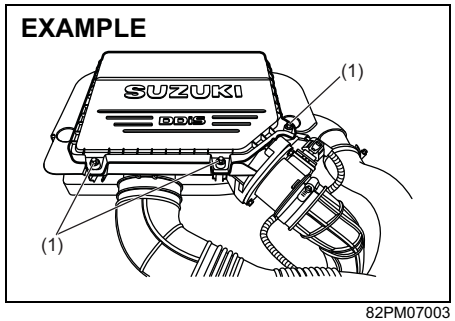

82PM07003

Unscrew the mounting screws (1) and remove the element from the air cleaner case. If the element appears to be dirty clean the element or replace it with a new one as per periodic maintenance schedule. Ensure proper fitment of gasket after air cleaning element cleaning or replacement.

Tightening torque (1):
3 Nm (0.3 kg-m, 2.2 lb-ft)

Gear Oil

Manual Transaxle Oil

When adding gear oil, use gear oil with the appropriate viscosity and grade as shown in the chart below.

We highly recommend you use:
"MARUTI GENUINE GEAR OIL **75W-80**" for manual transaxle gear oil.

Manual transaxle oil

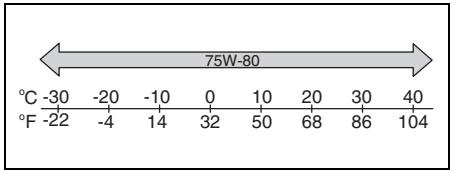

68LM728

Gear Oil Level Check

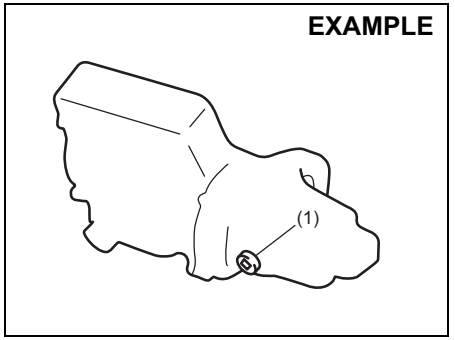

52LM021

(1) Oil filler and level plug

To check the gear oil level, use the following procedure:

1) Park the vehicle on a level surface with the parking brake applied. Then, stop the engine.
2) Remove the oil filler and level plug.
3) If gear oil flows from the plug hole, the oil level is correct. Reinstall the plug. If gear oil does not flow from the plug hole, add oil through the filler plug hole until oil flows a little from the plug hole.

   Tightening torque (1):
   21 Nm (2.1 kg-m, 15.5 lb-ft)

⚠ CAUTION

After driving the vehicle, the transaxle oil temperature may be high enough to burn your skin. Wait until the oil filler plug is cool enough to touch with your bare hands before inspecting transaxle oil.

NOTICE

When tightening the plug, apply the following sealing compound or equivalent to the plug threads to prevent oil leakage.

Manual transaxle sealant:
MARUTI SUZUKI Bond No. "1216E" or "1217G"

Gear Oil Change

Since special procedures, materials and tools are required, it is recommended that you trust this job to your authorised Maruti Suzuki workshop.

Clutch Pedal

Fluid Control Clutch

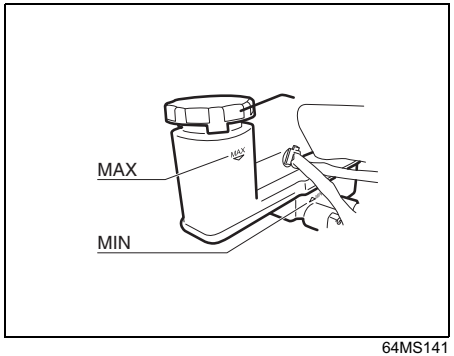

64MS141

Check the clutch pedal for smooth operation and clutch fluid level from time to time. If clutch dragging is felt with the pedal fully depressed, have the clutch inspected by your authorised Maruti Suzuki workshop. If the clutch fluid level is near the "MIN" line, fill it up to the "MAX" line with Maruti Genuine Brake Fluid (MGBF) or DOT 3.
We highly recommend to use "Maruti Genuine Brake Fluid" (MGBF).

Fuel Filter

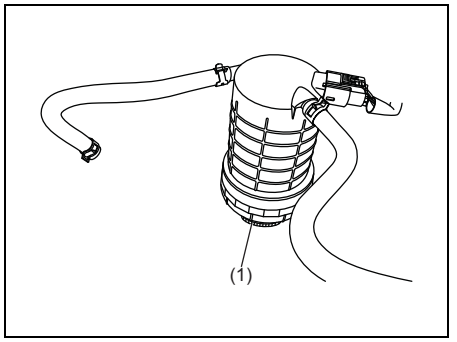

82PM07023

The fuel filter works as a water sedimentor as well.

Drain water according to the Periodic Maintenance Schedule. To drain water:

1) Place a pan or ample rag under the fuel filter drain nozzle.
2) Loosen the drain knob (1). The water will be drained.
3) Tighten the drain knob (1) when the water changes to the diesel fuel.
4) Tighten the drain knob (1).

Tightening torque for drain knob
2.5 Nm (0.25 kg-m, 1.84 lb-ft)

Brakes

Brake Fluid

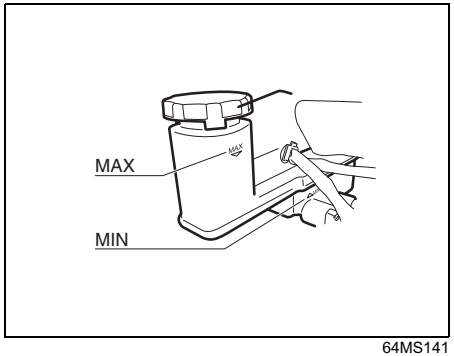

64MS141

Check the brake fluid level by looking at the reservoir in the engine compartment. Check that the fluid level is between the “MAX” and “MIN” lines. If the brake fluid level is near the “MIN” line, fill it up to the “MAX” line with Maruti Genuine Brake Fluid (MGBF) or DOT 3.
We highly recommend to use “Maruti Genuine Brake Fluid” (MGBF).

⚠ WARNING

Failure to follow the guidelines below can result in personal injury or serious damage to the brake system.

- **If the brake fluid in the reservoir drops below a certain level, the brake warning light on the instrument panel will come on (the engine must be running with the parking brake fully disengaged). Should the light come on, immediately ask your authorised Maruti Suzuki workshop to inspect the brake system.**
- **A rapid fluid loss indicates a leak in the brake system which should be inspected by your authorised Maruti Suzuki workshop immediately.**
- **Do not use any fluid other than Maruti Genuine Brake Fluid (MGBF) or DOT 3. Do not use reclaimed fluid or fluid that has been stored in old or open containers. It is essential that foreign particles and other liquids are kept out of the brake fluid reservoir.**

⚠ CAUTION

Brake fluid can harm your eyes and damage painted surfaces. Use caution when refilling the reservoir.

⚠ WARNING

Brake fluid is harmful or fatal if swallowed, and harmful if it comes in contact with skin or eyes. If swallowed, do not induce vomiting. Immediately contact a poison control center or a physician. If brake fluid gets in eyes, flush eyes with water and seek medical attention. Wash thoroughly after handling. Solution can be poisonous to animals. Keep out of the reach of children and animals.

NOTE:
With disc brakes, the fluid level can be expected to gradually fall as the brake pads wear.

Brake Pedal

Check if the brake pedal stops at the regular height without spongy feeling when you depress it. If not, have the brake system inspected by your authorised Maruti Suzuki workshop. If you doubt the brake pedal for the regular height, check it as follows:

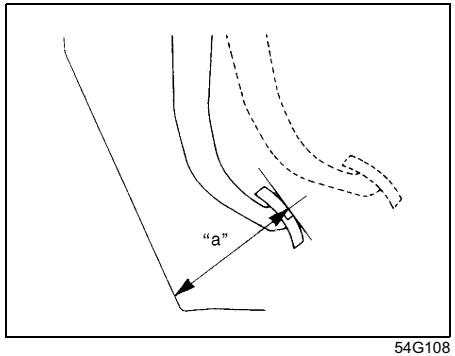

54G108

Pedal to floor carpet minimum distance "a":
58 mm (2.3 in.)

With the engine running, measure the distance between the brake pedal and floor carpet when the pedal is depressed with approximately 30 kg (66 lbs) of force. The minimum distance required is as specified. Since your vehicle's brake system is self-adjusting, there is no need for pedal adjustment.
If the pedal to floor carpet distance as measured above is less than the minimum distance required, have your vehicle inspected by your authorised Maruti Suzuki workshop.

NOTE:
When measuring the distance between the brake pedal and floor wall, be sure not to include the floor mat or rubber on the floor wall in your measurement.

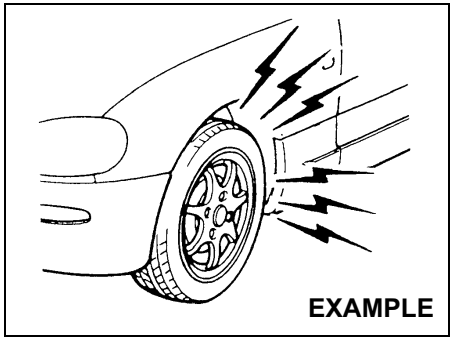

60G104S

⚠ WARNING

If you experience any of the following problems with your vehicle's brake system, have the vehicle inspected immediately by your authorised Maruti Suzuki workshop.
- **Poor braking performance**
- **Uneven braking (brakes not working uniformly on all wheels.)**
- **Excessive pedal travel**
- **Brake dragging**
- **Excessive noise**
- **Pedal pulsation (pedal pulsates when depressed.)**

Parking Brake

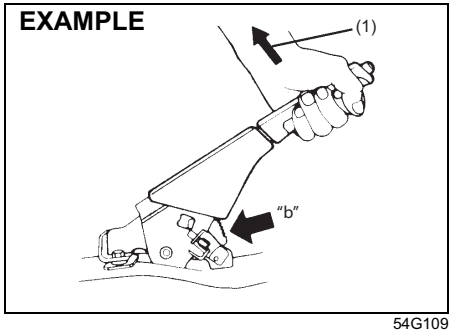

54G109

Ratchet tooth specification "b":
4th – 9th
Lever pull force (1):
200 N (20 kg, 45 lbs)

Check the parking brake for proper adjustment by counting the number of clicks made by the ratchet teeth as you slowly pull up on the parking brake lever to the point of full engagement. The parking brake lever should stop between the specified ratchet teeth and the rear wheels should be securely locked. If the parking brake is not properly adjusted or the brakes drag after the lever has been fully released, have the parking brake inspected and/or adjusted by your authorised Maruti Suzuki workshop.

Steering

EXAMPLE

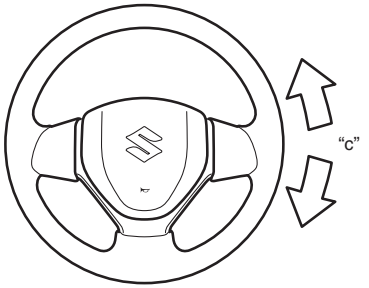

68LM708

Steering wheel play "c":
0 – 30 mm (0.0 – 1.2 in.)

Check the play of the steering wheel by gently turning it from left to right and measuring the distance that it moves before you feel slight resistance. The play should be between the specified values.

Check that the steering wheel turns easily and smoothly without rattling by turning it all the way to the right and to the left while driving very slowly in an open area. If the amount of free play is outside the specification or you find anything else to be wrong, an inspection must be performed by your authorised Maruti Suzuki workshop.

Tires

EXAMPLE

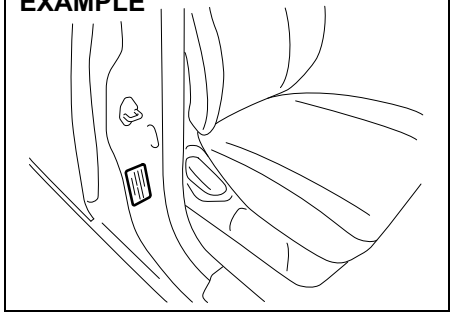

68KH075

The front and rear tire pressure specifications for your vehicle are listed on the Tire Information Label. Both the front and rear tires should have the specified tire pressure.
Note that the value does not apply to the spare tire, if equipped.

Tire Inspection

Inspect your vehicle's tires at least once a month by performing the following checks:

1) Measure the air pressure with a tire gauge. Adjust the pressure if necessary. Remember to check the spare tire, too.

⚠ WARNING

- **Air pressures should be checked when the tires are cold or you may get inaccurate readings.**
- **Check the inflation pressure from time to time while inflating the tire gradually, until the specified pressure is obtained.**
- **Never under inflate or over inflate the tires.**
  Under inflation can cause unusual handling characteristics or can cause the rim to slip on the tire bead, resulting in an accident or damage to the tire or rim.
  Over inflation can cause the tire to burst, resulting in personal injury. Over inflation can also cause unusual handling characteristics which may result in an accident.

EXAMPLE

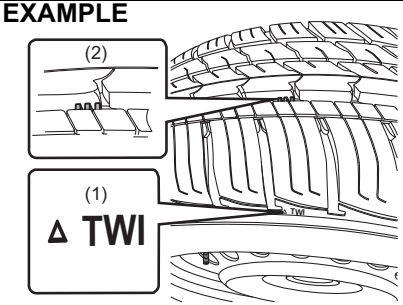

82CM09008

(1) Tread wear indicator
(2) Indicator location mark

2) Check that the depth of the tread groove is more than 1.6 mm (0.06 in.). To help you check this, the tires have molded-in tread wear indicators in the grooves. When the indicators appear on the tread surface, the remaining depth of the tread is 1.6 mm (0.06 in.) or less and the tire should be replaced.
3) Check for abnormal wear, cracks and damage. Any tires with cracks or other damage should be replaced. If any tires show abnormal wear, have them inspected by your authorised Maruti Suzuki workshop.

⚠ CAUTION

Hitting curbs and running over rocks can damage tires and affect wheel alignment. Be sure to have tires and wheel alignment checked periodically by your authorised Maruti Suzuki workshop.

4) Check for loose wheel nuts.
5) Check that there are no nails, stones or other objects sticking into the tires.

⚠ WARNING

- **Your MARUTI SUZUKI is equipped with tires which are all the same type and size. This is important to ensure proper steering and handling of the vehicle. Never mix tires of different size or type on the four wheels of your vehicle. The size and type of tires used should be only those approved by MARUTI SUZUKI as standard or optional equipment for your vehicle.**
- **Replacing the wheels and tires equipped on your vehicle with certain combinations of aftermarket wheels and tires can significantly change the steering and handling characteristics of your vehicle.**
- **Therefore, use only those wheel and tire combinations approved by MARUTI SUZUKI as standard or optional equipment for your vehicle.**

NOTICE

Replacing the original tires with tires of a different size may result in false speedometer or odometer readings. Check with your authorised Maruti Suzuki workshop before purchasing replacement tires that differ in size from the original tires.

Tire Rotation

5-tire rotation

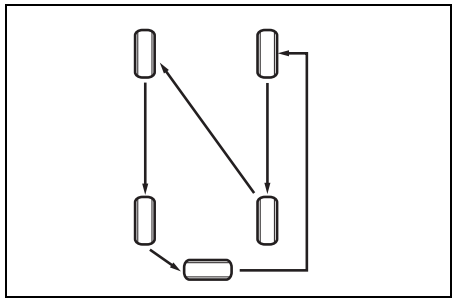

80JK040

If your vehicle is equipped with a spare tire which is a different wheel type than the wheels on the vehicle, you must use a 4-tire rotation as shown in the example below.

4-tire rotation

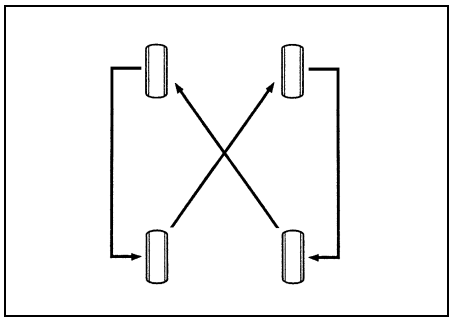

54G114

To avoid uneven wear of your tires and to prolong their life, rotate the tires as illustrated. Tires should be rotated every 10000 km. After rotation, adjust front and rear tire pressures to the specification listed on your vehicle's Tire Information Label.

Wheel Balancing
If the vehicle vibrates abnormally on smooth road, have the wheel balanced at authorised Maruti Suzuki workshop.

Wheel Alignment
In case of abnormal tire wear or pulling towards one side, have the wheel aligned at authorised Maruti Suzuki workshop.

Tubeless Tires
The vehicle is equipped with Tubeless Tyres. In tubeless tire, a thin layer of butyl rubber is used for lining the inside of the tubeless tire. This layer is to prevent air loss and fulfilling the purpose of tube. The air pressure is maintained by the sealing between tire bead and wheel rim. Tubeless tires are having advantage of slow air loss and preventing sudden deflation while driving.

Care and maintenance tips for tubeless tires
1) Always maintain recommended inflation pressure. Driving continuously at low inflation pressure can lead to tyre damage.
2) In case any leakage is found, check for any nail penetration/valve core damage or rim bent. Damaged wheel must not be used.
3) In case tire has run at low pressure, it must be inspected for any defect.
4) Whenever new tire is fitted, replace the valve.
5) If continuous high speed driving is required, increase tires pressure by 5 psi over recommended inflation pressure.
6) Never run the tire beyond TWI (Tread wear indicator). The tire is recommended to be replaced when the remaining tread has worn to this point. The indicators are spaced across the tread around the tire marked by a triangular symbol (TWI).
7) Always prefer tubeless tire mounting machine. In case of manual mounting-tire/wheel rim damage may occur.
8) In case of any problem, please get in touch with authorised MARUTI SUZUKI workshop.

Temporary Spare Tire (if equipped)

Your vehicle comes equipped with the temporary spare tire. It is only intended for temporary emergency use, until the conventional tire can be repaired or replaced. The inflation pressure of the temporary spare tire should be checked at least monthly. At the same time, check that the tire is stored securely. If it is not, tighten it.

Note that two or more temporary spare tires should not be used on one vehicle simultaneously.

⚠ WARNING

The temporary spare tire and wheel are intended for temporary emergency use only. Continuous use of this spare can result in tire failure and loss of control. Always observe these precautions when using this spare:
- **Your vehicle will handle differently with this temporary spare.**
- **Do not exceed 120 km/h (75 mph) speed (only vehicle with 215/60R16 95H tire).**
- **Replace this spare with a standard tire and wheel as soon as possible.**
- **Use of this spare may reduce ground clearance.**
- **Set the specified tire pressure indicated on the tire information label located on the driver's door lock pillar.**
- **Do not use tire chains on the temporary spare. If you must use tire chains, rearrange the wheels so standard tires and wheels are fitted to the front axle.**
- **The temporary spare tire may have shorter tread life than the conventional tires on your vehicle. Replace the tire as soon as the tread wear indicator appears.**
- **When replacing the temporary spare tire, use a replacement tire with the exact same size and construction.**

Battery

⚠ WARNING

- **Batteries produce flammable hydrogen gas. Keep flames and sparks away from the battery or an explosion may occur. Never smoke when working in the vicinity of the battery.**
- **When checking or servicing the battery, disconnect the negative cable. Be careful not to cause a short circuit by allowing metal objects to contact the battery posts and the vehicle at the same time.**
- **To avoid harm to yourself or damage to your vehicle or battery, follow the jump starting instructions in the "EMERGENCY SERVICE" section of this manual if it is necessary to jump start your vehicle.**
- **Diluted sulfuric acid spilled from battery can cause blindness or severe burns. Use proper eye protection and gloves. Flush eyes or body with ample water and get medical care immediately if suffered. Keep batteries out of the reach of children.**

EXAMPLE

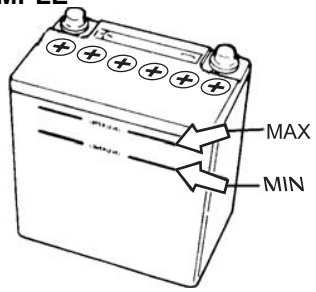

54GM701

The level of the battery solution must be kept between the "MAX" and the "MIN" level lines at all times. If the level is found to be below the "MIN" level line, add distilled water to the "MAX" level line. You should periodically check the battery, battery terminals, and battery hold-down bracket for corrosion. Remove corrosion using a stiff brush and ammonia mixed with water, or baking soda mixed with water. After removing corrosion, rinse with clean water.

If your vehicle is not going to be driven for a month or longer, disconnect the cable from the negative terminal of the battery to help prevent discharge.

EXAMPLE

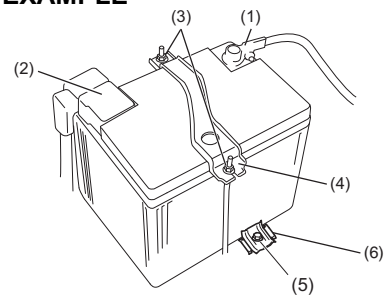

68PH00720

To remove the battery:
1) Disconnect the negative cable (1).
2) Disconnect the positive cable (2).
3) Remove the retainer nuts (3) and remove retainer (4).
4) Remove the bracket bolt (5) and remove the bracket (6).
5) Remove the battery.

To install the battery:
1) Install the battery in the reverse order of removal.
2) Tighten the bracket bolt, retainer nutsa and battery cables securely.

NOTE:
When the battery is disconnected, some of the vehicle's function will be initialized and/or deactivated.
These function are required to reset after the battery is reconnected.

Fuses

Your vehicle has three types of fuses, as described below:

Main fuse
The main fuse takes current directly from the battery.

Primary fuses
These fuses are between the main fuse and individual fuses, and are for electrical load groups.

Individual fuses
These fuses are for individual electrical circuits.

To remove a fuse, use the fuse puller provided in the back of fuse box cover.

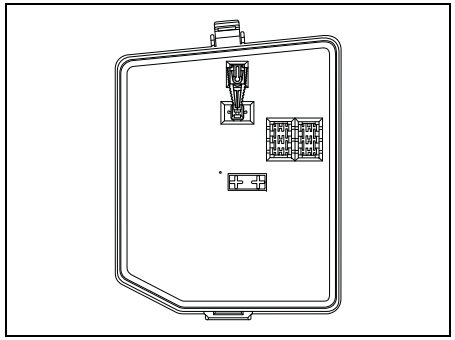

82PM07028

Fuses in the Engine Compartment

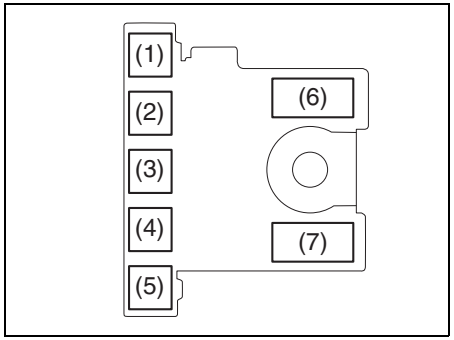

61MM0B068

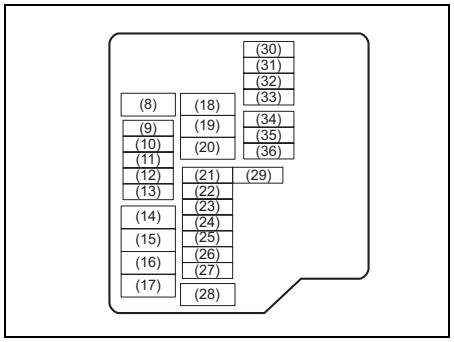

82PH065

MAIN FUSE/PRIMARY FUSE		
(1)	60A	FL7
(2)	80A	FL6
(3)	100A	FL5
(4)	80A	FL4
(5)	100A	FL3
(6)	100A	FL2
(7)	120A	FL1
(8)	50A	Ignition switch -2
(9)	7.5A	ECM
(10)	10A	Air compressor
(11)	30A	FI
(12)	20A	Fuel pump
(13)	30A	Back up
(14)	–	Blank
(15)	–	Blank
(16)	40A	Radiator fan
(17)	–	Blank
(18)	30A	Blower fan
(19)	30A	Starting motor
(20)	40A	ABS motor
(21)	10A	Stop light
(22)	–	Blank
(23)	25A	Head light main
(24)	25A	ABS control module

(25)	15A	Head light low (Left)
(26)	15A	Head light low (Right)
(27)	10A	Front fog light
(28)	40A	Ignition switch
(29)	7.5A	Starting Signal
(30)	–	Blank
(31)	–	Blank
(32)	15A	Head light high (Right)
(33)	15A	Head light high (Left)
(34)	20A	INJ DRV
(35)	10A	FI2
(36)	–	Blank

The main fuse, primary fuses and some of the individual fuses are located in the engine compartment. If the main fuse blows, no electrical component will function. If a primary fuse blows, no electrical component in the corresponding load group will function. When replacing the main fuse, a primary fuse or an individual fuse, use a Maruti Genuine Part.
To remove a fuse, use the fuse puller provided in the back of fuse box cover. The amperage of each fuse is shown in the back of the fuse box cover.

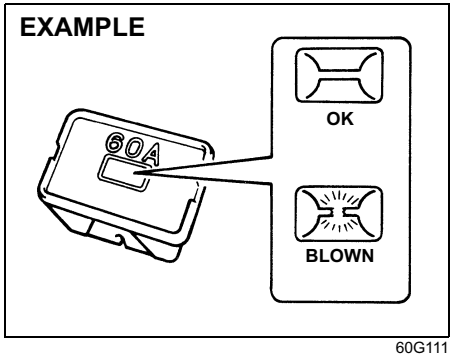

60G111

⚠ WARNING

If the main fuse or a primary fuse blows, be sure to have your vehicle inspected by an authorised Maruti Suzuki workshop. Always use a Maruti Genuine Part. Never use a substitute such as a wire even for a temporary repair, or extensive electrical damage and a fire can result.

NOTE:
Make sure that the fuse box always carries spare fuses and fuse puller.

Fuses under the Dash Board

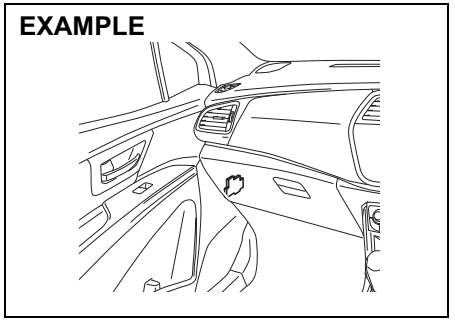

64MS153

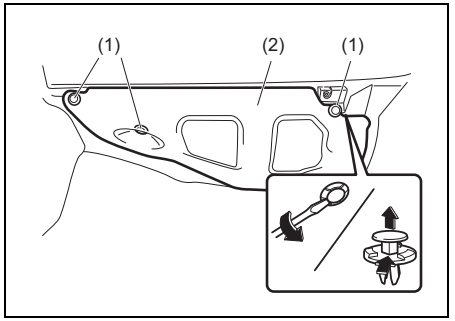

64MS112

NOTE:
To approach the fuses, remove the clips (1) by prying it off with a flat blade screwdriver as shown in the illustration, then remove the cover (2).

Type A

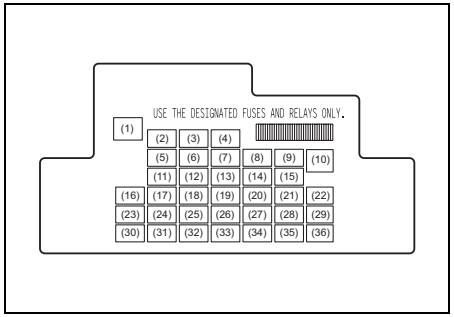

68LM701

PRIMARY FUSE		
(1)	–	Blank
(2)	20 A	Power window timer
(3)	15 A	Steering lock
(4)	20 A	Rear defogger
(5)	20 A	Sunroof
(6)	10 A	DRL
(7)	10 A	Heated mirror
(8)	7.5 A	Starting signal
(9)	15 A	Accessory socket 2
(10)	30 A	Power window
(11)	10 A	Hazard
(12)	7.5 A	BCM
(13)	15 A	Ignition coil
(14)	10 A	ABS control module
(15)	15 A	Accessory socket
(16)	10 A	A-STOP controller
(17)	15 A	Horn
(18)	10 A	Stop light
(19)	10 A	Air bag
(20)	10 A	Back-up light
(21)	15 A	Wiper / Washer
(22)	30 A	Front wiper
(23)	10 A	Dome light
(24)	15 A	4WD
(25)	7.5 A	RR fog lamp
(26)	–	Blank
(27)	7.5 A	Ignition-1 signal
(28)	15 A	Radio 2
(29)	10 A	Accessory socket 3
(30)	15 A	Radio
(31)	10 A	Tail lamp
(32)	20 A	D/L
(33)	7.5 A	Cruise control
(34)	10 A	Meter
(35)	7.5 A	Ignition-2 signal
(36)	20 A	Seat heater

Type B

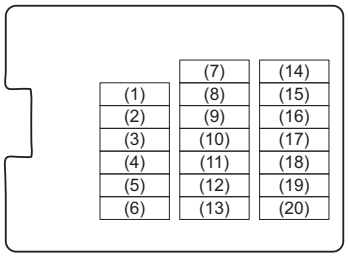

82PM07024

PRIMARY FUSE		
(1)	15A	ACC-2
(2)	15A	ACC-1
(3)	10A	Tail lamp
(4)	15A	Horn
(5)	10A	Dome light
(6)	15A	Radio
(7)	10A	ABS

(8)	20A	Power window timer
(9)	10A	Hazard
(10)	20A	D/L
(11)	7.5A	Ignition-2 signal
(12)	30A	Front wiper
(13)	15A	Wiper
(14)	7.5A	Starting Signal
(15)	15A	Ignition coil
(16)	10A	Meter
(17)	10A	Back-up light
(18)	10A	Air bag
(19)	7.5A	Cruise control
(20)	7.5A	Ignition signal

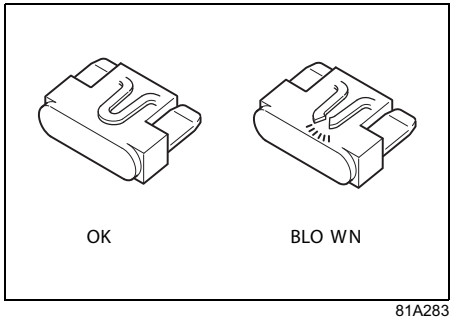

81A283

⚠ WARNING

Always be sure to replace a blown fuse with a fuse of the correct amperage. Never use a substitute such as aluminum foil or wire to replace a blown fuse. If you replace a fuse and the new one blows in a short period of time, you may have a major electrical problem. Have your vehicle inspected immediately by your authorised Maruti Suzuki workshop.

Headlight Aiming

Since special procedures are required, we recommend you take your vehicle to your authorised Maruti Suzuki workshop for headlight alignment.

Bulb Replacement

⚠ CAUTION

- **Light bulbs can be hot enough to burn your finger right after being turned off. This is true especially for halogen headlight bulbs. Replace the bulbs after they become cool enough.**
- **The headlight bulbs are filled with pressurized halogen gas. They can burst and injure you if they are hit or dropped. Handle them carefully.**
- **To avoid injury by sharp-edged parts of the body, wear gloves and a long-sleeved shirt when replacing light bulbs.**

NOTICE

The oils from your skin may cause a halogen bulb to overheat and burst when the lights are on. Grasp a new bulb with a clean cloth.

NOTICE

Frequent replacement of a bulb indicates the need for an inspection of the electrical system. This should be carried out by your authorised Maruti Suzuki workshop.

Headlights

High beam(1)

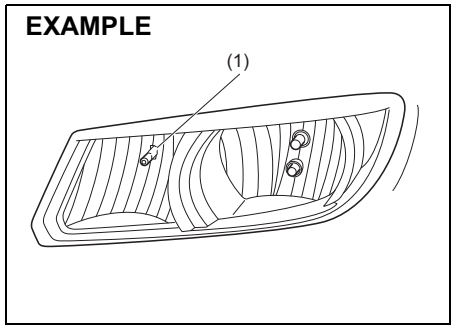

82PM07008

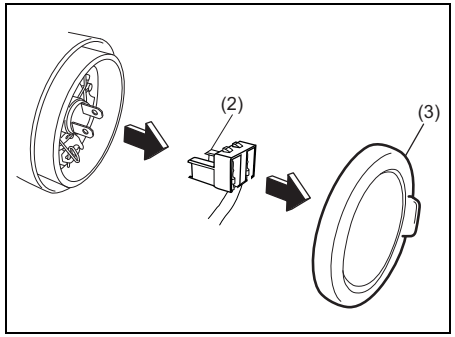

82PM07006

1) Open the engine hood.Remove the sealing rubber (3) and disconnect the coupler (2).

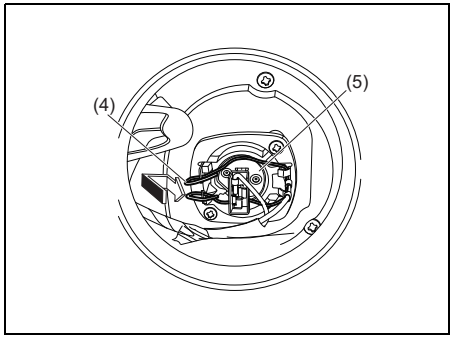

82PM07009

2) Push the retaining spring (4) forward and unhook it. Then remove the bulb (5). Install a new bulb in the reverse order of removal.

Low Beam(1)

Type A

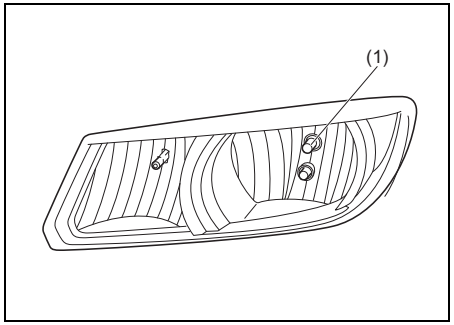

82PH067

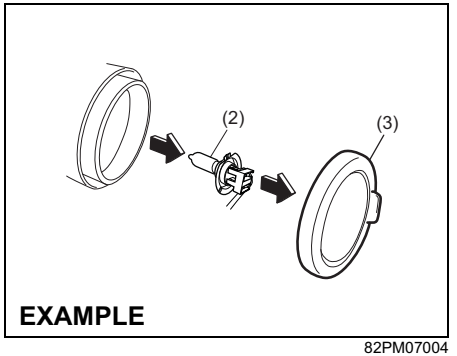

82PM07004

1) Open the engine hood.Remove sealing rubber (3) and pull put the coupler along with the bulb (2).
2) Install the new bulb in reverse order of the removal.

NOTE:
- *When installing the bulb make sure the lug (4) is facing upwards.Ensure that the bulb is properly aligned in bulb housing and push.A click sound confirms the proper locking.*
- *To easily locate/align the bulb, look at the hole from the lamp front.*

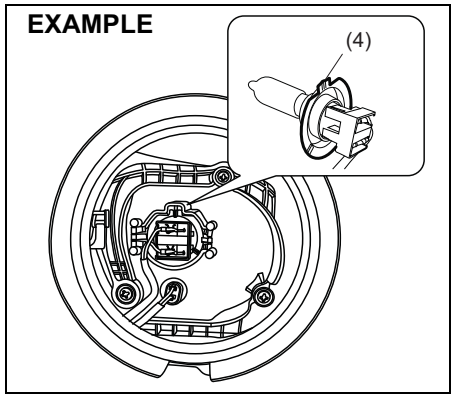

82PM07005

Type B

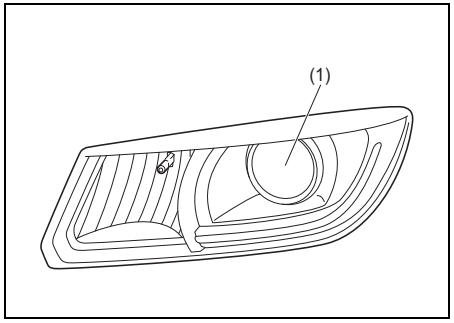

82PH068

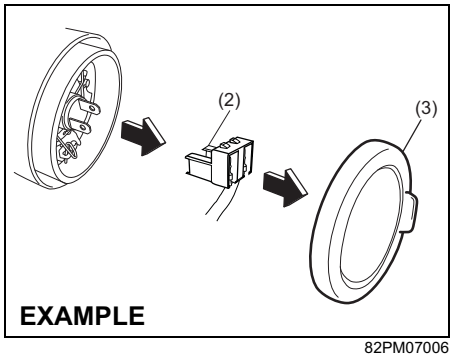

82PM07006

1) Open the engine hood.Remove the sealing rubber (3) and disconnect the coupler (2).

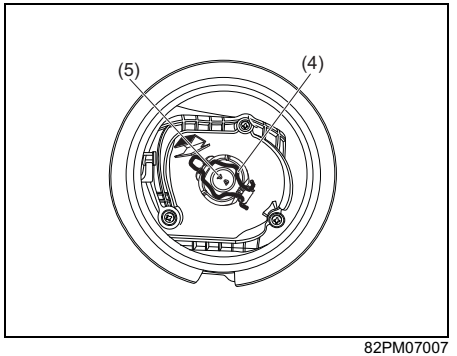

82PM07007

2) Push the retaining spring (4) forward and unhook it. Then remove the bulb (5). Install a new bulb in the reverse order of removal.

Side Turn Signal Light (if equipped)

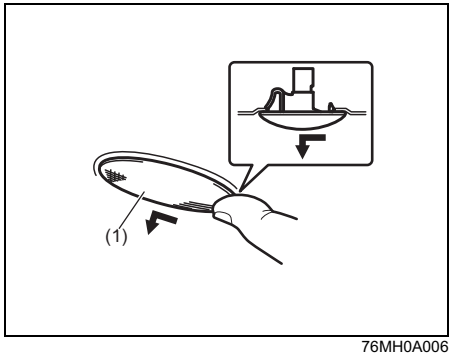

76MH0A006

1) Remove the light housing (1) by sliding to left with your finger.

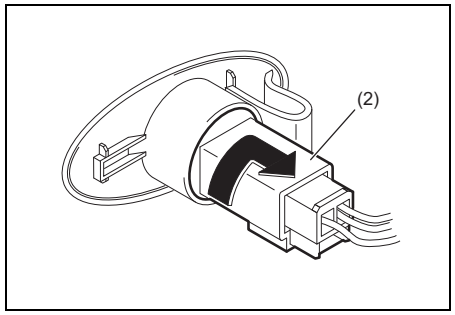

76MH0A007

2) Turn the bulb holder (2) clockwise and pull it out from the light housing.

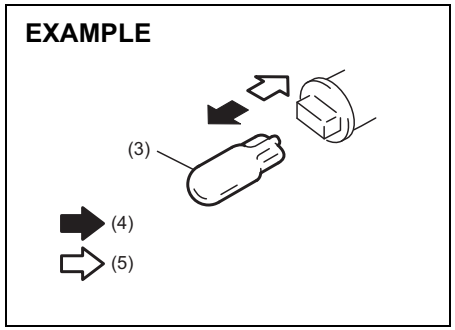

76MH0A008

(4) Removal
(5) Install

3) To remove and install the bulb of the turn signal light (3), simply pull out or push in the bulb.

Front Position Light (1)

Type A

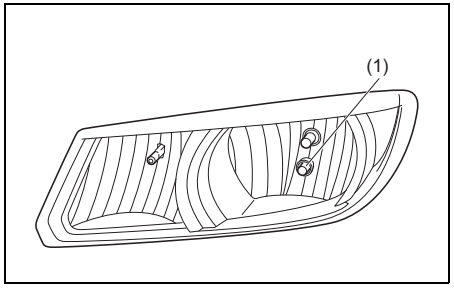

82PM07025

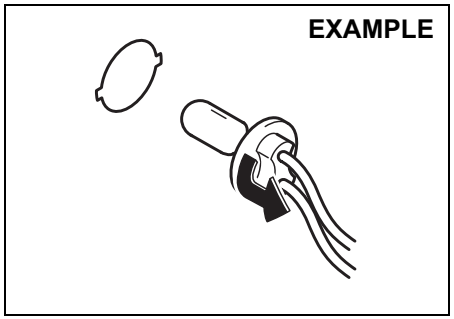

68PH00732

1) Open the engine hood and remove sealing rubber. To remove the bulb holder of the front position light(1) from the light housing, turn the holder counterclockwise and pull it out.

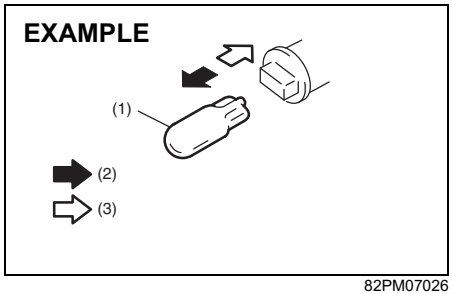

82PM07026

(2) Removal
(3) Installation

2) To remove and install the bulb of the front position light (1), simply pull out or push in the bulb.

Type B

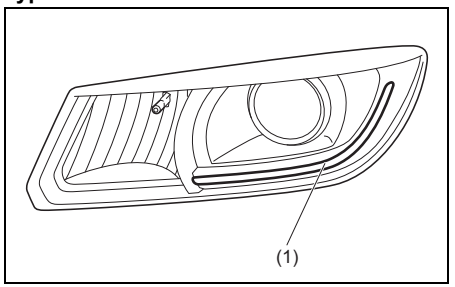

82PM07027

Position function in type B headlamp is LED type which is non replaceable.

Front Turn Signal Light

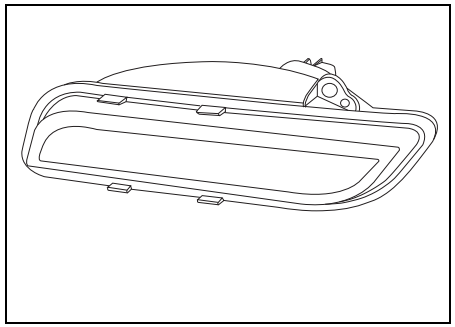

82PM07010

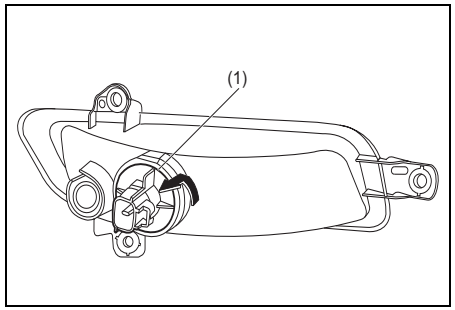

82PM07011

1) Open the engine hood and disconnect the connector. To remove the bulb holder of the front turn signal light (1) from the light housing, turn the holder counterclockwise and pull it out.

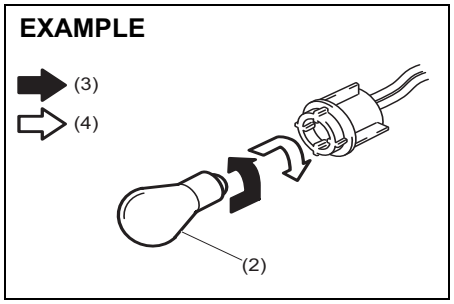

82PM07012

(3) Removal
(4) Install

2) To remove the bulb of the front turn signal light (2) from the bulb holder, push in the bulb and turn it counterclockwise. To install a new bulb, push it in and turn it clockwise.

Front Fog Light (if equipped)

1) Start the engine. Turn the steering wheel to the opposite side of the replacing fog light to replace the bulb easily. Then turn off the engine.

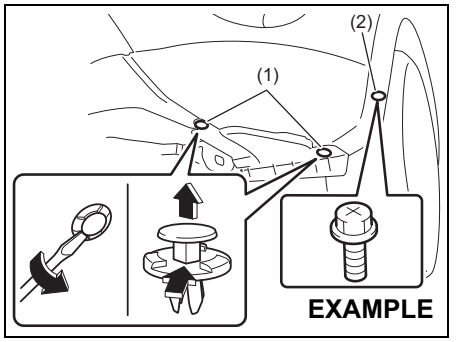

82PM07029

2) Remove all the clips (1) and screws (2) used in fender mounting by prying it off and unscrewing with the help of screwdriver as shown in the illustration.

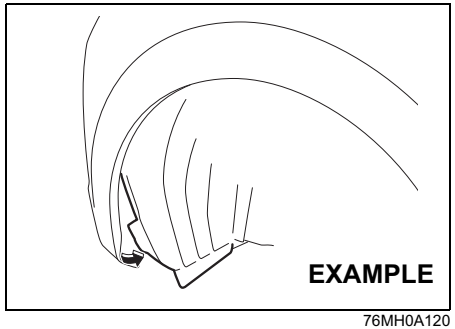

76MH0A120

3) Open the end of the cover inside the fender.

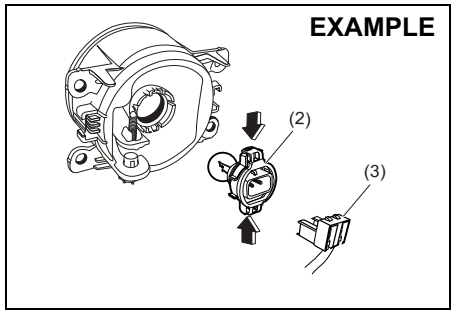

82PM07013

4) Disconnect the coupler (2) by pushing the lock release. Press the top and bottom lock release simultaneously and pull to remove the bulb (3). Install a new bulb in the reverse order of removal.

Rear Combination Light

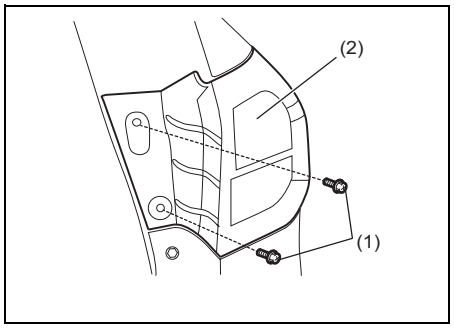

82PM07014

1) Remove the bolts (1) and pull the light housing (2) straight.

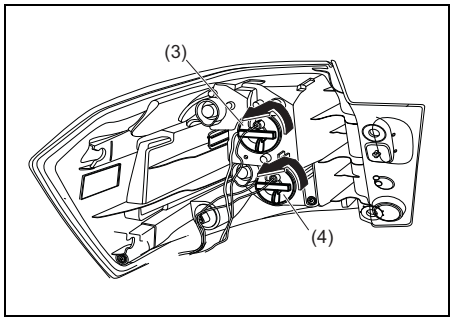

82PM07015

2) To remove the bulb holder of the brake/position light (3) and turn signal light (4) from the light housing, turn the holder counterclockwise and pull it out.

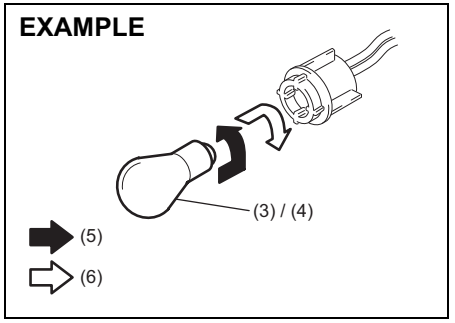

82PM07016

(5) Removal
(6) Install

3) To remove the bulb of the brake/position light (3) and the turn signal light (4) from bulb holder, push the bulb and turn it counterclockwise. To install a new bulb, push it in and turn it clockwise.

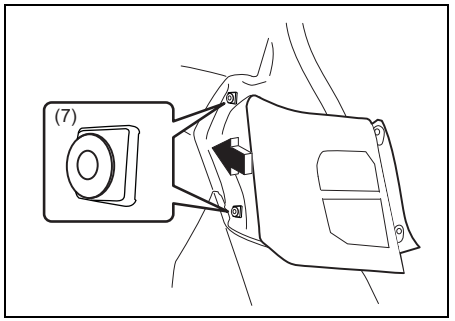

82PM07017

NOTE:
- *When reinstalling the light housing, make sure the clips (7) are properly attached.*
- *If your vehicle is equipped with LED position lights, light (3) will behave as stop light only.*

Reversing Light

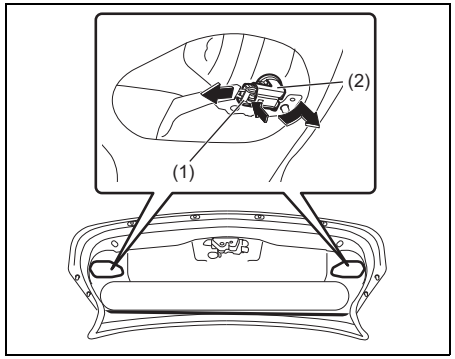

82PM07018

Open the trunk lid and remove the back door trim. Disconnect the coupler (1) by pushing the lock release. Turn the bulb holder (2) counterclockwise and remove it.Pull the bulb to remove. To install a new bulb, push it in and turn the bulb holder in clockwise.

Rear Position Light -Back door (if equipped)

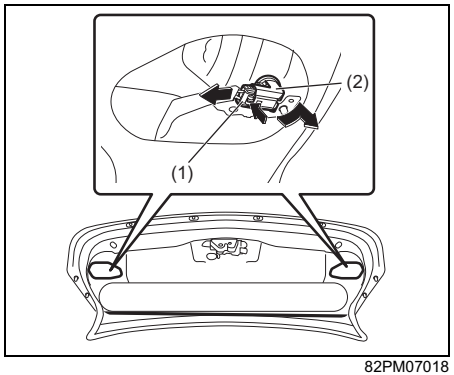

82PM07018

Open the trunk lid and remove the back door trim. Disconnect the coupler (1) by pushing the lock release. Turn the bulb holder (2) counterclockwise and remove it.Pull the bulb to remove.
To install a new bulb, push it in and turn it clockwise.

License Plate Light

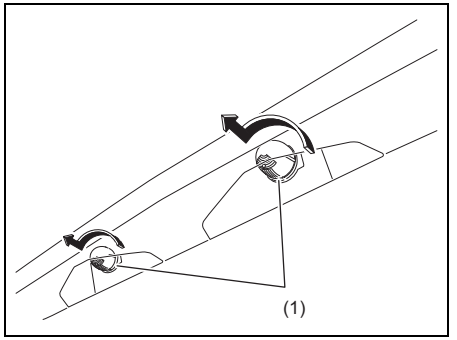

68PH00742

1) Turn the cover (1) counterclockwise to remove it.

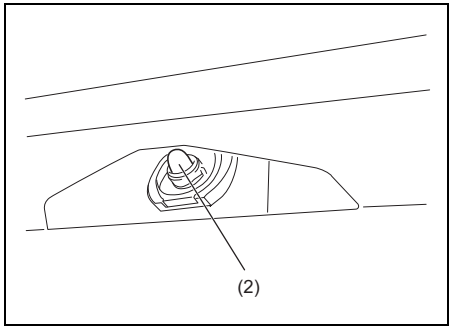

68PH00743

2) To remove and install the bulb of the license plate light (2), simply pull out or push in the bulb.

Interior Light

Front

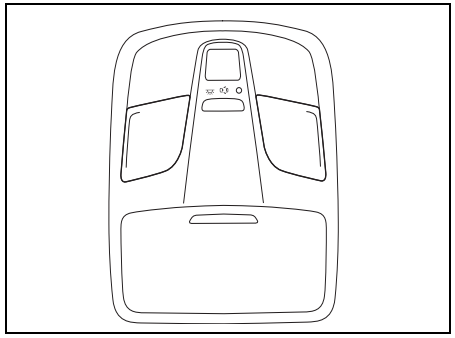

82PM07020

1) Open the stowing box and remove the bolt.Pull out the spot light assembly from the front dome while releasing the locks.
2) Disconnect the connector from the spot light.

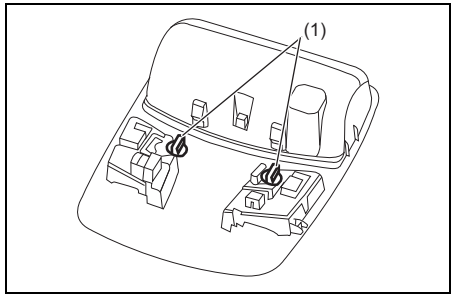

82PM07021

3) Rotate and remove the spot light bulb (1) from the socket.Install a new bulb in the reverse order of removal.

Rear

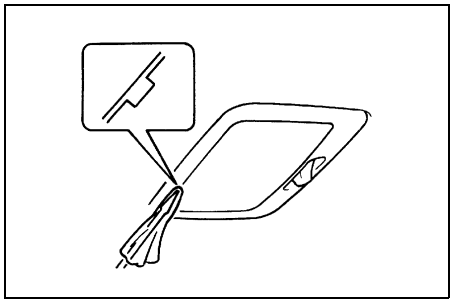

60G115

Remove the lens by using a flat blade screwdriver covered with a soft cloth as shown. To install it, simply push it back in.

Luggage compartment (if equipped)

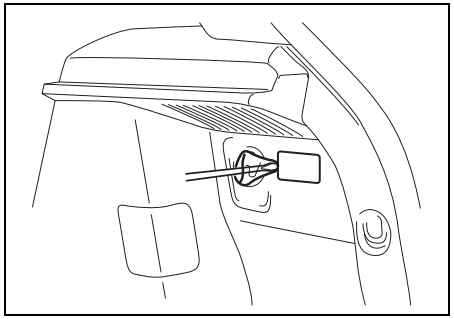

61MM0B072

Glove Box Light (if equipped)

Since special procedures are required, we recommend you take your vehicle to your authorised Maruti Suzuki workshop for bulb replacement.

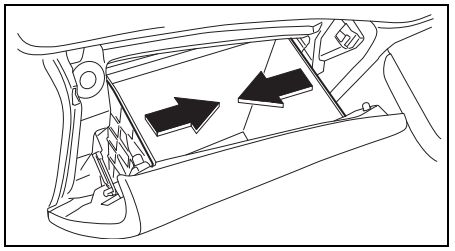

61M0108

1) Press inward on both side of the glove box to unclamp it.

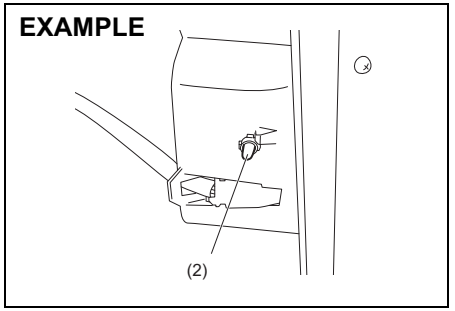

64MS096

2) To remove and install the bulb of the glove box light (2), simply pull out or push in the bulb.

Wiper Blades

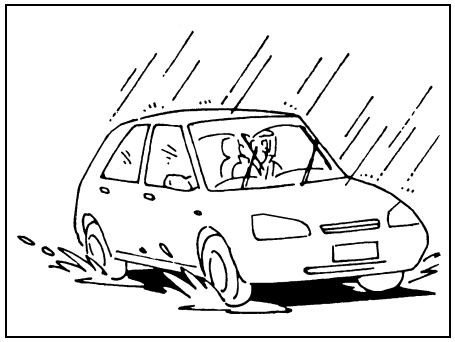

54G129

If the wiper blades become brittle or damaged, or make streaks when wiping, replace the wiper blades.

To install new wiper blades, follow the procedures below.

NOTICE
To avoid scratching or breaking the window, do not let the wiper arm strike the window while replacing the wiper blade.

NOTE:
Some wiper blades may be different from the ones described here depending on vehicle specifications. If so, consult your authorised Maruti Suzuki workshop for proper replacement method.

For windshield wipers:

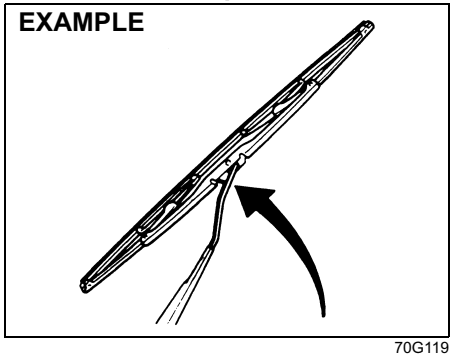

70G119

1) Hold the wiper arm away from the window.

NOTE:
When raising both of the front wiper arms, pull the driver's side wiper arm up first.
When returning the wiper arms, lower the passenger's side wiper arm first.
Otherwise, the wiper arms may interfere with each other which would result in damage of wiper blade.

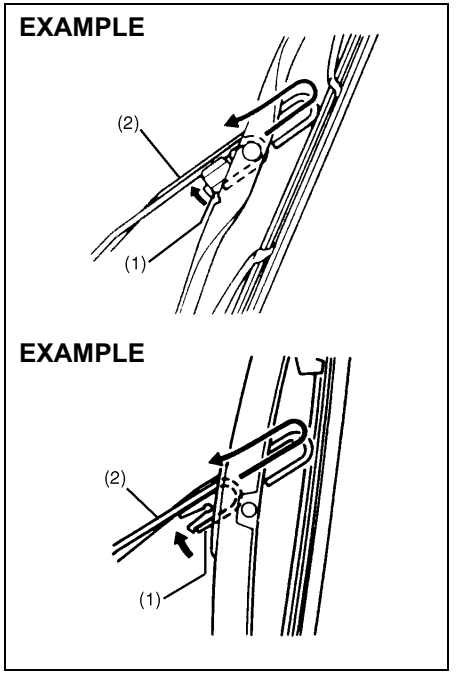

54G130

2) Squeeze lock (1) towards wiper arm (2) and remove the wiper frame from the arm as shown.
3) Unlock the lock end of the wiper blade and slide the blade out as shown.

Removal

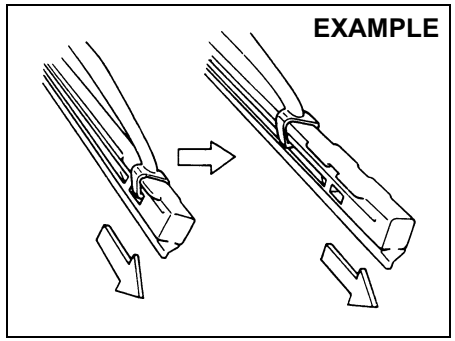

60A260

Installation

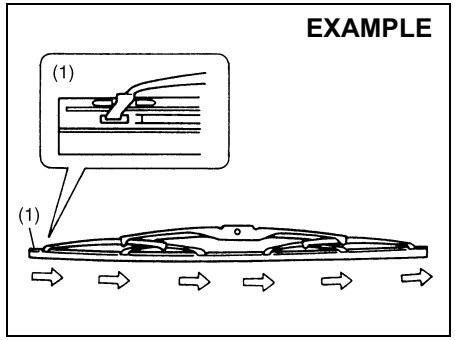

54G132

(1) Locked end

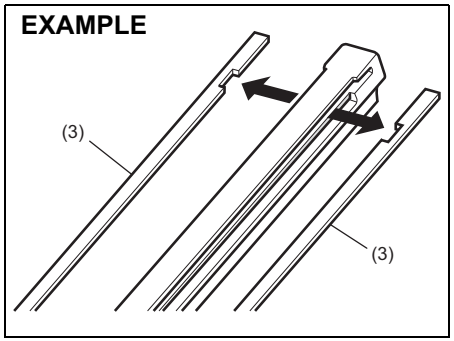

68PH00754

(3) Retainer

4) If the new blade is provided without the two metal retainers, move them from the old blade to the new one.

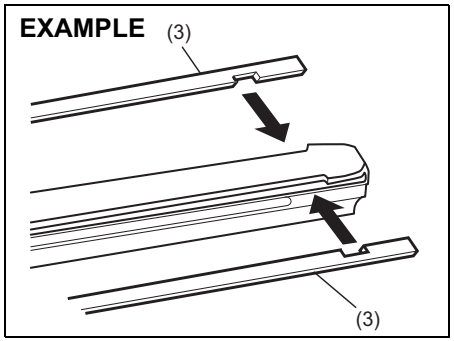

68PH00753

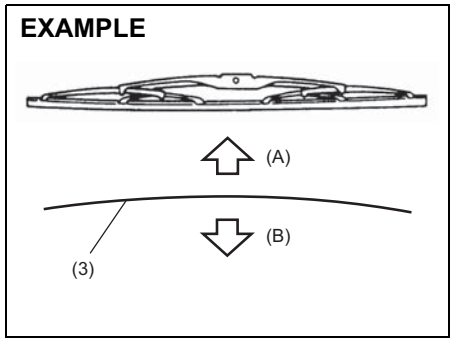

60MH072

(A) Up
(B) Down

NOTE:
When you install the metal retainers (3), make sure the direction of metal retainers as shown in the above illustrations.

5) Install the new blade in the reverse order of removal, with the locked end positioned toward the wiper arm.
   Make sure the blade is properly retained by all the hooks. Lock the blade end into place.
6) Reinstall wiper frame to arm, making sure that the lock lever is snapped securely into the arm.

For rear wipers:

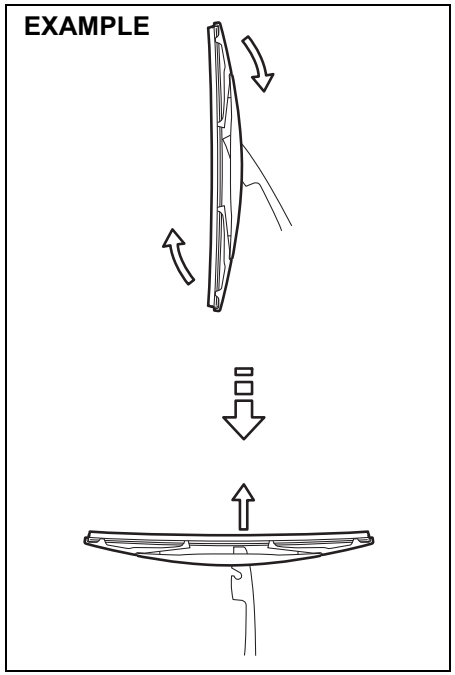

80G146

1) Hold the wiper arm away from the window.
2) Remove the wiper frame from the arm as shown.
3) Slide the blade out as shown.

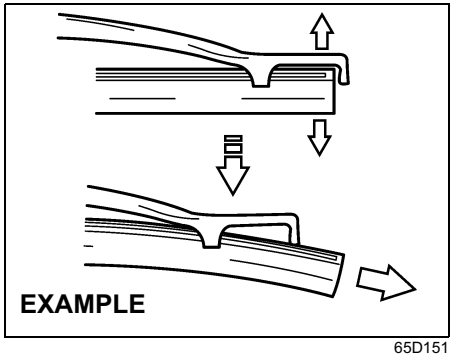

65D151

NOTE:
Do not flex the wiper blade frame end more than necessary. If you do, it can break off.

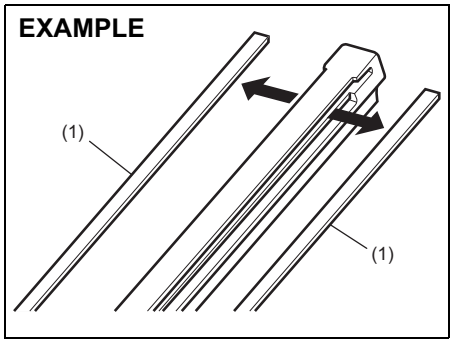

54G135

(1) Retainer

4) If the new blade is provided without the two metal retainers, move them from the old blade to the new one.
5) Install the new blade in the reverse order of removal.
   Make sure the blade is properly retained by all the hooks.
6) Reinstall wiper frame to arm in the reverse order of removal.

Windshield Washer Fluid

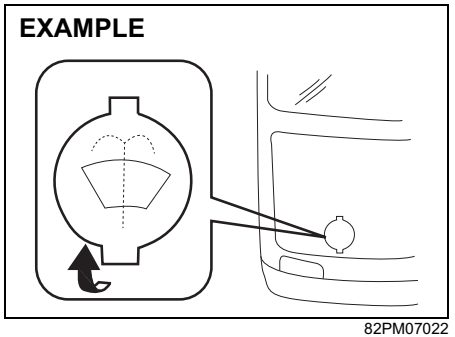

82PM07022

Visually inspect that there is washer fluid in the tank. Refill it if necessary. Use a good quality windshield washer fluid, diluted with water as necessary.

⚠ WARNING

Do not use radiator antifreeze in the windshield washer reservoir. This can severely impair visibility when sprayed on the windshield, and can also damage your vehicle's paint.

NOTICE

Damage may result if the washer motor is operated with no fluid in the washer tank.

Air Conditioning System

If you do not use the air conditioner for a long period, such as during winter, it may not give the best performance when you start using it again. To help maintain optimum performance and durability of your air conditioner, it needs to be run periodically. Operate the air conditioner at least once a month for one minute with the engine idling. This circulates the refrigerant and oil and helps protect the internal components.

Replacement of the Air Conditioner Filter (if equipped)

Since special procedures are required, we recommend you take your vehicle to your authorised Maruti Suzuki workshop for the air conditioner filter replacement.

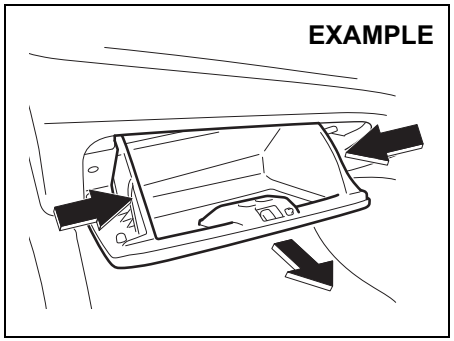

68PH00757

1) To approach the air conditioner filter, press inward on both sides of the glove box, pull it frontward and remove it.

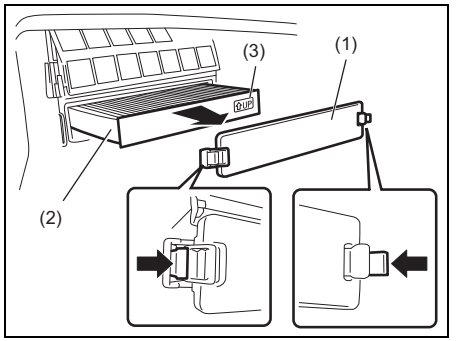

68PH00758

2) Remove the cover (1) and pull out the air conditioner filter (2).

NOTE:
When you install a new filter, make sure the UP mark (3) faces upward.

EMERGENCY SERVICE

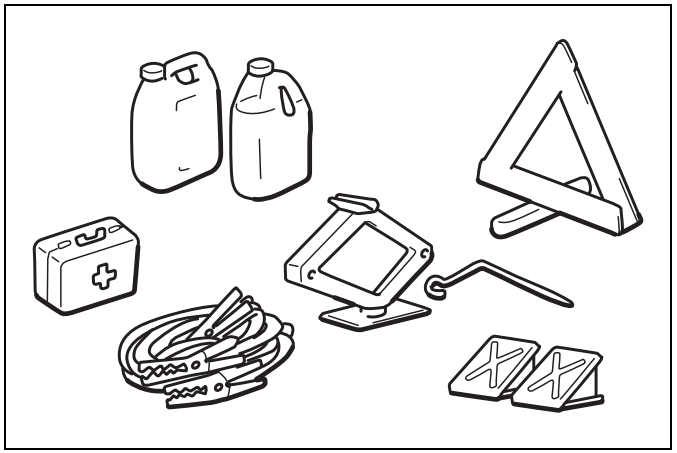

60G411

Tire Changing Tool 8-1
Jacking Instructions 8-2
Jump Starting Instructions 8-5
Towing 8-6
If the Starter Does Not Operate 8-7
If the Engine is Flooded 8-7
If the Engine Overheats 8-8
Warning Triangle 8-9

Tire Changing Tool

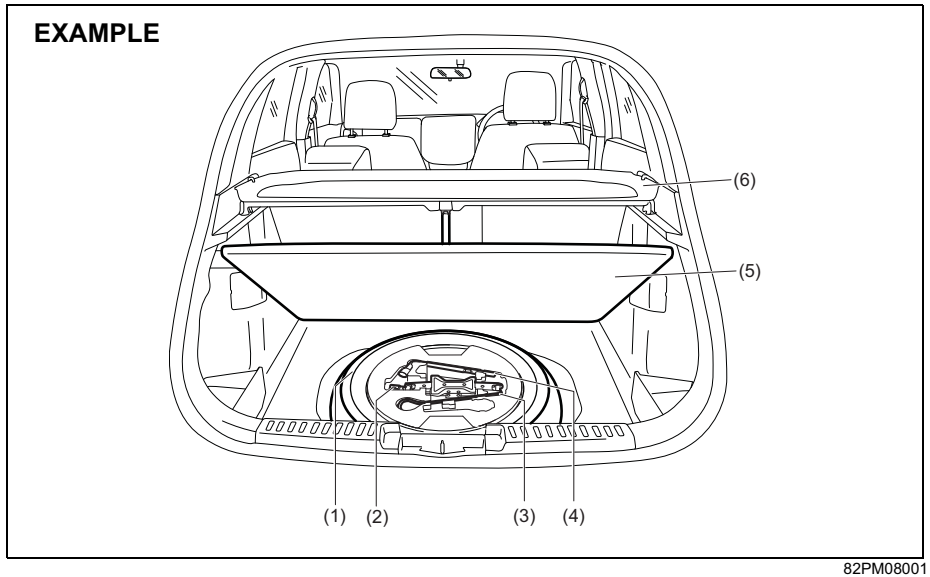

82PM08001

(1) Spare tire
(2) Jack
(3) Jack handle
(4) Wheel Brace
(5) Luggage Compartment Board
(6) Luggage Compartment Tray (if equipped)

The tire changing tools are stowed in the luggage compartment below the luggage compartment board.
Pull the thread of the luggage compartment board upwards.It can be held open as shown in the above illustration, if the vehicle is equipped with luggage compartment board.

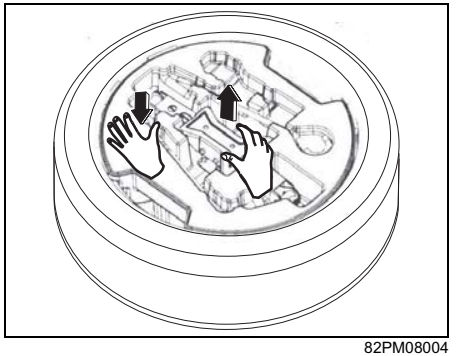

82PM08004

To remove the jack, hold the tire changing tool storage with one hand while pulling the jack from the centre as shown in the above illustration.

⚠ WARNING

After using the tire changing tools, be sure to stow them securely or they can cause injury if an accident occurs.

⚠ CAUTION

The jack should be used only to change wheels. It is important to read the jacking instructions in this section before attempting to use the jack.

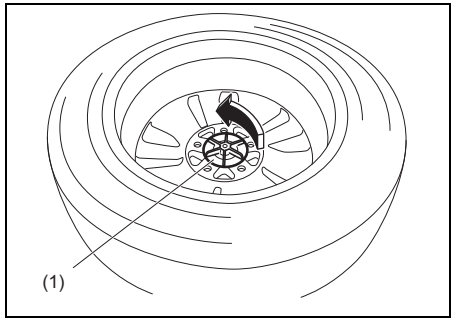

64MS142

To remove the spare tire, turn its holder bolt (1) counterclockwise and remove it.
While replacing alloy wheel make sure to remove the wheel cap before keeping the tire in the trunk.

NOTICE
Be sure that spare tire does not move after tightening the holder bolt

Jacking Instructions

1) Place the vehicle on level, hard ground.
2) Set the parking brake firmly and shift into “R” (Reverse).

⚠ WARNING
• **Be sure to shift into “R” (Reverse) when you jack up the vehicle.** • **Never jack up the vehicle with the transaxle in “N” (Neutral). Otherwise, unstable jack may cause an accident.**

3) Turn on the hazard warning flasher if your vehicle is near traffic.

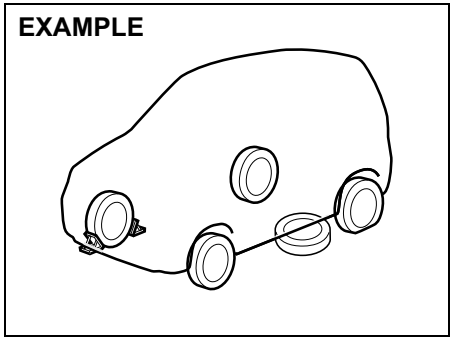

52KM119

4) Block the front and rear of the wheel diagonally opposite of the wheel being lifted.
5) Place the spare wheel near the wheel being lifted as shown in the illustration in case that the jack slips.

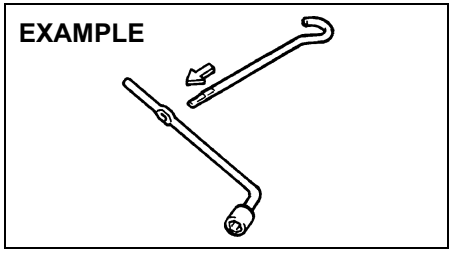

54G253

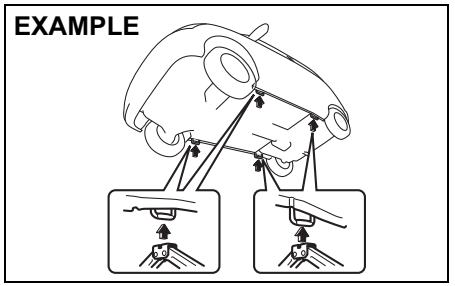

63J100

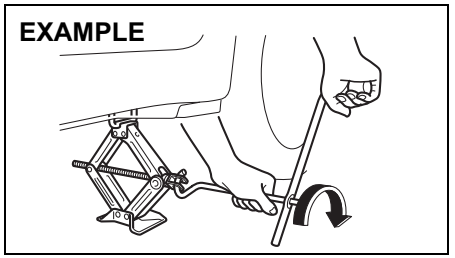

63J101

6) Position the jack vertically and raise the jack by turning the jack handle clockwise until the jack head groove fits around the jacking bar beneath the vehicle body.
7) Continue to raise the jack slowly and smoothly until the tire clears the ground. Do not raise the vehicle more than necessary.

⚠ WARNING

- **Use the jack only to change wheels on level, hard ground.**
- **Never jack up the vehicle on an inclined surface.**
- **Never raise the vehicle with the jack in a location other than the specified jacking point (shown in the illustration) near the wheel to be changed.**
- **Make sure that the jack is raised at least 51 mm (2 inches) before it contacts the flange. Use of the jack when it is within 51 mm (2 inches) of being fully collapsed may result in failure of the jack.**
- **Never get under the vehicle when it is supported by the jack.**
- **Never run the engine when the vehicle is supported by the jack and never allow passengers to remain in the vehicle.**

To Raise the Vehicle with a Garage Jack

- Apply the garage jack to one of the points indicated below.
- Always support the raised vehicle with jack stands (commercially available) at the points indicated below.

Front jacking point for garage jack (1)

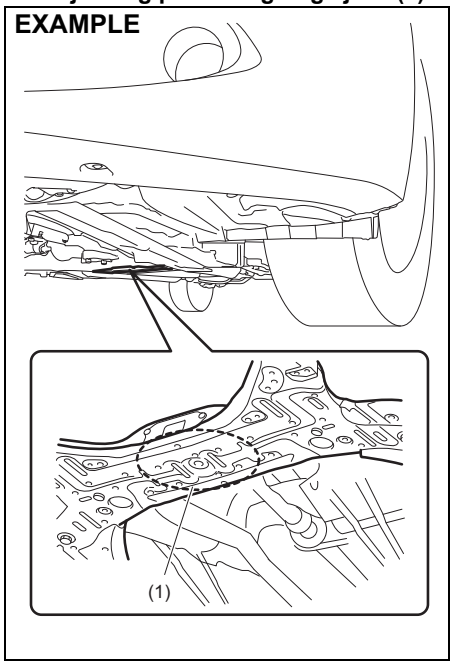

82PM08003

Rear jacking point for garage jack (2)

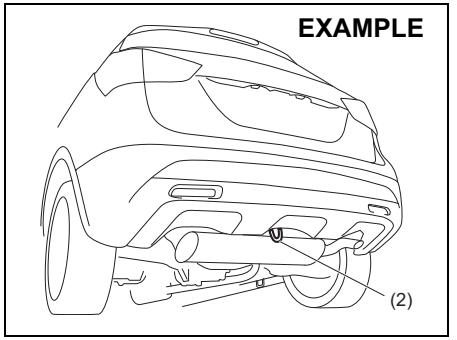

64MS140

Application point for jack stand (3) or two-column lift

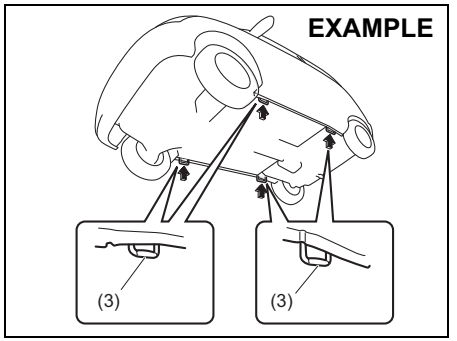

61MM0B103

NOTICE

Never apply a garage jack to the exhaust pipe, side under spoiler (if equipped), engine undercover or rear torsion beam.

NOTE:
For more details, please contact an authorised Maruti Suzuki workshop.

Changing Wheels

To change a wheel, use the following procedure:

1) Remove the jack, tools and spare wheel from the vehicle.
2) Loosen, but do not remove the wheel nut.
3) Jack up the vehicle (follow the jacking instructions in this section).

⚠ WARNING

- **Be sure to shift into "R" (Reverse) when you jack up the vehicle.**
- **Never jack up the vehicle with the transaxle in "N" (Neutral). Otherwise, unstable jack may cause an accident.**

4) Remove the wheel nuts and wheel.

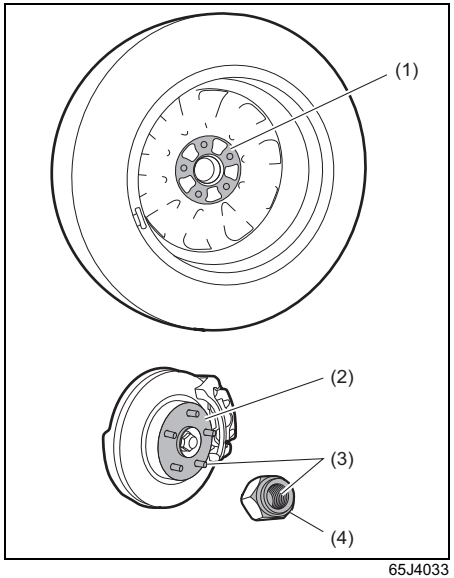

65J4033

5) Before installing the new wheel, clean any mud or dirt off from the surface of the wheel (1), hub (2), thread part (3) and surface of the wheel nuts (4) with a clean cloth. Clean the hub carefully; it may be hot from driving.
6) Install the new wheel and replace the wheel nuts with their cone shaped end facing the wheel. Tighten each nut snugly by hand until the wheel is securely seated on the hub.

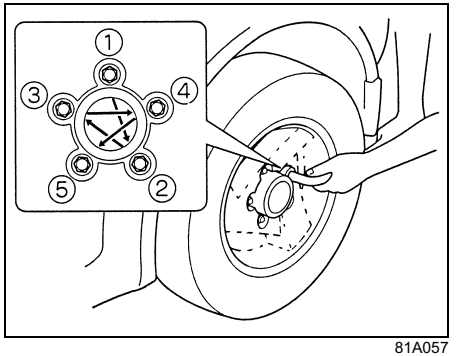

81A057

Tightening torque for wheel nut
100 Nm (10.2 kg-m, 73.8 lb-ft)

7) Lower the jack and fully tighten the nuts in a crisscross fashion with a wrench as shown in the illustration.

⚠ WARNING

Use genuine wheel nuts and tighten them to the specified torque as soon as possible after changing wheels. Incorrect wheel nuts or improperly tightened wheel nuts may come loose or fall off, which can result in an accident. If you do not have a torque wrench, have the wheel nut torque checked by an authorised Maruti Suzuki workshop.

Full Wheel Cover (if equipped)

EXAMPLE

60G309

Insert a piece of cloth between the spokes of the wheel cover and try to pull the cover outward (as shown in figure). Take out the detached wheel cover from the wheel rim. For installation first match the slot at the wheel cover with the air filling nozzle of the wheel. Apply equal pressure at the circumference of the wheel cover to fix it in the wheel rim.

EXAMPLE

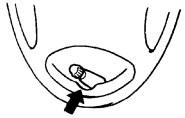

54G117

When installing the cover, make sure that it is positioned so that it does not cover or foul the air valve.

Jump Starting Instructions

⚠ WARNING

- **Never attempt to jump start your vehicle if the battery appears to be frozen. Batteries in this condition may explode or rupture if jump starting is attempted.**
- **When making jump lead connections, be certain that your hands and the jump leads remain clear from pulleys, belts, or fans.**
- **Batteries produce flammable hydrogen gas. Keep flames and sparks away from the battery or an explosion may occur. Never smoke when working in the vicinity of the battery.**
- **If the booster battery you use for jump starting is installed in another vehicle, make sure the two vehicles are not touching each other.**
- **If your battery discharges repeatedly, for no apparent reason, have your vehicle inspected by an authorised Maruti Suzuki workshop.**
- **To avoid harm to yourself or damage to your vehicle or battery, follow the jump starting instructions below precisely and in order.**
  If you are in doubt, call for qualified road service.

NOTICE

Your vehicle should not be started by pushing or towing. This starting method could result in permanent damage to the catalytic converter. Use jump leads to start a vehicle with a weak or flat battery.

When Jump Starting Your Vehicle, Use the Following Procedure:

1) Use only a 12-volt battery to jump start your vehicle. Position the good 12-volt battery close to your vehicle so that the jump leads will reach both batteries. When using a battery installed on another vehicle, DO NOT LET THE VEHICLES TOUCH. Set the parking brakes fully on both vehicles.
2) Turn off all vehicle accessories, except those necessary for safety reasons (for example, headlights or hazard lights).

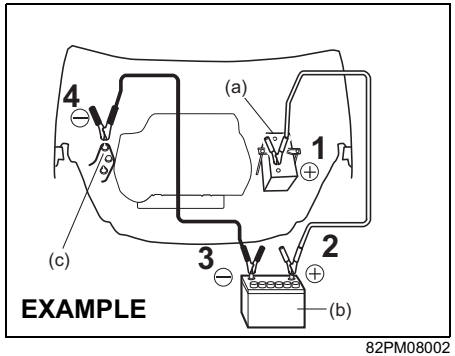

82PM08002

3) Make jump lead connections as follows:
   1. Connect one end of the first jump lead to the positive (+) terminal of the flat battery (a).
   2. Connect the other end to the positive (+) terminal of the booster battery (b).
   3. Connect one end of the second jump lead to the negative (–) terminal of the booster battery (b).
   4. Make the final connection to an unpainted, heavy metal part (i.e. engine mount bracket (c)) of the engine of the vehicle with the flat battery (a).

⚠ WARNING

Never connect the jump lead directly to the negative (–) terminal of the discharged battery, or an explosion may occur.

⚠ CAUTION

Connect the jump lead to the engine mount bracket securely. If the jump lead disconnects from the engine mount bracket because of vibration at the start of the engine, the jump lead could be caught in the drive belts.

4) If the booster battery you are using is fitted to another vehicle, start the engine of the vehicle with the booster battery. Run the engine at moderate speed.
5) Start the engine of the vehicle with the flat battery.
6) Remove the jump leads in the exact reverse order in which you connected them.

Towing

If you need to have your vehicle towed, contact a professional service. Your dealer can provide you with detailed towing instructions.

NOTICE

To help avoid damage to your vehicle during towing, proper equipment and towing procedures must be used.

2-Wheel Drive (2WD) Manual Transaxle

Manual transaxle vehicles may be towed using either of the following methods.

1) From the front, with the front wheels lifted and the rear wheels on the ground. Before towing, make sure that the parking brake is released.
2) From the rear, with the rear wheels lifted and the front wheels on the ground, provided the steering and drivetrain are in operational condition. Before towing, make sure that transaxle is in neutral, the steering wheel is unlocked (vehicle without keyless push start system - the ignition key should be in the “ACC” position) (vehicle with keyless push start system - the ignition mode is ACC), and the steering wheel is secured with a clamping device designed for towing service.

NOTICE
The steering column is not strong enough to withstand shocks transmitted from the front wheels during towing. Always unlock the steering wheel before towing.

If the Starter Does Not Operate

1) Try turning the ignition switch to the “START” position or try pressing the engine switch to change the ignition mode to START with the headlights turned on to determine the battery condition. If the headlights go excessively dim or go off, it usually means that either the battery is flat or the battery terminal contact is poor. Recharge the battery or correct battery terminal contact as necessary.
2) If the headlights remain bright, check the fuses. If the reason for failure of the starter is not obvious, there may be a major electrical problem. Have the vehicle inspected by your authorised Maruti Suzuki workshop.

If the Engine is Flooded

If the engine is flooded with fuel, it may be hard to start. If this happens, press the accelerator pedal all the way to the floor and hold it there while cranking the engine. Do not operate the starter motor for more than 30 seconds.

NOTE:
For keyless push start, if the engine refuses to start, the starter motor automatically stops after a certain period of time. After the starter motor has automatically stopped or there is anything abnormal in the engine starting system, the starter motor runs only while the engine switch is held pressed.

If the Engine Overheats

The engine could overheat temporarily under severe driving conditions. If the high engine coolant temperature warning light comes on as overheating and/or the engine coolant temperature gauge indicates overheating during driving:

1) Turn off the air conditioner, if equipped.
2) Take the vehicle to a safe place and park.
3) Let the engine run at the normal idle speed for a few minutes until the high engine coolant temperature warning light goes off and the indicator is within the normal, acceptable temperature range between “H” and “C”.

⚠ WARNING

If you see or hear escaping steam, stop the vehicle in a safe place and immediately turn off the engine to let it cool. Do not open the hood when steam is present. When the steam can no longer be seen or heard, open the hood to see if the coolant is still boiling. If it is, you must wait until it stops boiling before you proceed.

If the high engine coolant temperature warning light does not go off or the temperature indication does not come down to within the normal, acceptable range:

1) Turn off the engine and check that the water pump belt and pulleys are not damaged or slipping. If any abnormality is found, correct it.
2) Check the coolant level in the reservoir. If it is found to be lower than the “LOW” line, look for leaks at the radiator, water pump, and radiator and heater hoses. If you locate any leaks that may have caused the overheating, do not run the engine until these problems have been corrected.
3) If you do not find a leak, carefully add coolant to the reservoir and then the radiator, if necessary. (Refer to “Engine Coolant” in the “INSPECTION AND MAINTENANCE” section.)

NOTE:
If your engine overheats and you are unsure what to do, contact your authorised Maruti Suzuki workshop.

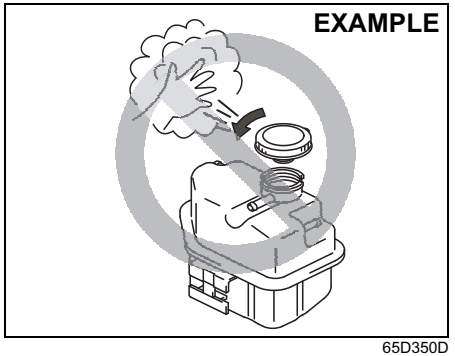

65D350D

⚠ WARNING

- **It is hazardous to remove the degassing tank cap for a diesel engine when the water temperature is high, because scalding fluid and steam may be blown out under pressure. The cap should only be taken off when the coolant temperature has lowered.**
- **To help prevent personal injury, keep hands, tools and clothing away from the engine cooling fan and air-conditioner fan (if equipped). These electric fans can automatically turn on without warning.**

Warning Triangle

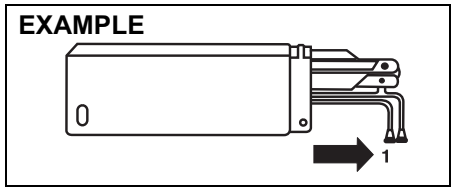

MHO-07-001

In case of vehicle break-down or during emergency stopping, where, your vehicle could become a potential traffic hazard, keep the warning triangle, provided with your vehicle, on the road free from any obstacles behind your vehicle so as to warn the approaching traffic, at an approximate distance of 50-100 m. The reflecting side of the triangle should face the on coming traffic. Please activate the hazard warning lamps before alighting the vehicle to keep the warning triangle.

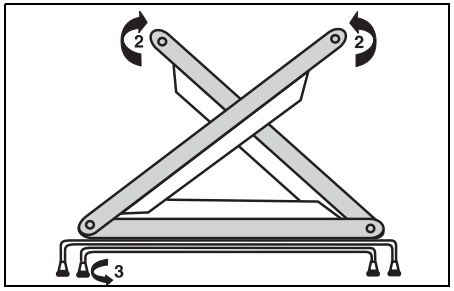

MHO-07-014

- Remove the warning triangle carefully from the cover as shown by arrow 1.
- Open both the reflector arms as shown by arrow and lock the arms with each other with the clip provided in the right arm. Open the bottom stand in counter clock-wise direction as shown by arrow 3. Position the warning triangle behind the vehicle on a plain surface.
- Reverse the removal procedure for keeping inside the cover.

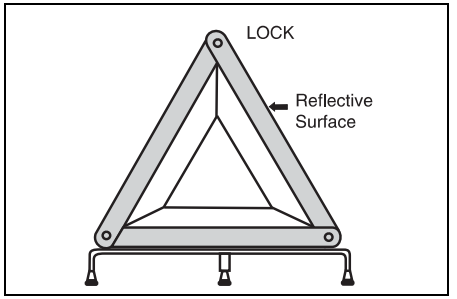

MHO-07-015

APPEARANCE CARE

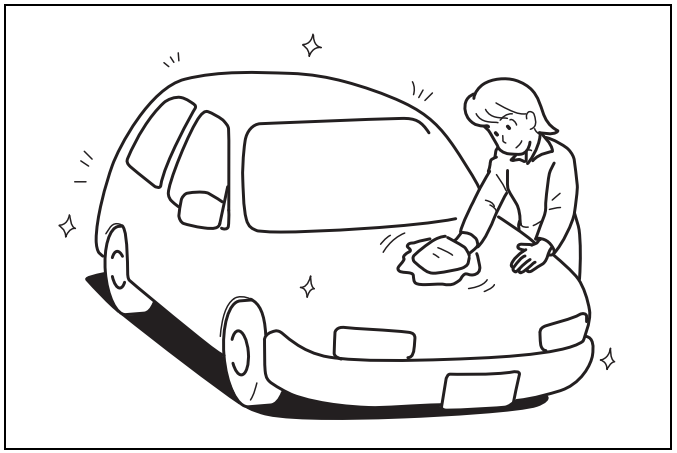

60G412

Corrosion Prevention 9-1
Vehicle Cleaning 9-2

Corrosion Prevention

It is important to take good care of your vehicle to protect it from corrosion. Listed below are instructions for how to maintain your vehicle to prevent corrosion. Please read and follow these instructions carefully.

Important Information About Corrosion

Common causes of corrosion

1) Accumulation of road salt, dirt, moisture, or chemicals in hard-to-reach areas of the vehicle underbody or frame.
2) Chipping, scratches and any damage to treated or painted metal surfaces resulting from minor accidents or abrasion by stones and gravel.

Environmental conditions which accelerate corrosion

1) Road salt, dust control chemicals, sea air or industrial pollution will all accelerate the corrosion of metal.
2) High humidity will increase the rate of corrosion particularly when the temperature range is just above the freezing point.
3) Moisture in certain areas of a vehicle for an extended period of time may promote corrosion even though other body sections may be completely dry.
4) High temperatures will cause an accelerated rate of corrosion to parts of the vehicle which are not well ventilated to permit quick drying.

This information illustrates the necessity of keeping your vehicle (particularly the underbody) as clean and dry as possible. It is equally important to repair any damage to the paint or protective coatings as soon as possible.

How to Help Prevent Corrosion

Wash your vehicle frequently

The best way to preserve the finish on your vehicle and to help avoid corrosion is to keep it clean with frequent washing.
Wash your vehicle at least once during the winter and once immediately after the winter. Keep your vehicle, particularly the underside, as clean and dry as possible.
If you frequently drive on salted roads, your vehicle should be washed at least once a month during the winter. If you live near the ocean, your vehicle should be washed at least once a month throughout the year.

For washing instructions, refer to the “Vehicle Cleaning” section.

Remove foreign material deposits

Foreign material such as salts, chemicals, road oil or tar, tree sap, bird droppings and industrial fall-out may damage the finish of your vehicle if it is left on painted surfaces. Remove these types of deposits as quickly as possible. If these deposits are difficult to wash off, an additional cleaner may be required. Be sure that any cleaner you use is not harmful to painted surfaces and is specifically intended for your purposes. Follow the manufacturer’s directions when using these special cleaners.

Repair finish damage

Carefully examine your vehicle for damage to the painted surfaces. Should you find any chips or scratches in the paint, touch them up immediately to prevent corrosion from starting. If the chips or scratches have gone through to the bare metal, have a qualified body shop make the repair.

Keep passenger and luggage compartments clean

Moisture, dirt or mud can accumulate under the floor mats and may cause corrosion. Occasionally, check under these mats to ensure that this area is clean and dry. More frequent checks are necessary if the vehicle is used off road or in wet weather.
Certain cargos such as chemicals, fertilizers, cleaners, salts, etc. are extremely corrosive by nature. These products should be transported in sealed containers. If a

spill or leak does occur, clean and dry the area immediately.

Store your vehicle in a dry, well-ventilated area
Do not park your vehicle in a damp, poorly ventilated area. If you often wash your vehicle in the garage or if you frequently drive it in when wet, your garage may be damp. The high humidity in the garage may cause or accelerate corrosion. A wet vehicle may corrode even in a heated garage if the ventilation is poor.

⚠ WARNING

Do not apply additional undercoating or rust preventive coating on or around exhaust system components such as the catalytic converter, exhaust pipes, etc. A fire could be started if the undercoating substance becomes overheated.

Vehicle Cleaning

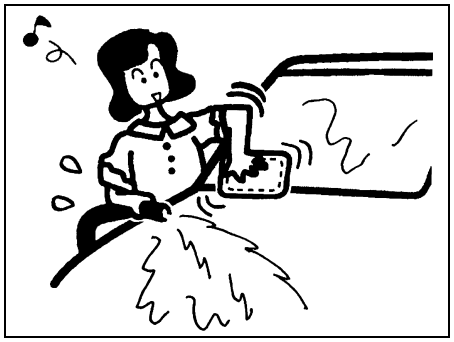

76G044S

⚠ WARNING

When cleaning the interior or exterior of the vehicle, NEVER USE flammable solvents such as lacquer thinners, gasoline, benzene or cleaning materials such as bleaches or strong household detergents. The materials could cause personal injury or damage to the vehicle.

Cleaning the Interior

Vinyl upholstery
Prepare a solution of soap or mild detergent mixed with warm water. Apply the solution to the vinyl with a sponge or soft cloth and let it soak for a few minutes to loosen dirt.
Rub the surface with a clean, damp cloth to remove dirt and the soap solution. If some dirt still remains on the surface, repeat this procedure.

Fabric upholstery
Remove loose dirt with a vacuum cleaner. Using a mild soap solution, rub stained areas with a clean damp cloth. To remove soap, rub the areas again with a cloth dampened with water. Repeat this until the stain is removed, or use a commercial fabric cleaner for tougher stains. If you use a fabric cleaner, carefully follow the manufacturer's instructions and precautions.

Seat belts
Clean seat belts with a mild soap and water. Do not use bleach or dye on the belts. They may weaken the fabric in the belts.

Vinyl floor mats
Ordinary dirt can be removed from vinyl with water or mild soap. Use a brush to help loosen dirt. After the dirt is loosened, rinse the mat thoroughly with water and dry it in the shade.

Carpets
Remove dirt and soil as much as possible with a vacuum cleaner. Using a mild soap solution, rub stained areas with a clean damp cloth. To remove soap, rub the areas again with a cloth dampened with water. Repeat this until the stain is removed, or use a commercial carpet cleaner for tougher stains. If you use a carpet cleaner, carefully follow the manufacturer's instructions and precautions.

Instrument panel and console
Remove loose dirt with a vacuum cleaner. Gently wipe dirt off with a tightly squeezed damp clean cloth. Repeat this until the dirt is removed.

NOTICE

Do not use chemical products that contain silicon to wipe electrical components such as the air conditioning system, audio, navigation system, or other switches. These will cause damage to the components.

Cleaning the Exterior

NOTICE

It is important that your vehicle be kept clean and free from dirt. Failure to keep your vehicle clean may result in fading of the paint or corrosion to various parts of the vehicle body.

Caring for Aluminum Wheels

NOTE:
- *Do not use an acidic or alkaline detergent to wash aluminum wheels. These types of detergent will cause permanent spots, discoloration and cracks on finished surfaces.*
- *Do not use a bristle brush and soap containing an abrasive material. These will damage finished surfaces.*

Washing

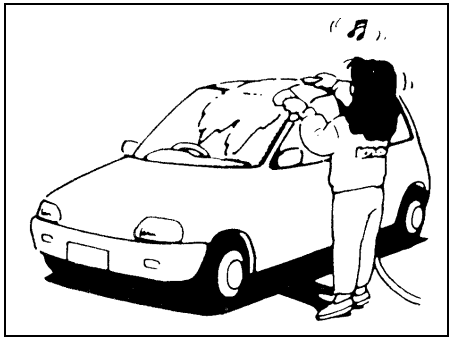

60B212S

⚠ WARNING

- **Never attempt to wash and wax your vehicle with the engine running.**
- **When cleaning the underside of the body and fender, where there may be sharp-edged parts, you should wear gloves and a long-sleeved shirt to protect your hands and arms from being cut.**
- **After washing your vehicle, carefully test the brakes before driving to make sure they have maintained their normal effectiveness.**

⚠ CAUTION

If your vehicle is equipped with the rain-sensing wiper system, place the wiper control lever in the "OFF" position. If the lever is left in the "AUTO" position, the wipers could unexpectedly operate and cause an injury, and could also be damaged.

When washing the vehicle, park it where direct sunlight does not fall on it and follow the instructions below:

1) Flush the underside of body and wheel housings with pressurized water to remove mud and debris. Use plenty of water.

NOTICE

When washing the vehicle:
- **Avoid directing steam or hot water of more than 80°C (176°F) on plastic parts.**
- **To avoid damaging engine components, do not use pressurized water in the engine compartment.**
- **To avoid damaging request switch (if equipped), do not use pressurized water.**

2) Rinse the body to loosen the dirt. Remove dirt and mud from the body exterior with running water. You may use a soft sponge or brush. Do not use hard materials which can scratch the paint or plastic. Remember that the headlight covers or lenses are made of plastic in many cases.

NOTICE

To avoid damage to the paint or plastic surface, do not wipe the dirt off without ample water. Be sure to follow above procedure.

3) Wash the entire exterior with a mild detergent or car wash soap using a sponge or soft cloth. The sponge or cloth should be frequently soaked in the soap solution.

NOTICE

When using a commercial car wash product, observe the cautions specified by the manufacturer. Never use strong household detergents or soaps.

4) Once the dirt has been completely removed, rinse off the detergent with running water.
5) After rinsing, wipe off the vehicle body with a wet chamois or cloth and allow it to dry in the shade.
6) Check carefully for damage to painted surfaces. If there is any damage, touch-up the damage following the procedure below:
   1. Clean all damaged spots and allow them to dry.
   2. Stir the paint and touch-up the damaged spots lightly using a small brush.
   3. Allow the paint to dry completely.

NOTICE

If you use an automatic car wash, make sure that your vehicle's body parts, such as spoilers, cannot be damaged. If you are in doubt, consult the car wash operator for advice.

Waxing

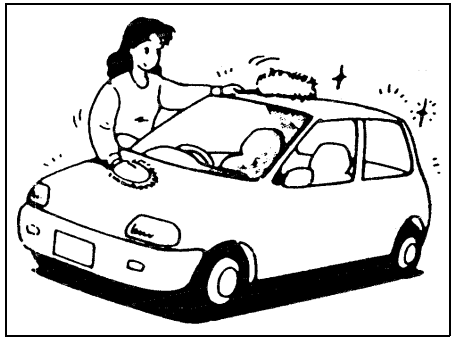

60B211S

After washing the vehicle, waxing and polishing are recommended to further protect and beautify the paint.

- Only use waxes and polishes of good quality.
- When using waxes and polishes, observe the precautions specified by the manufacturers.

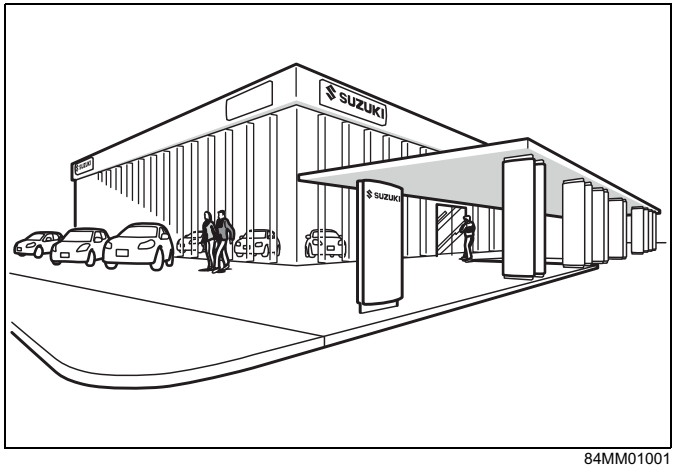

84MM01001

GENERAL INFORMATION

Vehicle Identification 10-1
FASTag (if equipped) 10-1

Vehicle Identification

Chassis Serial Number

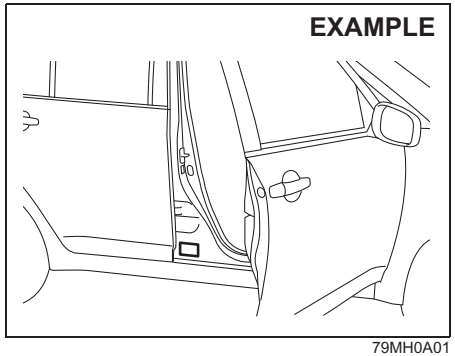

79MH0A01

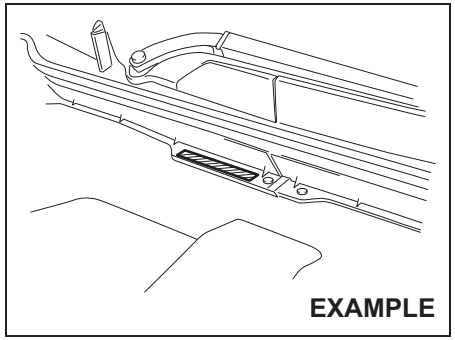

82PM100001

The chassis and/or engine serial numbers are used to register the vehicle. They are also used to assist your dealer when ordering or referring to special service information. Whenever you have occasion to consult your authorised Maruti Suzuki workshop, remember to identify your vehicle with this number. Should you find the number difficult to read, you will also find it on the identification plate.

Engine Serial Number

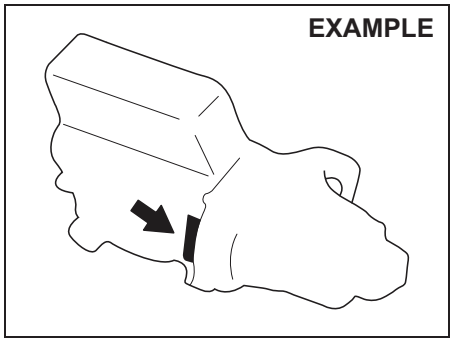

60G128

The engine serial number is stamped on the cylinder block as shown in the illustration.

FASTag (if equipped)

As per Ministry of Road Transport and Highways, the FASTag (1) is mandatory for each vehicle for the purpose of electronic toll collection or any other purpose as may be defined by the Government of India.

In case of any damage to FASTag or replacement of front windscreen, please contact your nearest authorised Maruti Suzuki workshop.

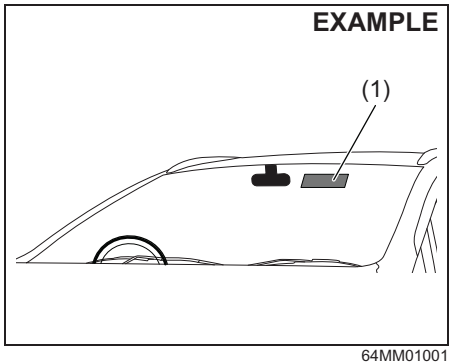

64MM01001

As seen from inside of the vehicle

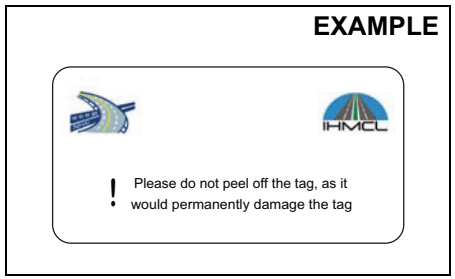

64MM01002

NOTE:
The picture shown is for indicative purpose only. Internal structure of actual device mounted on vehicle may be different.

As seen from outside of the vehicle

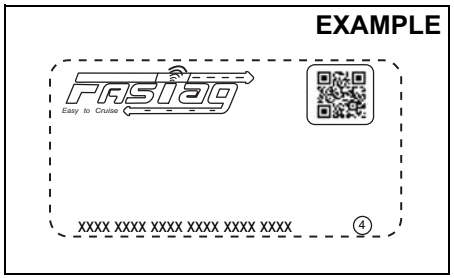

64MM01003

NOTE:
The picture shown is for indicative purpose only. Internal structure of actual device mounted on vehicle may be different.

NOTE:
- *Any attempt to remove the tag from the windscreen will result in permanent damage to the tag.*
- *Use of chemical cleaners to clean the windscreen area where the tag is mounted can damage the tag.*
- *Use of any sharp objects on the tag can damage the tag.*

SPECIFICATIONS

NOTE:
Specifications are subject to change without notice.

ITEM: Dimensions		**UNIT: mm**
Overall length		3995
Overall width		1790
Overall height		1640
Wheelbase		2500
Track	Front	1530
	Rear	1505

ITEM: Mass (weight)		**UNIT: kg**
Curb mass (weight)		1170 - 1195
Gross vehicle mass (weight) rating		1680
Permissible maximum Axle Weight	Front	890
	Rear	870

SPECIFICATIONS

ITEM: Engine	
Type	D13A (DOHC)
Number of cylinders	4
Bore	69.6 mm
Stroke	82.0 mm
Piston displacement	1248 cm^3
Compression ratio	17.6 : 1

ITEM: Electrical	
Battery	DIN50LMF
Fuses	See “INSPECTION AND MAINTENANCE” section.

ITEM: Lights		WATTAGE	BULB No.
Headlight	High beam	12V 55W	H1
	Low beam	12V 55W	H7
Front fog light (if equipped)		12V 24W	PSX24W
Position light		12V 5W	W5W
		LED	–
Turn signal light	Front	12V 21W	PY21W
	Rear	12V 21W	PY21W
Side turn signal light		12V 5W	WY5W
		LED	–
Brake/tail light	Type A	12V 21/5W	P21/5W
Brake light	Type B	12V 21W	P21W
Tail light	Type A	12V 5W	W5W
	Type B	LED	–
High mount stop light		LED	–
Reversing light		12V 16W	W16W
License plate light		12V 5W	W5W
Interior light	Glove box light (if equipped)	12V 1.4W	–
	Footwell light (if equipped)	LED	–
	Vanity mirror light (if equipped)	12V 5W	W5W
	Front (if equipped)	12V 5W	W5W
	Center	12V 10W	–
	Luggage compartment (if equipped)	12V 5W	W5W

ITEM: Wheels and Tires		
Tire size	205/60R16 92H*1, 215/60R16 95H*1	
Rim size	205/60R16 92H tire: 16 × 6J (Steel) 215/60R16 95H tire: 16 × 6 1/2J (Alloy)	
Tire pressures	For the specified tire pressure, see the Tire Information Label located on the driver's door lock pillar.	
Tire size spare/ Rim size spare	For vehicle equipped with 215/60R16	215/60R16*2 (steel wheel)/16 × 6J
	For vehicle equipped with 205/60R16	205/60R16*2 (steel wheel)/16 × 6J

*1: When tire replacement is necessary and if the specified load index and speed rated tire is not available, then use a tire of higher load index and speed rating.

*2: The spare wheel provided with alloy wheel variant is steel wheel rim, hence follow 4 tire rotation only. (Refer: Section "Inspection and maintenance")

ITEM: Recommended Fuel/Lubricants and Capacities (approx.)		
Fuel	See "FUEL RECOMMENDATION" section.	48 L
Engine oil	Classification: ACEA A5/B5 Viscosity: SAE 5W-30	3.2 L (replacement with oil filter)
Engine coolant	See "INSPECTION AND MAINTENANCE" section.	6.5 L (including reservoir tank)
Manual transaxle oil	"MARUTI GENUINE GEAR OIL 75W-80"	2.6 L
Brake fluid / Clutch fluid	MARUTI GENUINE BRAKE FLUID (MGBF) or DOT 3	Refill to the proper oil level according to the instructions in the "INSPECTION AND MAINTENANCE" section.

SERVICE NETWORK (AS ON 01.04.2017)

- **MARUTI SUZUKI AUTHORISED DEALERS (DEALER CODE) :** **SALES, SERVICE, WARRANTY & SPARE PARTS**
- **MARUTI SERVICE MASTER (MSM) :** **SERVICE, WARRANTY & SPARE PARTS**
- **MARUTI SERVICE ZONE (MSZ) :** **SERVICE, WARRANTY & SPARE PARTS**
- **MARUTI AUTHORISED SERVICE STATIONS (MASSs) :**

'A' CATEGORY MASSs (MARKED)**
Free & paid Service, Major repairs & Accidental repairs
'B' CATEGORY MASSs (* MARKED)
Free & paid Service & Major repairs
'C' CATEGORY MASSs (##MARKED)
Free & paid Service & Minor repairs
'D' CATEGORY MASSs (#MARKED)
Free Service & Minor repairs

NOTE : MASSs are not authorised to undertake Warranty jobs. Customers are requested to approach only Maruti Suzuki Authorised Dealers/Maruti Service Master/Maruti Service Zone for Warranty jobs.

REGIONAL OFFICES	AREA COVERED
REGIONAL OFFICE (NORTH-I) MARUTI SUZUKI INDIA LIMITED PLOT NO. 1, NELSON MANDELA ROAD, VASANT KUNJ, NEW DELHI-110070 PH : (011) 46781000, 46150291	WEST UP, UTTARAKHAND, DELHI, GURGAON, FARIDABAD, NOIDA, GHAZIABAD, REWARI, MAHENDRAGARH, NORTH-UP
REGIONAL OFFICE (NORTH-II) MARUTI SUZUKI INDIA LIMITED S.C.O. 39-40, SECTOR 8-C, MADHYA MARG, CHANDIGARH-160008 PH : (0172) 2780057, 2781352, 2540787	PUNJAB, CHANDIGARH, JAMMU & KASHMIR
REGIONAL OFFICE (NORTH-III) MARUTI SUZUKI INDIA LIMITED G.F., B-I BLOCK, PICUP BHAWAN, VIBHUTI KHAND, GOMTI NAGAR, LUCKNOW - 226010 PH : (0522) 2720931-34	PART OF U.P. AND UTTARAKHAND
REGIONAL OFFICE (NORTH-IV) MARUTI SUZUKI INDIA LIMITED S.C.O. 81, FIRST FLOOR, SECTOR 5, PANCHKULA-134109 PH : (0172) 2590056, 2580056	HARYANA, HIMACHAL PRADESH
REGIONAL OFFICE (NORTH-V) MARUTI SUZUKI INDIA LIMITED 7TH FLOOR, POOJA TOWER, 3 GOPALPURA BY-PASS, TONK ROAD, JAIPUR -302018 PH : 0141-5157000, 5118006 / 7	RAJASTHAN

REGIONAL OFFICES	AREA COVERED
REGIONAL OFFICE (EAST-I) MARUTI SUZUKI INDIA LIMITED L & T CHAMBERS, 4TH FLOOR, 16 CAMAC STREET, KOLKATA - 700 017 PH : (033) 22835252-54	WEST BENGAL, SIKKIM, ANDAMAN & NICOBAR
REGIONAL OFFICE (EAST-II) MARUTI SUZUKI INDIA LIMITED 401, 4TH FLOOR, ROHINI APARTMENT, OPPOSITE HOTEL APSARA, 56 CIRCULAR ROAD, NEAR LALPUR CHOWK, RANCHI, JHARKHAND-834001, PH : (0651) 2563931	BIHAR, JHARKHAND
REGIONAL OFFICE (EAST-III) MARUTI SUZUKI INDIA LIMITED 5A, 5TH FLOOR, ABOVE CITY MART SHOPPING MALL, 724, PEACE ENCLAVE, ULUBARI, GUWAHATI – 781 007, ASSAM PH.: (0361) 2734308/ 10/ 11/ 12	ARUNACHAL PRADESH, ASSAM, MANIPUR, MEGHALYA, MIZORAM, NAGALAND, TRIPURA
REGIONAL OFFICE (EAST-IV) MARUTI SUZUKI INDIA LIMITED Office No. 605, 606, 6th Floor, Utkal Signature, Pahal, NH-5, Bhubaneshwar - 752101 (Odisha), Ph: 0674-6751581	ODISHA, CHHATISGARH
REGIONAL OFFICE (WEST-I) MARUTI SUZUKI INDIA LIMITED 602, MADHAVA BLDG., BANDRA KURLA COMPLEX, BANDRA (E), MUMBAI - 400 051 PH : (022) 2659 0165/0286/0290/0291 FAX : 26590285	MUMBAI, NAVI MUMBAI, THANE, RAIGAD, RATNAGIRI, SINDHUDURG & GOA
REGIONAL OFFICE (WEST-II) MARUTI SUZUKI INDIA LIMITED 7TH FLOOR, NORTH BLOCK, SACRED WORLD WANOWARIE, PUNE-411040 PH : (020) 64002641 / 2 / 3 /0 4	REST OF MAHARASHTRA
REGIONAL OFFICE (WEST-III) MARUTI SUZUKI INDIA LIMITED 211, ISKON MALL, ABOVE STAR INDIA BAZAAR, SATELLITE ROAD, AHMEDABAD-380015 PH : (079) 40036660/40036671	GUJARAT , DADRA & NAGAR HAVELI, DAMAN AND DIU
REGIONAL OFFICE (WEST-IV) MARUTI SUZUKI INDIA LIMITED 3RD FLOOR, COMMERCE HOUSE, 7 RACE COURSE ROAD, INDORE-452001 PH : (0731) 4069481, 4069382 FAX : 4069382	MADHYA PRADESH
REGIONAL OFFICE (SOUTH-I) MARUTI SUZUKI INDIA LIMITED 7TH FLOOR, CAPITAL TOWERS, 180, KODAMBAKKAM HIGH ROAD, NUNGAMBAKKAM, CHENNAI - 600 034 PH: (044) 28233050-53 FAX: (044) 28242059	TAMILNADU, PONDICHERRY
REGIONAL OFFICE (SOUTH-II) MARUTI SUZUKI INDIA LIMITED 204, 2ND FLOOR, "EMBASSY CLASSIC", VITTAL MALLYA ROAD, BENGALURU-560001 PH. : (080) 22127384-85, 5112017-18 FAX : (080) 22484841	KARNATAKA
REGIONAL OFFICE (SOUTH-III) MARUTI SUZUKI INDIA LIMITED 2ND FLOOR, TUTUS TOWER, NH-47 BYPASS, PADIVATTOM, COCHIN-682024 PH. : (0484) 4088400	KERALA, LAKSHADWEEP
REGIONAL OFFICE (SOUTH-IV) MARUTI SUZUKI INDIA LIMITED MAHAVIR CHAMBERS, DOOR NO. 3-6-363 & 3-6-1/1, CHAMBER NO. 101 & 102, 1ST FLOOR, LIBERY SQUARE, HIMYATNAGAR, HYDERABAD PH : (040) 66729999	ANDHRA PRADESH, TELANGANA

DETAILS OF AREA OFFICES	
Area Office Location	**A.O Address**
Agra	Maruti Suzuki India Limited, 7th Floor, B-15/8, Shri Vrindavan Tower Sanjay Palace, Agra-282001, Ph. : 0562-4052646, 47
Bhopal	Maruti Suzuki India Limited, 522, 5th Floor, Corporate Zone, Ashima Mall, Hoshangabod Road, Bhopal-462026, Madhya Pradesh, 0755 - 6051555
Calicut	Maruti Suzuki India Limited, 1st Floor, Central Arcade, Bye pass Road, Puthyara Calicut - 673 004, Kerala, +91 495 2723151
Coimbatore	Maruti Suzuki India Limited, A-203, 2nd Floor, Raheja Center, Avinashi Road, Coimbatore – 641018, (0422)-2242109
Dehradun	Maruti Suzuki India Limited, 70 Rajpur Road, Opp Madhuban Hotel, Dehradun - 248001, Uttarakhand, 0135-2740549
Hubli	Maruti Suzuki India Limited, Shiva Avenue, 2nd Floor, Gokul Road, Hubli - 580030, PH : 0836-4259447
Jammu	Maruti Suzuki India Limited, Area Office - N2, Holl No. 116, Fast Flour, A-2, South Block, Bahu Plaza, Jammu (J & K)
Ludhiana	Maruti Suzuki India Limited, Sco No.16/17, 4th Floor , Fortune Chambers, Feroze Gandhi Market, Ludhiana-141001, Punjab, 0161-4649763, 4649765

DETAILS OF AREA OFFICES	
Area Office Location	**A.O Address**
Madurai	Maruti Suzuki India Limited, 3rd Floor, ADR Towers Kalavasal, Theni By-pass Road, Madurai - 625016, Ph.: 0452-4200203
Nagpur	Maruti Suzuki India Limited, Plot No. 244, 1st Floor, Narayani House, Hill Road, Dhasampeth Ext., Nagpur-440010, Ph.: 0712-2225808
Nashik	Maruti Suzuki India Limited, 2nd Floor, Rushiraj Towers, Gargapur Road, Nashik, PH : 0253-6698551,52
Patna	Maruti Suzuki India Limited, 538, AG Plaza, East Boring Canal Road Adj. St Johns School, Patna-800001 (Bihar), PH : 0612-2521145
Raipur	Maruti Suzuki India Limited, 629-630, Magneto Offizo, Magneto Mall, Labhandi, Raipur - 492001 (Chhatisgarh), Ph: 0771-4039643
Surat	Maruti Suzuki India Limited, 304, 3rd Floor, Shivalik Western, Above TGB Restaurant, L.P. Savani Road, Adajan, Surat, Gujarat - 395009
Trivandrum	Maruti Suzuki India Limited, 8th Floor, KEK Tower, Opp. Police Head Quarters, Vazuthacaud, Trivandrum - 695010, PH: 0471-2322336
Visakhapatnam	Maruti Suzuki India Limited, #209, 2nd Floor, Dutt Island, Siripuram Junction, Visakhapatnam - 500003, PH: 0891-3078620

ANDAMAN & NICOBAR

DIGLIPUR

1. AGENCY HOUSE (A & N ISLANDS) PVT. LTD. (PU01-PU-01), MADHUPUR VILLAGE,TEHSIL DIGLIPUR,NORTH ANDAMAN - 744202
PH :03192-271056.

PORTBLAIR

2. AGENCY HOUSE (A & N ISLANDS) PVT. LTD. (E102-E1-02), NAYAGEN, PORTBLAIR - 744101
PH :3192-227104, 211682.
3. AGENCY HOUSE (A & N ISLANDS) PVT. LTD. (E102-E1-01), GARACHRAMA, PORT BLAIR - 744105
PH :3192-251980, 253586, 211590.

RANGAT

4. AGENCY HOUSE (A & N ISLANDS) PVT. LTD. (E102-FJ-03), NIMBUTULLA, PO RANGAT, DIST. MIDDLE ANDMAN, - 744201
PH :3192-211546.

ANDHRA PRADESH

AMALAPURAM

5. S.B. MOTOR CORPORATION (BTS1-BTS-01), #241/2B, BESIDE: BAPUJI PRIMARY SCHOOL MAIN ROAD, OPP. RR NAGAR, BANDARULANKA, AMALAPURAM, EAST GODAVARI (DIST) - 533201
PH :08856-98853173333.

ANAKAPALLE

6. JAYABHERI AUTOMOTIVES PVT LTD (0N01-0N-01), SURVEY NO.822/1 & 2, NH-5 ROAD, ANAKAPALLE, DISTT. VISHAKHAPATNAM. - 531001
PH :08294-7093575555.

ANANTAPUR

7. SRI DURGA AUTOMOBILES (1B01-1B-01), 17/377-A,GOOTY ROAD,,ANANTAPUR - 515001
PH :08554-277958.

BHIMAVARAM

8. NOVELTY REDDY AND REDDY AUTOMOTIVES (7M01-7M-01), NEAR BYEPASS ROAD,UNDI ROAD,BHIMAVARAM - 534202
PH :0881-2765645.

BOBBILI

9. VARUN MOTORS PVT. LTD. (CAM1-CAM-01), D. NO. 4-64, SURVEY NO. 219/8, VILLAGE – MALLAMMAPETA, BESIDE GROWTH CENTRE, BOBBILI, DISTRICT – VIZIANAGARAM, ANDHRA PRADESH. - 535558
PH :08944-9885280772, 9885317344.

CHIRALA

10. JAYALAKSHMI AUTOMOTIVES PVT. LTD. (G502-NT-04), 9-1-92, CHURCH ROAD,CHIRALA, - 523157
PH :8594-9703703353.

CHITTOOR

11. BHARGAVI AUTOMOBILES PVT LTD (A801-1C-03), 22-241/A,KATTAMANCHI TIRUPATI ROAD,CHITTOOR, - 517001
PH :8572-9848144772.

CUDDAPPAH

12. MSA MOTORS (C201-1D-03), K.T. BYE PASS ROAD,CUDDPPAH,ANDHRA PRADESH, - 516001
PH :08562-645427.

ELURU

13. REDDY & REDDY MOTORS (1E01-1E-01), OLD NH-5 ROAD,BESIDES C R REDDY WOMEN'S COLLEFE OLD NH-5,ELURU, - 534001
PH :8812-221826.

GUDIVADA

14. VARUN MOTORS PVT. LTD. (2603-CL-02), D NO. 1-621,AUTONAGER 1ST LANE,GUDIVADA - 521301
PH :08674-246244, +919885651383.

GUDUR

15. BHARGAVI AUTOMOTIBILES PVT. LTD. (IS01-IS-01), SURVEY NO.1619/3A,GUDUR BYPASS, GUDUR RURAL, GUDUR DISTT. NELLORE, A.P. - 524101
PH :8624-252509.

GUNTUR

16. JAYALAKSHMI AUTOMOTIVES PVT. LTD. (G502-G5-01), D-N-8-24-31,MANGALAGIRI ROAD,GUNTUR - 522001
PH :0863-2241000.

HINDUPUR

17. SRI DURGA AUTOMOTIVES (1B01-36-02), PLOT NO.83, NEAR RELIANCE PETROL BUNK, BYE PASS ROAD, HINDUPUR - 515201
PH :8554 -277958.

HYDERABAD

18. ADARSHA AUTOMOTIVES PVT. LTD. (1014-10-02), H. NO. 8-64/1, RUDRA COLONY, SHAMSHABAD, HYDERABAD. - 501218
PH :040-8142346633, 9985326633.

JAGGAIAHPETA

19. VARUN MOTORS PVT. LTD. (2603-PC-05), DOOR NO. 2-20, MUTHYALAMMA GUDI STREET JAGGAIAHPET TOWN, JAGGAIAHPET, KRISHNA DISTT. - 521175
PH :8652-281555.

JANGAREDDYGUDEM

20. REDDY & REDDY MOTORS (1E01-HQ-02), NEAR R&B GUEST HOUSE,ELURU ROAD,JANGAREDDYGUDEM, - 534447
PH :8821-9948829555.

KAKINADA

21. S B MOTORS (W701-W7-01), D. NO. 52-10-36/3,NEAR AMAR GHATI CENTER,KARAPA ROAD, KAKINADA - 533001
PH :884-2352785.

KAVALI

22. BHARGAVI AUTOMOBILES PVT LTD (A801-PF-05), KAVALI NELLORE,ANDHRA PRADESH - 524201
PH :8626-9248702567.

KOTHEQUDAM

23. VARUN MOTORS PVT. LTD. (2603-HF-04), DOOR NO. 5-35/4/B,LAKSHMIDAVI PALLI,BHADRACHALAM ROAD, KOTTHAGUDEM - 507101
PH :0253-2351277/79.

KURNOOL

24. MSA MOTORS (C201-C2-01), AUTO NAGAR,INDUSTRIAL ESTATE, NH-7, KURNOOL - 518004
PH :08518-254040, 251616.

MACHILIPATNAM

25. MITHRA AUTO AGENCIES PVT LTD (2604-0K-04), NARASIMHA NAGAR, MACHLIPATNAM, ANDHRA PRADESH - 521001
PH :8672-9848988312.

MADANAPALLI

26. BHARGAVI AUTOMOBILES PVT LIMITED (AAT1-AAT-01), SURVEY NO.762, BASIKONDA VILLAGE, MADANPALLI, CHITTOOR DISTT. ANDHRA PRADESH - 524101
PH :8624-252509.

MADHURAWADA

27. JAYABHERI AUTOMOTIVES PVT LTD (BQQ1-BQQ-01), PLOT NO. 5, SURVEY NO. 4/P, KOMMADI ROAD, MADHURAWADA, VISHAKAPATNAM, ANDHRA PRADESH - 530048
PH :0891-9849445639.

MARKAPURAM

28. JAYALAKSHMI AUTOMOTIVES PVT. LTD. (CFF1-CFF-01), D. NO. 4-515/12, SURVEY NO. 1167, OPP. INDUSTRIAL ESTATE, ONGOLE ROAD, MARKAPURAM, DISRT.-PRAKASAM, ANDHRA PRADESH. - 523316
PH :8596-9848131133.

NARASARAOPET

29. JAYALAKSHMI AUTOMOTIVES PVT. LTD. (G502-JT-03), NEAR RELIANCE PETROL PUMP BUNK,VINUKONDA ROAD, NARASAROAPET, GUNTUR, - 522603
PH :8647-9866844344.

NARSIPATNAM

30. JAYABHERI AUTOMOTIVES PVT. LTD. (WT01-WT-01), OPP. RDO BUNGLAW, BANK COLONY, VISAKHAPATNAM ROAD, NARSIPATNAM - 531116
PH :958932-225111/226111.

NELLORE

31. BHARGAVI AUTOMOBILES PVT LTD (A801-A8-01), D.NO.25/II/97 INDUSTRIAL ESTATE, A.K. NAGAR, P.B.NO.18, NELLORE(A.P.) - 524004
PH :0861-326226, 329927.
32. BHARGAVI AUTOMOBILES PVT LTD (A801-A8-04), A2, INDUSTRIAL ESTATE,A.K. NAGAR,NELLORE, - 524004
PH :861-6457369.

NUZVID

33. VARUN MOTORS PVT. LTD. (2603-CN-03), BESIDE R T C BUS DEPOT.,OLD D M OFFICE,VIJAYAWADA ROAD, NIZVID - 521201
PH :0866-2544444, 9885706800.

ONGOLE

34. JAYALAKSHMI AUTOMOTIVES (8Y01-8Y-02), THROVAGUNTA COMPANY CENTRE,NH-5,GUNTUR ROAD,ONGOLE,PRAKASAM DISTRICT. - 523003
PH :8592-247167.

PALASA

35. JAYABHERI AUTOMOTIVES PVT. LTD. (BWH1-BWH-01), SURVEY NO. 63 OF VILLAGE – PURUSHOTTAPURAM, PALASA MANDAL, KASIBUGGA MUNICIPALITY, DISTRICT – SRIKAKULAM, ANDHRA PRADESH. - 532221
PH :08945-9849054442.

PENDURTHI

36. VARUN MOTORS PVT. LTD. (BAP1-BAP-01), SURVEY NO.107/1B, VELAMPETA, ANAKAPALLI TO PENDURTHI HIGHWAY, NEAR BRIDGE, PENDURTHI DISTT: VISAKAPATNAM - 530047
PH :0891-9885006651.

RAJAHMUNDRY

37. S.B. MOTOR CORPORATION (C501-C5-01), OPP.FCI GOWDOWN,JAILROAD,LALACHERUVLI,RAJAMUNDRY - 533101
PH :0883-72410, 60249.

RAJAM

38. VARUN MOTORS PVT. LTD. (BLJ1-BLJ-01), PLOT NO. 44, SARATHI NAGAR, RAJAMNAGAR PANCHAYAT, RAJAM, DISTRICT - SRIKAKULAM, ANDHRA PRADESH - 532127
PH :08941-9703101166.

SRIKAKULAM

39. VARUN MOTORS PVT. LTD. (4603-W6-09), PEDDA PADDU ROAD,ARASAVILLI (P.O.),SRIKAKULAM, - 532001
PH :08942-220830.

SURYAPET

40. PAVAN MOTORS PVT. LTD (BLC1-BLC-01), SURVEY NO. 493, THALLAGADDA, SURYAPET MANDAL, NALGONDA DISTRICT, ANDHRA PRADESH. - 508213
PH :8684-8008899995, 27502750.

TANUKU

41. NOVELTY REDDY & REDDY PVT LTD (BAR2-BAR-01), NH-5 ROAD, NEAR WOMEN'S COLLEGE, BESIDE IOC PETROL PUMP, TANUKU, DISTT: WEST GODAVARI(ANDHRA PRADESH) - 534211
PH :08819-9951440444.

TENALI

42. JAYALAKSHMI AUTOMOTIVES (PE01-PE-01), KAVI RAJA NAGAR, GUNTUR ROAD, TENALI, GUNTUR DISTT. - 522002
PH :8644-226100,227100.

TIRUPATI

43. KOUNDINYA ENTERPRISES (N981-N9-01), 18-3-60,KT BY PASS ROAD,,TIRUPATI
PH :0877- 2233051, 2231047.
44. BHARGAVI AUTOMOBILES PVT LTD (A801-N9-02), 11/66/1,TIRUPATI RENIGUNTA ROAD,TIRUPATI, - 517507
PH :877-64591111.

TUNI

45. SATTIBABU MOTORS (PVT) LTD. (KY01-KY-01), D. NO. 65-31-15/1, OPP. FCI GODOWNS, NARAYANAPURAM, TUNI, EAST GODAVARI, ANDHRA PRADESH - 533401
PH :08854-7661893888.

VIJAYAWADA

46. MITHRA AUTO AGENCIES PVT LTD (2604-26-01), 40-17-3,,PICHAIAH STREET,GANDHI COLONY,VIJAYAWADA - 520001
PH :0866-632283, 633068.
47. VARUN MOTORS PVT. LTD. (2603-26-01), 48-17-4/1,RING ROAD,VIJAYAWADA - 520008
PH :0866-2545053.
48. VARUN MOTORS PVT. LTD. (2603-26-06), SURVEY NO.561/1, 562/5 & 561/3, 562/6 KESARAPALLY,VIJAYAWADA, KRISHNA DISTRICT, A.P. - 521102
PH :866-9885382444.
49. SANTOSH AUTOMOTORS PVT. LTD. (2607-26-01), SURVEY NO. 223/5, D. NO. 11-61/2, KANURU PANCHAYAT, PENAMALURU MANDAL, VIJAYAWADA, KRISHNA DISTRICT, ANDHRA PRADESH. - 520010
PH :0866-7799787969, 2552262.

VISAKHAPATNAM

50. JAYABHERI AUTOMOTIVES PVT. LTD. (4606-46-03), SURVEY NO. 119/6, KURMANNAPALEM, GAJUWAKA MANDAL, VIZAG, ANDHRA PRADESH. - 530046
PH :0891-2514919, 9849445639.
51. VARUN MOTORS PVT. LTD. (4603-46-08), DOOR NO. 58/2,BLOCK NO. 5,BALAJI NAGAR, OPP. ANDHRA UNIVERSITY, SIRIPURAM - 580003
PH :0891-2525885.
52. VARUN MOTORS PVT. LTD. (4603-46-0E), PLOT NO 88,BESIDES POLICE STATION,SRINAGAR,GAJUWAKA - 530026
PH :0891-2513157.
53. VARUN MOTORS PVT. LTD. (4603-46-0F), D-25, INDUSTRIAL ESTATE, MARRIPALLEM, BESIDES COLA MANCHU KONDA GARDENS, VISAKHAPATNAM., - 530007
PH :0891-2705375.
54. JAYABHERI AUTOMOTIVES PVT. LTD. (4606-46-01), PLOT NO. A-9, INDUSTRIAL ESTATE, VISHAKAPATANAM, ANDHRA PRADESH - 530018
PH :0891-2506837.
55. JAYABHERI AUTOMOTIVES PVT. LTD. (4606-46-02), D.NO:51-17-2 , NH-5, KRANTHINAGAR, VISAKHAPATNAM,(ANDHRA PRADESH). - 530013
PH :0891- 7799772272.
56. VARUN MOTORS PVT. LTD. (4607-46-01), S. NO. 8, KAPPARADA VILLAGE, BESIDE IOCL PETROL BUNK, MANCHUKONDA GARDENS, MURALI NAGAR, NATIONAL HIGHWAY, VISHAKAPATNAM. - 530007
PH :0891-9885313744.
57. VARUN MOTORS PVT. LTD. (4603-46-0K), SURVEY NO. 394 & 395, PLOT NO. 7 AT VILLAGE – DUPPITURU, MANDAL – ACHUTAPURAM, DISTRICT – VISHAKAPATNAM, ANDHRA PRADESH. - 531011
PH :3055550.

VIZAINAGARAM

58. VARUN MOTORS PVT. LTD. (4603-N8-0C), OPPOSITE SUN SCHOOL, 100 FEET RING ROAD, VIZIANAGARAM, VIZIANAGARAM - 535001
PH :8922-7799666998.

VIZIANAGARAM

59. JAYABHERI AUTOMOTIVES (N801-N8-01), PLOT NO.B-1,DOOR NO.8-32-1,SURVEY NO.108/12A & 109/2A, INDUSTRIAL ESTATE, VANTITHADI AGRAHARAM VILLAGE, VIZIANAGARAM, ANDHRA PRADESH - 535001
PH :08922 -255366,255377,8008333232.

ARUNACHAL PRADESH

ITANAGAR

60. HIBRO AUTOMOBILES (7581-75-01), D-SECTOR, DISTT: PAPUMPARE, ITANAGAR
PH :0360-2212843.
61. BUISHI YADA MOTORS (7501-75-01), A' SECTOR, NAHARLAGUN, ARUNACHAL PRADESH. - 791110
PH :0360-245113, 245114.
62. BUISHI YADA MOTORS (7501-75-02), NH-52A, BANDERDEWA PAPUMPARA (DISTT), ARUNACHAL PRADESH, ITANAGAR - 791123
PH :0360-266382.
63. BUISHI YADA MOTORS (7501-75-04), MODEL VILLAGE, BEFORE GOVERNMENT HIGHER SECONDARY SCHOOL, NAHARLAGUN, ITANAGAR - 791110
PH :9436041437.

PASSIGHAT

64. BUISHI YADA MOTORS (7501-8A-03), PASSI GHAT BAZAR, PASSIGHAT, ARUNACHAL PRADESH - 791102
PH :368-9435082651/2224748.

ASSAM

BAIHATA CHARIALI

65. PALLAVI MOTORS (P) LTD (BNL1-BNL-01), DAG NO. 1042, PATTA NO. 17, MOUZA – BORBANKHAR, P.S. – BAIHATA CHARIALI, DISTRICT – KAMRUP, ASSAM - 781381
PH :361-9864052488.

BARPETA

66. ROY AUTO ENGINEERING WORKS (7Z81-7Z-01), POST OFFICE, BARPETA ROAD, MAIN ROAD , WARD NO.-4, ASSAM
PH :03666-260343,262743.
67. BHARTI MOTORS (P) LTD (7N01-7Z-02), SIMULGURI,NH-31,DISTRICT-BARPETA, ASSAM - 781313
PH :366-6260416.

BIJOYNAGAR

68. PODDAR CAR WORLD (IA01-IA-01), AT/PO - BIJOYNAGAR, INDIAN OIL PETROL PUMP, KAMRUP DIST.,BIJOYNAGAR - 781125
PH :3623-9854120396.

BOKAKHAT

69. ANAMIKA MOTORS (BTP1-BTP-01), OPP. JDSG COLLEGE, NH-37, A.T. ROAD, WARD NO.-1, BOKAKHAT DISTT. GOLAGHAT (ASSAM) - 786512
PH :03774-9435050938.

BONGAIGAON

70. BHARTI MOTORS (P) LTD (7N01-7N-01), CHAPAGURI ROAD, BONGAIGAON - 7833830
PH :3664-099541-56179/231580/9859978958.

DHEKIAJULI

71. RAMLAL DURGADUTT MOTORS PVT LTD (BRX1-BRX-01), DAG NO.242, K.P. PATTA NO.88, VILLAGE-BHAKUAMARI, MOUZA-BORCHOLA, BESIDES-NH15, DHEKIAJULI, DISTT. SONITPUR, ASSAM. - 784110
PH :0361-9854258025.

DHEMAJI

72. SAIKIA AUTO PVT. LTD. (7P01-UD-02), NALANIPAM KONCH GAON,NH-52,DHEMAJI (ASSAM) - 787057
PH :3752-9957837538.

DIBRUGARH

73. JAY BEE AUTO AGENCIES PVT. LTD. (C101-C1-01), CHIRING CHAPARI, T.R. PHUKAN ROAD, P.O. DIBRUGARH (ASSAM) - 786001
PH :0373-2321018, 2329314.

DIGBOI

74. VISHAL CAR WORLD PVT. LTD. (BYD1-BYD-01), BORBIL NO. 1, NEAR LIONS CLUB, NH-38, P.O. – DIGBOI, DISTRICT – TINSUKIA , ASSAM. - 786171
PH :3751-9435860000..

DULIAJAN

75. B.S. MOTORS (X881-X8-01), NO. 01, BORPOTHAR TINALI, DULIAJAN.
PH :0374-2801255.
76. JAY BEE AUTO AGENCIES PVT. LTD. (ADA1-ADA-01), JAYBEE AUTO AGENCIES, TIPLING TINIALI, DULIAJAN DIST. DIBRUGARH - 786602
PH :0374-8811098576.

GOALPARA

77. BHARATI MOTORS PVT. LTD. (YN01-YN-01), PO: KALYANPUR, VILLAGE: SOLMARI, P/S: AGIA, NH: 37, DISTRICT: GOALPARA, ASSAM - 781301
PH :8761985554.

GOLAGHAT

78. ANAMIKA MOTORS (J302-J3-01), N.H.-39, RANGAJAN, PO: MORANGI, DIST- GOLAGHAT - 785621
PH :03772-360901, 360947.

GUWAHATI

79. BIMAL AUTO AGENCY (0901-09-01), JHALUKBARI, GUWAHATI. - 781014
PH :0361-670335, 570137.
80. BIMAL AUTO AGENCY (0903-09-01), CHANDMARI, BAMUNI MAIDAN, OPP SBI NEW GUWAHATI BRANCH, GUWAHATI - 781021
PH :0361-98645025045/46.
81. PALLAVI MOTORS (P) LTD (0902-09-01), DAG NO. 1&2,NEXT TO DEPTT. OF FAMILY WELFARE,SIX MILE. KHANAPARA G.S. ROAD, GUWAHATI - 781022
PH :361-2363191/92/93, 2360149, 2368980, 2360233.
82. PODDAR CAR WORLD PVT LTD (0904-09-01), HENGRABARI ,VIP ROAD,GUWAHATI - 781036
PH :0361-2334969, 71, 2334975.
83. BIMAL AUTO AGENCY (0901-09-02), BEHARBARI,BEHIND DHOOM RESTAURANT, NH-37,GUWAHATI - 781028
PH :0361-8486002903/902.
84. BIMAL AUTO AGENCY (0903-09-03), BESIDE NRL PETROL PUMP, RGB ROAD, ZOO ROAD, GUWAHATI, ASSAM - 781005
PH :0361-2207322/9854057190.
85. MITTAL AUTOZONE (0906-09-01), NH-37, LALMATI, NEAR BHARAT PETROLIUM, GUWAHATI, ASSAM. - 781029
PH :0361-2309951.
86. MITTAL AUTOZONE (0906-09-02), NH-37, BELTOLA, NEAR HANUMAN KANTA, GUWAHATI - 781028
PH :0361-9864296666.
87. PALLAVI MOTORS (P) LTD (0902-09-02), DAG NO. 2201, PATTA NO. 237, VILLAGE – JYOTIKUCHI, MOUZA – BELTOLA, AK AZAD ROAD, GUWAHATI, DISTRICT – KAMRUP, ASSAM. - 781034
PH :9864052488.
88. PODDAR CAR WORLD (0905-09-01), NH-37, NEAR, GORCHUK CHAIRALI, GUWAHATI (ASSAM). - 781029
PH :0361-7101714 , 9435555853.
89. BIMAL AUTO AGENCY (0901-09-03), AECB ROAD, MAJHAR GALI, ROOP NAGAR, ULUBARI, GUWAHATI, ASSAM - 781007
PH :0361-9864074525.

HOJAI

90. RAMLAL DURGADUTT MOTORS PVT LTD (ARA1-ARA-01), KHATIYAN NO.: 312/3F, HOJAI MAIN ROAD, NEAR UCO BANK, SHANKARDEVNAGAR, HOJAI, DISTRICT – NAGAON , ASSAM - 782435
PH :03674-9707556868.

JAGI ROAD

91. RAMLAL DURGADUTT MOTORS PVT LTD (7J01-RB-02), JAGIROAD,MORIGAON,NALAOW,ASSAM - 782410
PH :03678-9435569526.

JORHAT

92. ANAMIKA MOTORS (G901-G9-01), GARALI ROAD, RAJABARIE, JORHAT, ASSAM. - 785001
PH :0376-360901, 360947.

KARIMGANJ

93. JAIN UDYOG (6901-1S-04), STEAMER GHAT ROAD, KARIMGANJ, ASSAM - 788710
PH :3843-262084.

KHATKHATI

94. PODDAR CAR WORLD PVT. LTD. (CAZ1-CAZ-01), NEAR TELEPHONE EXCHANGE, NH-39, KHATKHATI, DISTRICT – KARBI ANGLONG . - 782460
PH :9706010366.

MANGALDOI

95. PODDAR CAR WORLD (YW01-YW-01), PUNIA, NH-52, MANGALDOI, DISTT. DARRANG - 784115
PH :0361- 9707152711.

MARGHERITA

96. VISHAL CAR WORLD PVT. LTD. (YR01-YR-01), MARGERITA TOWN, BEHIND IOCL PETROL PUMP, NH-38, MARGHERITA, ASSAM - 786181
PH :03751-220011.

NAGAON

97. RAMLAL DURGADUTT MOTORS PVT LTD (7J01-7J-01), KHUTIKHATIA, HAIBARGON, NAGAON - 782002
PH :0372-236111.

NALBARI

98. BIMAL AUTO AGENCY (9201-92-01), CHOWKBAZAR, NALBARI HAJO ROAD, NALBARI DIST. NALBARI - 781335
PH :0364-220031.

NORTH LAKHIMPUR

99. SAIKIA AUTO PVT. LTD. (7P01-7P-01), HATILUNG, NH-52 ROAD, NORTH LAKHIMPUR, ASSAM - 787031
PH :3752-232272,232450.
100. SAIKIA AUTO PVT. LTD. (7P01-7P-03), KHELMATI, WARD NO. 14, NH -52, NORTH LAKHIMPUR, ASSAM - 787001
PH :03752-232272.

RANGIA

101. PODDAR CAR WORLD PVT. LTD. (6X01-6X-01), RANGIA TOWN, WARD NO. 5, SHANTIPUR, BHUTAN ROAD, NEAR POLYCLINIC HOSPITAL, RANGIA DISTT. KAMRUP (ASSAM) - 781354
PH :0361-9707015958.

SIBSAGAR

102. ANAMIKA MOTORS (G901-L9-02), CHEREKAPAR, B.G. ROAD, NEAR HOLY NAME SCHOOL, SIBSAGAR. - 785640
PH :03772-272231, 272251.

SILCHAR

103. JAIN UDYOG (6901-J2-02), KAUSHAL COMPLEX, SONAI ROAD, SILCHAR, ASSAM - 788006
PH :03842-26061, 62.

SONAPUR

104. BIMAL AUTO AGENCY (AAQ1-AAQ-01), TEPESIA TINIALI, NH-37, SONAPUR, DIST- KAMRUP, ASSAM.
PH :9435101175.

TEZPUR

105. RAMLAL DURGADUTT MOTORS PVT LTD (T102-T1-01), NEAR DON BASCO SCHOOL, P.O. NIKAMULSATRA, TEZPUR, ASSAM - 784154
PH :0361- 8724087940.

TINSUKIA

106. VISHAL CAR WORLD (J401-J4-01), LAIPULY, A.T. ROAD, TINSUKIA, DIST - TINSUKIA, ASSAM - 786183
PH :0374-2312572.

BIHAR

ARARIA

107. SEEMANCHAL MOTORS PVT. LTD. (O701-O7-01), NEAR BUS STAND, JAGDISH RICE MILL COMPOUND, HOSPITAL ROAD, FORBESGANJ, DISTT. ARRARIA, BIHAR - 854318
PH :06455-8797096012/7545830002.

ARRAH

108. PEARL CARS (VU01-VU-01), (A UNIT OF VINDHYAVASINI AUTOMOBILES PVT. LTD.), DHANUPRA, NEAR GANPAT CHOUDHARY DWAR, NH-30, ARRAH (BIHAR) - 802301
PH :6182-9304685888.

BEGUSARAI

109. G S MOTORS (1U01-1U-01), HARHAR MAHADEV CHOWK, NH 31, BEGUSARAI, BIHAR - 851101
PH :9204756206.

BETTIAH

110. SHREE GOPAL AUTO PVT. LTD. (O401-O4-01), BEETIAH - MOTIHARI HIGHWAY , NH-28 B, NEAR MACHALI LOK, BEETIAH (BIHAR). - 845438
PH :6254-223050/9771486183.

BHAGALPUR

111. SEEMANCHAL MOTORS PVT. LTD. (G802-G8-01), BAUSI ROAD, ALIGANJ, NEAR SAINT TRESA SCHOOL, ALIGANJ, BHAGALPUR. - 812005
PH :0641-8797096012/8797096019.

BIHARSHARIF

112. REESHAV AUTOMOBILES (MG01-TG-03), PATNA RANCHI ROAD, NR GAGAN DIWAN SOGARA SCHOOL, THANA-LAHERI MURARPUR, BIHARSHARIF, DISTRICT-NALANDA, BIHAR - 803101
PH :7061295297.

BUXAR

113. PEARL CARS (VV01-VV-01), C/O DEVDHTRHA UPPDHYYA, SYNDICATE, BYE PASS ROAD, BUXAR - 802101
PH :6183-8294634605/8294634602.

CHAPRA

114. REESHAV AUTOMOBILES (MG01-TH-02), 146, PLOT NO. 381, VILLAGE RAUJA, CHAPRA PATNA ROAD, NEAR BHIKHARI CHOWK, CHAPRA, BIHAR - 841301
PH :9263637646.

DANAPUR

115. ALANKAR AUTO SALES & SERVICE (1504-NN-02), ADJASCENT ARYA SAMAJ MANDIR, NEAR SAGUNA MORE, DANAPUR, - 800018
PH :9386898458.

DARBHANGA

116. KRISHNA MOTORS (1V01-1V-01), KHATA NO.61936, RAUSHAN CHOWK, BAJITPUR, B.M.P. -13, ROAD, DARBHANGA, BIHAR - 846009
PH :9204552405.
117. KRISHNA MOTORS (1V01-1V-03), VIP ROAD, ALLALPATTI, DARBHANGA (BIHAR) - 846003
PH :9204552405.

GAYA

118. KARLO AUTOMOBILES PVT LTD (Y601-Y6-01), BODH GAYA, GAYA. - 824231
PH :631-016312200277, 09708231604.

GOPALGANJ

119. SHREE GOPAL AUTO PVT. LTD. (O301-O3-01), NH-28, DANAPUR, TEHSIL-MANJAGARH,GOPALGANJ (BIHAR) - 800023
PH :06156-292290/9771486139.

HAJIPUR

120. REESHAV AUTOMOBILES (MG01-MG-01), KHATA 617 & KHASHRA 354/1605, NEAR RELIANCE PETROL PUMP, M G SETU ROAD, HAJIPUR (VAISHALI). - 844101
PH :9263632163.

KATIHAR

121. SEEMANCHAL MOTORS PVT. LTD. (O601-O6-01), NEAR SBP VIDIYA VIHAR SCHOOL, SIRSA, KATIHAR PURNEA ROAD, KATIHAR - 854105
PH :6452-8797096021/8797096019.

KISHANGANJ

122. SEEMANCHAL MOTORS PVT. LTD. (PX01-PX-01), PASCHIM PALI ROAD, COLLEGE ROAD, THANA:KNE, WARD NO.1, KISHANGANJ (BIHAR). - 855101
PH :06456-233074/8797096043.

MOHANIA

123. PEARL CARS (VW01-VW-01), MOHANIA-BUXAR ROAD ,SH-14,MOHANIA - 821109
PH :6187-8294634632/8294634649.

MOTIHARI

124. RAJIV AUTOMOBILES PVT LTD (T401-FH-03), NEAR CHHATAUNI CHOWK, BESIDE NH 28 A, MOTIHARI TOWN , BIHAR - 845401
PH :6252-241405, 9234609669.

MUZAFFARPUR

125. RAJIV AUTOMOBILES PVT LTD (T401-T4-01), RAMDAYALU NAGAR, PATNA HAZIPUR ROAD, MUZAFFARPUR, BIHAR - 842002
PH :0621-2272660/9910347908/9234609671.
126. RAJIV AUTOMOBILES PVT LTD (T401-T4-02), RAMDAYALU NAGAR, NEAR BMALANG STHAN, PATANA-MUZAFFERPUR HIGHWAY, - 842002
PH :7677773918/9234456810.

NAUGACHIA

127. SEEMANCHAL MOTORS PVT. LTD. (CFS1-CFS-01), NEAR GAYATRI PLY ROOM, NH-31, NAUGACHIA MARKET, NAUGACHIA, DISTRICT – BHAGALPUR, BIHAR. - 853204
PH :8797096014, 8797096020.

NAWADA

128. REESHAV AUTOMOBILES (MG01-TJ-04), 191 & 400, KHSARA NO. 3105 & 3102, NEAR DM'S OFFICE, PATNA-RANCHI MAIN ROAD, NAWADA, BIHAR - 805110
PH :9263632156.

PATNA

129. CITY AUTO SERVICES (1582-15-01), 9/1, PATLIPUTRA INDUSTRIAL ESTATE, PATLIPUTRA , PATNA
PH :0612-2265916,9334115999.
130. KARLO AUTOMOBILES PVT LTD (1502-15-04), NEAR BATA GUNJ, DINGA PATNA, BIHAR. - 800013
PH :612-'09304212119/9304217120.
131. VAU'S AUTOMOBILE (1503-15-01), BESIDES GODAVARI APPARTMENT, ASHIANA ROAD, PATNA. - 800014
PH :9771446012.
132. ALANKAR AUTO SALES & SERVICE PVT LTD (1504-15-03), PLOT NO.118-119, BEHIND DURGA MARINE DRIVE APARTMENTS, DUJRA DEVI STHAN, ASHOK RAJPATH, PATNA - 800001
PH :612-2528415/ 9934020200.

PURNEA

133. SEEMANCHAL MOTORS PVT. LTD. (6V01-6V-01), NH-31, NEAR MARKETING YARD, GULAB BAGH, PURNEA (BIHAR) - 854326
PH :06454-232229/87979096014.

SAHARSA

134. G S MOTORS (AAP1-AAP-02), PATUAHA, NH 107 SAHARSA,BIHAR - 852201
PH :9263638456.

SAMASTIPUR

135. KRISHNA MOTORS (1W01-1W-01), KHESRA NO. 3190-95, KHATA NO. 76, HERPUR ALLOTH, SAMASTIPUR, BIHAR. - 848101
PH :9204061641.

SASARAM

136. PEARL CARS (1X01-1X-01), PLOT NO.7, 9 & 11, NH-2 MORE SARAI, SASARAM (BIHAR) - 821115
PH :6184-8294634602/8294634605.

SITAMARHI

137. RAJIV AUTOMOBILES PVT. LTD. (EO01-EO-01), DUMRA ROAD, SHANTI NAGAR, SITAMARHI. - 843301
PH :9234609671.

SIWAN

138. SHREE GOPAL AUTO PVT LTD (O501-O5-01), CHAPRA ROAD, NEAR CHAPDHALA, NH 85, SIWAN - 841236
PH :6154-9771486144/9771486132.

CHANDIGARH

CHANDIGARH

139. AUTOPACE NETWORK (P) LTD (0705-07-01), PLOT #112-113, INDUSTRIAL AREA, PHASE-1, CHANDIGARH - 160002
PH :9878422201.
140. MODERN AUTOMOBILES (0702-07-01), 4 M.W. INDL AREA, CHANDIGARH - 160002
PH :01072-650555, 656333.
141. C M AUTOSALES PVT. LTD. (0706-07-01), PLOT NO.130, PHASE-1, INDUSTRIAL AREA, CHANDIGARH - 160029
PH :0172-5200250.
142. STAN AUTOS PVT LTD (L104-07-03), B-42, INDUSTRIAL AREA, PHASE-II, CHANDIGARH - 160002
PH :0172-5003700.

CHANDIGARH (U.T)

CHANDIGARH

143. TRICITY AUTOS (9M01-07-02), PLOT NO 29/6, INDUSTRIAL AREA PHASE-2, CHANDIGARH - 160002
PH :0172-4222222.

CHHATTISGARH

AMBIKAPUR

144. MAHAMAYA AUTOCARS PVT. LTD. (AE01-AE-01), MANEDRAGARH ROAD, AMBIKAPUR, CHATTISGARH. - 497001
PH :7774-231852, 53.

BALODA BAZAAR

145. SKY AUTOMOBILES (5001-GJ-04), AMBEDKAR CHOWK, RAIPUR ROAD, BALODA BAZAAR, CHATTISGARH. - 493332
PH :7727-222606.

BEMETARA

146. GANAPATI MOTORS (CBC1-CBC-01), BHILAI ROAD, OPP. OF GOVT COLLEGE BEMETERA (CHHATTISGARH) - 491335
PH :9644264450.

BHATAPARA

147. SPARSH AUTOMOBILES (BBJ1-BBJ-01), RAIPUR ROAD, BHATAPARA (CHATTISGARH) - 493118
PH :9926626662.

BHILAI

148. GANAPATI MOTORS (8303-83-03), R 17, INDUSTRIAL AREA, NANDINI ROAD, CHAVANI ROAD, BHILAI. - 490026
PH :788-4030011, 4075000.

BILASPUR

149. SATYA AUTOMOBILES (C301-C3-03), SECTOR C, PLOT NO. 42, SIRGITTI INDUSTRIAL AREA, BILASPUR, CHATTISGARH - 495001
PH :7752-645048, 252024.

DHAMTARI

150. SKY AUTOMOBILES (7V01-7V-01), KASRA NO.238/2, SEHARA DABRI, RAIPUR ROAD, DHAMTARI-493773 CHATTISGARH - 492009
PH :8889998612.

DURG

151. GANAPATI MOTORS (7W02-7W-01), OPP JAINAM PLACE, BEFORE PULGAON CHOWK, PULGAON NAKA, DURG, C. GARH - 491001
PH :788-9826643000.

GARIABAND

152. SPARSH AUTOMOBILES (CCH1-CCH-01), NEAR HP PETROL PUMP, RAIPUR ROAD, GARIYABAND, CHHATTISGARH. - 756032
PH :9669638883.

JAGDALPUR

153. SKY AUTOMOBILES (EC01-EC-01), GEEDAM ROAD, JAGDALPUR, CHATTISGARH. - 494001
PH :07782-231500/231498.

JANJGIR

154. SATYA AUTOMOBILES (C301-9N-02), NEAR KHOKSHA RAILWAY CROSSING, CHAMPA ROAD, NH-200, JANJGIR - 495668
PH :07817-9981260403.

KANKER

155. SKY AUTOMOBILES (5001-KG-06), RAZA NAGAR, SINGARBHAT, NH-30, KANKER , DISTRICT – KANKER, CHHATTISGARH - 494334
PH :07722-233111.

KAWARDHA

156. GANAPATI MOTORS (DI01-DI-01), NEAR KRISHI UPAJ MANDI, BILASPUR - KAWARDHA ROAD, KAWARDHA (DISTT - KABEERDHAM), CHHATTISGARH - 491995
PH :07741-275591.

KORBA

157. SATYA AUTOMOBILES (U701-U7-03), SHED NO. 1, INDUSTRIAL AREA, KORBA - 495681
PH :07759-228167, 228168, 228169.

MAHASAMUND

158. SPARSH AUTOMOBILES (5002-9P-02), BARONDA CHOWNK, BAGBAHRA ROAD, MAHASAMUND.
PH :7723-224880.

MANENDRAGARH

159. MAHAMAYA AUTOCARS PVT. LTD. (AE01-BCE-02), WARD NO.21, NH-43, AMBIKAPUR ROAD, NEAR HP PETROL PUMP, MANENDRAGARH, DISTT. KORIYA - 497442
PH :8817282064.

MUNGELI

160. SATYA AUTOMOBILES PVT LTD. (BLE1-BLE-01), KHASRA NO. 270/2, BILASPUR ROAD, MUNGELI, CHHATTISGARH - 861468
PH :9981266667, 08,09.

PATHALGAON

161. MAHAMAYA AUTOCARS PVT. LTD.
(BXO1-BXO-01), KHASRA NO. 567/2,
PHATALGAON, DISTRICT – JASPUR,
CHHATTISGARH. - 496118
PH :8889955558.

PITHORA

162. SPARSH AUTOMOBILES (CCG1-CCG-01), PLOT NO. 284/1, RAMSAGAR PARA, RAIPUR ROAD, PITHORA, CHHATTISGARH. - 761008
PH :9009645552.

RAIGARH

163. SHAKTI AUTOMOBILES (7Y81-7Y-01), ORRISSA ROAD, KABIR CHOWK, BANJHIPALI, RAIGARH, C.GARH
PH :9300006496.
164. SATYA AUTOMOBILES (7Y02-7Y-01), JINDAL ROAD, RAIGARH - 496001
PH :07762-228177,215810.

RAIPUR

165. SKY AUTOMOBILES (5001-50-01), G.E.ROAD, MOHABA BAZAR, RAIPUR. - 492010
PH :0771-4214000.
166. SKY AUTOMOBILES (5001-50-02), K.K. ROAD, MOUDHAPARA, RAIPUR. - 492001
PH :0771-4019000.
167. SPARSH AUTOMOBILES (5002-50-01), PACHPADI NAKA, OPP. DUTTA DRY CLEANER, DHAMKARI, JAGDALPUR ROAD, RAIPUR. - 492001
PH :0771-4222222.
168. SKY AUTOMOBILES (5001-50-07), ADJOINING WALLFORT CITY, BHATGAON, RING ROAD NO. 2, RAIPUR, CHHATTISGARH. - 492013
PH :9425204051.
169. SKY AUTOMOBILES (5001-50-05), NEAR R.K. MALL, KOTA ROAD, RAIPUR - 492001
PH :0771-4032505.
170. SKY AUTOMOBILES (5003-50-01), AVANTIVIHAR ROAD, TELEBANDHA, RAIPUR (C.G) - 492006
PH :0771-4207000.
171. SPARSH AUTOMOBILES (5002-50-04), OPP. UNION BANK, MAIN ROAD, PANDRI, RAIPUR - 492004
PH :0771-4222213.
172. SPARSH AUTOMOBILES (5002-50-05), PLOT - 31, INDUSTRIAL ESTATE, OPP MAHESH COLD STORAGE, BHANPURI, RAIPUR
PH :9926626662.

RAJIM

173. SPARSH AUTOMOBILES (5002-MO-03), RAIPUR ROAD, NEAR AMMANI PETROL PUMP, NAYAPARA, RAJIM. - 493881
PH :7701-234556.

RAJNANDGAON

174. GANAPATI MOTORS (8303-LQ-04), NEAR HANUMAN TEMPLE, GRAM MANKI, NH-6, RAJNANDGAON. - 491441
PH :7744-291721.

SARAIPALI

175. SKY AUTOMOBILES PVT. LTD. (BUF1-BUF-01), KHASRA NO.482/5 AND 482/6, RAIPUR ROAD, SARAIPALI, DIST-MASAMUND, SARAIPALI - 493558
PH :7725-4030011, 4075000.

SARANGARH

176. SATYA AUTOMOBILES PVT LTD.
(BUC1-BUC-01), KASRA NO. 71/4, 73/2, 74/2, 75/1 AND 76/2, SARANGARH BIKAS KHAND, SARANGARH, DISTT. RAIGARH. - 733751
PH :9981266667,08,09.

DADRA & NAGAR HAVELI

SILVASSA

177. KATARIA AUTOMOBILES PVT. LTD
(ED01-ED-01), NEAR ATHAL CHAR RASTA,DADAR & NAGAR HAVELI, SILVASSA - 396230
PH :0260
-2650057/56.

DAMAN & DIU

DAMAN

178. KATARIA AUTOMOBILES PVT. LTD (0104-98-08), NEAR AKASWANI CENTER, RINGANWADA, NANI DAMAN , DAMAN UNION TERRITORY - 396210
PH :0260-8866002499/2244002.

DELHI

DELHI

179. J.J IMPEX (MARUTI SERVICE MASTERS) (0883-08-03), PLOT NO. 9, SSI INDUSTRIAL ESTATE,G.T. KARNAL ROAD, OPP JAHANGIR PURI,NEAR KDR WOOL FACTORY,DELHI - 110033
PH :011-40715500, 40715501.
180. J.J IMPEX (MARUTI SERVICE MASTERS) (0883-08-01), F-39,OKHLA INDUSTRIAL AREA,PHASE-II,NEW DELHI - 110020
PH :011-41612194, 40685500.
181. MARUTI SALES & SERVICE(DELHI) (0810-08-01), C-119, INDUSTRIAL AREA PHASE-I, NARAINA, NEW DELHI - 110028
PH :011-45541113.
182. A M AUTOMOBILES (A UNIT OF BLUE BIRD ENTERPRISES) (0891-08-01), 189-91, ,LAWRANCE ROAD,,DELHI
PH :011-48280000.
183. GALAXY AUTOMOBILES (0881-08-01), 8 INDUSTRIAL AREA,TILAK NAGAR,NEW DELHI,
PH :011-43276666.
184. AAA VEHICLEADES PVT. LTD. (08B4-08-01), B-244,OKHLA,PHASE-1,NEW DELHI, - 110020
PH :011-46664888-46664999.
185. BAGGA LINK MOTORS PVT LTD. (0811-08-01), 395 PATPAR GANJ INDL. AREA,PATPARGANJ,NEW DELHI - 110092
PH :011-46488830, 46488831.
186. BAGGA LINK MOTORS PVT LTD. (0811-08-02), LINK ROAD,(NEAR BAGGA PETROL PUMP),KAROL BAGH,NEW DELHI - 110005
PH :011-23524646, 23522626.
187. COMPETENT AUTOMOBILES CO LTD (0806-08-01), 895/C-8,NEAR JAIN MANDIR DADA BARI,MEHRAULI,NEW DELHI - 110030
PH :011-47724700, 47724707.
188. COMPETENT AUTOMOBILES CO LTD (0806-08-03), PLOT NO.3,GAZIPUR,DELHI, - 110096
PH :011-45300000.
189. D.D. MOTORS (08B2-08-01), A-1 UDYOG VIHAR,NEW ROHTAK ROAD,PEERAGARHI,DELHI - 110041
PH :011-25963535, 48616500.
190. D.D. MOTORS (0813-08-01), A-100 MAYAPURI,PHASE-II,NEW DELHI - 110064
PH :011-41845000, 49305232.
191. D.D. MOTORS (08A3-08-01), 5, WAZIRPUR,INDUSTRIAL AREA,ADJACENT TO WAZIRPUR DEPOT,RING ROAD, NEW DELHI - 110034
PH :011-27153996-99, 27151466-67.
192. KRISH AUTOMOTORS PVT. LTD. (08C1-08-01), PLOT NO.9, SSI INDUSTRIAL ESTATE, GT KARNAL ROAD, NEW DELHI. - 110063
PH :011-43288888.
193. MAGIC AUTO PVT. LTD. (0888-08-01), A-93,PHASE-2,MAYAPURI INDL AREA,DELHI - 110064
PH :011-41847777.
194. MAGIC AUTO PVT. LTD. (08B7-08-01), PLOT NO. 68/3,MOTINAGAR,NEW DELHI, - 110015
PH :011-43777777, 43777721.
195. MAGIC AUTO PVT. LTD. (08B7-08-02), PLOT NO. : B-7, G.T. KARNAL ROAD, DELHI, - 110033
PH :011-45977777.
196. MARKETING TIMES AUTOMOBILES PVT LTD (0887-08-01), 18, OKHLA INDUSTRIAL ESTATE, PHASE-3, NEW DELHI - 110020
PH :011-40999999, 40999904.
197. RANA MOTORS PVT LTD (08A1-08-02), C-47,OKHLA INDUSTRIAL AREA,PHASE-II,NEW DELHI - 110020
PH :011-41707777.
198. ROHAN MOTORS LTD. (0886-08-01), F-9/B-1, MOHAN COOPERATIVE INDUSTRIAL ESTATE, MATHURA ROAD, DELHI - 110044
PH :011-40567900, 41679252-259.
199. SAYA AUTOMOBILES PVT. LTD. (0808-08-03), A 21-22, G.T.KARNAL ROAD, NEW DELHI - 110033
PH :011-47088888.
200. T.R. SAWHNEY MOTORS PVT LTD (0819-08-01), 33 & 34, HARICHAND MELARAM COMPLEX, EAST GOKULPUR, WAZIRABAD ROAD, DELHI - 110094
PH :011-71115333.
201. T.R. SAWHNEY MOTORS PVT LTD (0819-08-02), B-6 INDUSTRIAL AREA, PHASE I, OPP SECTOR 18, BADLI, NEW DELHI - 110042
PH :011-71118333.
202. T.R. SAWHNEY MOTORS PVT LTD (0819-08-04), PLOT NO.-508, FUNCTIONAL INDUSTRIAL ESTATE, PATPARGANJ - 110092
PH :011-9873851333.
203. T.R. SAWHNEY MOTORS PVT LTD (08C3-08-01), PLOT NO. -A/191, OKHLA PHASE-1, DELHI - 110020
PH :011-71119333.
204. SAYA AUTOMOBILES (0808-08-2B), KHASRA NO.2,G.T. KARNAL ROAD,OPP. GURUDUARA HARGOVIND SINGH,SIRAS PUR BADLI,DELHI - 110033
PH :011-27731325, 27731856.
205. COMPETENT AUTOMOBILES CO. LTD. (0806-08-05), B-83 MAYAPURI PHASE I, NEW DELHI - 110015
PH :011-47268980.
206. BAGGA LINK MOTORS PVT LTD. (0811-08-03), PLOT NO.4,6,8,10 NEAR FORTIS HOSPITAL, OPPOSITE NIRULAS, BABA POTERY COMPOUND, ARUNA ASAF ALI ROAD, VASANT KUNJ, NEW DELHI - 110070
PH :011-45688888, 45688811.
207. RANA MOTORS PVT LTD (08A1-08-04), B-6/6, OKHLA INDUSTRIAL AREA PHASE-II, NEW DELHI - 110020
PH :011-40877777, 26389930.
208. COMPETENT AUTOMOBILES (0806-08-06), 14, SHIVAJI MARG, NAGAFGARH ROAD, NEW DELHI
PH :011-8377007980/81/02.
209. RANA MOTORS PVT LTD (08A1-08-05), A-8, RAJASTHANI UDYOG NAGAR, NEAR AZADPUR FRUIT MARKET, G.T. KARNAL ROAD, OPP. METRO PILLAR NO.119, DELHI. - 110033
PH :011-41609999, 42474444.
210. MAGIC AUTO PVT. LTD. (08B8-08-01), KHASRA NO. 220 & 248, VILLAGE-DHUL SIRAS, SECTOR-24, DWARKA NEW DELHI. - 110077
PH :9910445501, 9818555669.
211. KRISH AUTOMOTORS PVT. LTD. (08A9-08-03), A-3, WAZIRPUR INDUSTRIAL AREA, DELHI. - 110052
PH :011-42020000, 9910114255.

212. T.R. SAWHNEY MOTORS PVT LTD (08D2-08-01), B-19, MAYAPURI INDUSTRIAL AREA, PHASE-1, NEW DELHI. - 110064
PH :011-71119333, 9999049337.
213. D.D. MOTORS (0813-08-05), 9/55 KIRTI NAGAR, INDUSTRIAL AREA, NEW DELHI - 110015
PH :999903888.
214. MAGIC AUTO PVT. LTD. (08D5-08-01), PLOT NO. 449 & 450, PATPARGANJ INDUSTRIAL AREA, NEW DELHI. - 110092
PH :011-9818741741.
215. DD MOTORS (0813-08-06), 85B RANAJI ENCLAVE, NAGLI SAKRAWATI, NAJAFGARH, NEW DELHI. - 110043
PH :011-9999127840/9999127947.
216. PREM MOTORS PVT. LTD. (08D4-08-01), KH. NO.804/2,MAHIPALPUR MATA CHOWK, DELHI - 110037
PH :011-42390000.
217. AAA VEHICLEADES PVT. LTD. (08B9-08-03), VILLAGE GHEVRA, KHASRA NO.87/3, 87/8 & 87/13/1, DELHI-ROHTAK ROAD, METRO PILLAR NO.616, MUNDKA, NEW DELHI - 110041
PH :011-66118888.

GOA

BICHOLIM

218. SAI SERVICE PVT. LTD. (BHN1-BHN-01), CITY SURVEY NO. 46/1, MUSLIM WADDO, BICHOLIM, GOA - 403529
PH :0832-2385500.

CANACONA

219. CHOWGULE INDUSTRIES PVT. LTD. (IT01-IT-01), PLOT NO.40, CANCONA INDUSTRIAL ESTATE, SHREESTAL, CANCONA, SOUTH GOA - 403702
PH :0832-2633010.

CUNCOLIM

220. SAI SERVICE PVT. LTD. (3402-AAO-06), SURVEY NO.64/7, SHOP NO.3-A-II, CANCNAMODDI, CUNCOLIM, SOUTH GOA - 403703
PH :0832-2763062, 2763063.

DHARBANDORA

221. CHOWGULE INDUSTRIES PVT. LTD. (3408-GO-07), AT- KHANDEPAR- USGAON, TAL-DHARBANDORA, SOUTH GOA - 403401
PH :0832-2345221.

MAPUSA

222. CHOWGULE INDUSTRIES PVT. LTD. (3408-8Z-03), PLOT NO. 19/20,THIVIM INDUSTRIAL ESTATE,KARASWADA, MAPUSA,GOA - 403507
PH :0832-2258000/5/6.
223. SAI SERVICE PVT. LTD. (3402-8Z-05), D-2/9,MAPUSA INDUSTRIAL ESTATE,MAPUSA, GOA, - 403507
PH :0832-2267000.

MARGAO

224. CHOWGULE INDUSTRIES PVT. LTD. (3408-1Y-01), OPP.DAMODAR TEMPLE,FATORDA,MARGOA,GOA - 403602
PH :0832-2749100,2749135,169,180,741237, 39.
225. SAI POINT CARS PVT LTD (3409-1Y-01), H.NO.17,WARD NO.5,SURVEY NO.34/3,34/4,MARGAON PONDA HIGHWAY,SONFATOR AMBORA,CAMURLIN,SALCETE ,GOA - 403722
PH :0832-2746700/2858899.
226. SAI SERVICE PVT. LTD. (3402-1Y-02), SURVEY NO. 212/4,VILLAGE - VERNA,TAL : SALCETE ,NEXT TO AGNEL POLYTECHNIC, MARGAO - 403718
PH :0832-2883000, 2791195,791192-96.
227. CHOWGULE INDUSTRIES PVT. LTD. (3408-1Y-08), PLOT NO. M-58 AND M-59, PHASE 3B, VERNA INDUSTRIAL ESTATE, MARGAO, VERNA, SALCETE SOUTH GOA, GOA - 403722
PH :0832-2782400.

PANAJI

228. CHOWGULE INDUSTRIES PVT. LTD. (3408-P1-02), D.B BANDODKAR MARG,CAMPAL,PANAJI,GOA - 403001
PH :0832-2433000/2.
229. SAI SERVICE PVT. LTD. (3402-P1-01), SURVEY NO: 36/1,PENHA DE FRANCE,TAL : BARDEZ, ALTO PCRVORIM,GOA - 403501
PH :0832 -2419200, 2414324,412084.
230. SAI SERVICE PVT. LTD. (3402-P1-07), SHOP NO. 14, DUKLE HEAVEN, ST. INEZ, PANAJI, NORTH GOA - 403001
PH :0832-22229222/2225222.

PONDA

231. SAI SERVICE PVT. LTD. (3402-34-03), OFF PANJIM HIGHWAY,PONDA,GOA, - 403401
PH :0832-2324106, 2311499, 2324120.

SANVORDEM

232. CHOWGULE INDUSTRIES PVT. LTD. (BTK1-BTK-01), SURVEY NO. 4, SUBDIVISION-3, VILLAGE – CACORA, TALUKA – CURCHOREM, SANVORDEM, DIST. – SOUTH GOA, GOA . - 403706
PH :8322652300.

SATTARI

233. CHOWGULE INDUSTRIES PVT. LTD. (3408-BOP-10), SURVEY NO. 60, SUB DIV NO. 05, VILLAGE ARVALEM, VILLAGE PANCHAYAT ARVALEM, TALUKA SATTARI, NORTH GOA, GOA - 403505
PH :0832-6410187.

TALEIGAON

234. CHOWGULE INDUSTRIES PVT. LTD. (3408-NP-06), SURVEY NO. 122, MAHBOS, NEAR SHANKARWADI TEMPLE, SHANKARWADI, TALEIGAON, - 403001
PH :0832-2431799,2231217.

VASCO

235. SAI SERVICE PVT. LTD. (3402-CP-04), NEXT TO SHIKALIM CHURCH,SHIKALIM,VASCO,GOA - 403802
PH :0832-2542581/2526008/2526000/9850559425,2414327.
236. CHOWGULE INDUSTRIES PVT. LTD. (3408-CP-09), OPP BHRAMASTAL TEMPLE, PATRONG BAINA, VASCO,GOA - 403802
PH :0832-2540121/833540131.

GUJARAT

AHMEDABAD

237. KIRAN MOTORS LIMITED (0102-01-04), SURVEY NO. 245/3, TP SCHEME NO. 43, NEAR KARGIL PETROL PUMP, SCIENCE CITY ROAD, AHMEDABAD - 380060
PH :079-65457555.
238. KATARIA AUTOMOBILES PVT. LTD (0104-01-01), D/8 BEHIND ESI HOSPITAL,OUTSIDE DARIAPUR DARWAJA,AHMEDABAD - 380016
PH :079-22174053/54.
239. KATARIA AUTOMOBILES PVT. LTD (0104-01-05), NEAR KOKHRA BRIDGE,MANINAGAR - 380008
PH :079-22160571/72.
240. KATARIA AUTOMOBILES PVT. LTD (0110-01-01), BEHIND ADANAL PUMP, ,NEAR MAKARBA CROSSING, MAKARBA,SG HIGHWAY - 380051
PH :079-30112333 / 30112312.
241. KIRAN MOTORS LIMITED (0102-01-01), SARKHEJ - GANDHINAGAR HIGHWAY,OPP. RAJPATH CLUB,AHMEDBAD - 380054
PH :0272-6740955, 67.
242. KIRAN MOTORS LIMITED (0102-01-02), BEHIND L&T GODOWN,SARKHEJ SANAND HIGHWAY, AHMEDABAD - 382210
PH :079-26891863, 26891009, 65459555, 65228555, 65229555..
243. KIRAN MOTORS LIMITED (0102-01-03), BASEMENT, RIVERA ARCADE,NR. AUDA GARDEN, PRAHLADNAGAR, 100FT RING ROAD,SATELLITE, AHMEDABAD - 390015
PH :079-26924777,26927333.
244. POPULAR WHEELERS (INDIA) PVT. LTD. (0105-01-01), PATEL TRUST BUILDING, AVTAR HALL,NAROL, NARODA HIGHWAY,ISANPURA ROAD,AHMEDABAD - 382443
PH :079-61903232.
245. POPULAR WHEELERS (INDIA) PVT. LTD. (0111-01-01), BESIDE SOLA ROAD BRIDGE,S. G. HIGHWAY SOLA,AHMEDABAD - 380054
PH :079-65058111.
246. UDAY AUTOLINK (0113-01-01), NEAR GALAXY SPACIA, OPP. DASTAN FARM, S. P. RING ROAD, KATHWADA, AHMEDABAD, GUJARAT - 382430
PH :079-31927070.
247. NANDA AUTOMOBILES (0114-01-01), SURVEY NO. 229/3, OPP. GOKULESH PETROL PUMP, NAROL - ASLALI ROAD, NAROL, AHMEDABAD, GUJARAT. - 382405
PH :079-8866558787 / 8460088883.
248. STARLINE CARS (P) LTD (0115-01-01), PLOT NO. 103/2, NANDA CHILODA, NEAR RAILWAY CROSSING, KRISHNANAGAR ROAD, NARODA, AHMEDABAD - 382330
PH :079-29701051/53.
249. KIRAN MOTORS (0112-01-02), FINAL PLOT NO.33/1/1, NEAR SHRUSHTI LAVISH, OPP. SHYAM VILLA-II, NARODA-NIKOL ROAD, NIKOL DISTT. AHMEDABAD - 382330
PH :079-60020555/60021555.
250. POPULAR WHEELERS (INDIA) PVT. LTD. (0109-01-01), BEHIND G. B. SHAH COLLEGE, NEAR SWAMINARAYAN PARK, VAISHALI TOWNSHIP ROAD, VASNA, AHMEDABAD, GUJARAT. - 380007
PH :079-30491101, 02.
251. ATUL MOTORS PVT. LTD. (0116-01-01), PLOT NO. 116, BOPAL – AMBIL ROAD, BOPAL , AHMEDABAD, DISTRICT – AHMEDABAD, GUJARAT. - 380058
PH :079-61993300.
252. KIRAN MOTORS LIMITED (0112-01-01), SURVEY NO. 82/1/1, NEAR H.P. PETROL PUMP, MOTERA ROAD, CHANDKHEDA, AHMEDABAD - 380005
PH :079-65054555 / 575.

AMOD

253. RAVIRATNA MOTORS (F801-ZE-03), ROYAL PARK, JAMBUSAR-BHARUCH ROAD, AMOD, DISTRICT: BHARUCH, GUJARAT. - 392110
PH :9687691106.

AMRELI

254. ATUL MOTORS (9E01-9E-01), LATHI BY PASS ROAD, AMRELI, GUJARAT. - 365601
PH :02792-8140909098.

ANAND

255. AMAR CARS PVT LTD (F702-F7-01), JANTHA CROSSING,SOJITRA ROAD,ANAND - 388121
PH :02692-229980, 229981.

ANKALESHWAR

256. RAVIRATNA MOTORS (P901-P9-01), PLOT NO. 624/2/BA, GIDC, VALIA ROAD, ANKLESHWAR - 393002
PH :02646-225132/28.

BARDOLI

257. KATARIA AUTOMOBILES PVT. LTD. (Q106-Q1-02), BLOCK NO.13, NANDIDA CROSS ROAD, BARASADI VILLAGE, SURAT-BARDOLI ROAD, BARDOLI, GUJARAT - 394310
PH :922803307/9228004697/02622-302222.

258. DHRU MOTORS (4002-Q1-02), G.I.D.C,SURAT BARDOLI ROAD,BARDOLI, - 394601
PH :02622-9825413113/9879104454.

BAREJA

259. KATARIA AUTOMOBILES PVT. LTD. (BAN1-BAN-01), 5/6/7, ADITYA COMPLEX NATIONAL HIGHWAY-8, BAREJA , TALUKA – DASKROI, DISTRICT – AHMEDABAD, GUJARAT - 382425
PH :079-7046079997.

BARWALA

260. UDAY AUTOLINK PVT. LTD. (I401-I4-01), OPP. HILTON HOTEL, BHAVNAGAR HIGHWAY, TA BARWALA, DIST. AHMEDABAD - 382450
PH :7567449999.

BAVLA

261. KATARIA AUTOMOBILES PVT. LTD (0104-RX-07), NEAR ESSAR PETROL PUMP, BAVLA -AHMEDABAD HIGHWAY, BAVLA - 382220
PH :02714-231250.

BHACHAU

262. K.D. MOTORS (P501-JP-02), SUNRISE MALL,OPP. BUS STAND,BHACHAU BHUJ ROAD, BHACHAU, GUJARAT - 370140
PH :02837-223402.

BHARUCH

263. RAVIRATNA MOTORS (F801-F8-01), NH 8, OPP YOGI PETROL PUMP,P.O. ZADESHWAR,BHARUCH - 392011
PH :02642-233506, 507, 504.

BHAVNAGAR

264. ETERNAL MOTORS PVT LTD (C901-C9-01), 14/1 & 2 GIDC,BEHIND S.T.WORKSHOP,CHITRA,BHAVNAGAR - 364004
PH :9227893042, 44.

265. ETERNAL MOTORS PVT LTD (C901-C9-02), PLOT NO. 1858/A-2,OPP GOLIBAR HANUMAN MANDIR, BEHIND GAUSHALA, RUPANI CIRCLE, BHAVNAGAR - 364002
PH :0278-2562462, 9228007221.

266. ETERNAL MOTORS PVT. LTD. (C901-C9-04), 6/8 & 11 GIDC, BHAVNAGAR - RAJKOT HIGHWAY, CHITRA, BHAVNAGAR (GUJARAT), - 364004
PH :0278-9228007215, 9227893040.

267. ETERNAL MOTORS PVT LTD (C901-C9-05), PLOT NO.29, SURVEY NO.37/1 & 37/2 NEAR TALAJA OCTROI CIRCLE, BESIDE INDIAN OIL PUMP, TALAJA ROAD, ADHEWADA, BHAVNAGAR, DISTT: BHAVNAGAR, GUJARAT - 364002
PH :0278-9099091926, 9227893036.

BHUJ

268. K.D. MOTORS (P501-P5-01), PLOT NO. 5/6/14,UMANAGAR,MIRZAPUR HIGHWAY ROAD , BHUJ,GUJARAT - 370001
PH :2832-02832-232534/5.

BODELI

269. KIRAN MOTORS LIMITED (0R01-0R-01), OPP.NARMADA GUEST HOUSE,DABHOI ROAD, BODELI, TALUKA: SANKHEDA,VADODARA - 391135
PH :02665-222223 / 222224.

BORSAD

270. AMAR CARS PVT LTD (BJM1-BJM-01), BORSAD – TARAPUR HIGHWAY, BORSAD , DISTRICT – ANAND, GUJARAT - 388540
PH :0265-9586477744.

BOTAD

271. ETERNAL MOTORS PVT LTD (C901-AP-03), OPP.MULTIPLEX CINEMA,YOGI NAGAR,PALIYAD ROAD,BOTAD - 400092
PH :02849-8511118832, 9099095344.

CHOTILA

272. DREAM VEHICLES PVT. LTD. (CFI1-CFI-01), SURVEY NO. 31, PLOT NO. 1, NILKANTH SOCIETY, NH NO. 8A, AHMEDABAD-RAJKOT, AT & PO – CHOTILA, DISTRICT – SURENDRANAGAR, GUJARAT. - 363520
PH :8238000979.

DABHOI

273. KATARIA AUTOMOBILES (UU01-UU-01), OPP. VEGA BUS STOP, NEAR VEGA CROSS ROAD, DABHOI-BODELI ROAD, DABHOI, TA:DABHOI, DI:VADODARA - 391110
PH :02663-255311.

DAHOD

274. R B CARS PVT. LTD. (2C01-PL-02), NEAR SIMANDHAR JAIN TEMPLE, OLD INDORE HIGHWAY,DAHOD - 389151
PH :02673 -244307.

DEESA

275. TANU MOTORS PVT. LTD. (Q801-UQ-03), NH-14, NR. ESSAR PETROL PUMP, RADHANPUR HIGHWAY, HANUMAN NAGAR, MALGADH, DEESA - 385535
PH :02744-270499.

DEHGAM

276. NANDA AUTOMOBILES (2B01-NR-03), NEAR UMIYA MATAJI TEMPLE,COLLEGE ROAD,AHMEDABAD ROAD, DEHGAM - 382305
PH :02716-234567.

DEVGADH BARIA

277. R B CARS PVT. LTD. (2C01-AOA-05), BESIDE ARIHANT PETROL PUMP, PIPLOD ROAD, DEVGADH BARIA - 389380
PH :0265-2771122.

DHARAMPUR

278. KATARIA AUTOMOBILES PVT. LTD. (BSK1-BSK-01), SURVEY NO.29/3/P1, VILLAGE ASHURA NR. ASHURA CIRCALE, DHARAMPUR DISTT. VALSHAD, GUJARAT - 396050
PH :02633-240600.

DHARI

279. ATUL MOTORS PVT. LTD. (GG01-GG-01), PLOT NO. 9, DHARI - KHAMBHA ROAD, NEAR RAILWAY FATAK DHARI , TALUKA - DHARI, DIST. - AMRELI, GUJARAT. - 365640
PH :0281-2462779, 6699000, 9824200001, 7046233352.

DHRANGADHRA

280. DREAM VEHICLES PVT. LTD. (IM01-IM-01), PLOT NO. 79, SURENDRANAGAR- DHRANGADHRA ROAD, OPP. ARMY WORKSHOP, DISTRICT-SURENDRANAGAR. - 363310
PH :2754-281234.

GANDHI NAGAR

281. NANDA AUTOMOBILES (2B01-2B-01), 1003,SECTOR-28,GANDHI NAGAR - 382028
PH :079-23212692 / 93 / 94.

GANDHIDHAM

282. B M AUTOLINK (7702-77-01), EAST OF PLOT NO. 30-35,NATIONAL HIGHWAY, GANDHIDHAM - 370201
PH :02836-223330.

283. B M AUTOLINK (7702-77-03), SURVEY NO.129/26 P, GALPADAR HIGHWAY, GANDHIDHAM , DISTT.KACHCHH, GUJARAT. - 370110
PH :9727725004.

GODHRA

284. R B CARS PVT. LTD. (2C01-2C-01), PLOT NO. 112/11.,12-VAVDI,GODARA - DAHOD HIGHWAY, GODHRA, PANCHMAHAL, GUJARAT - 389001
PH :02672-265306, 265307, 365308.

285. R B CARS PVT. LTD. (2C01-2C-04), GODHRA -LUNAWADA ROAD, GODHRA, DISTRICT: PANCHMAHAL - 389001
PH :02672-262749.

GONDAL

286. ATUL MOTORS (PVT) LTD (5503-AD-05), 8-B NATIONAL HIGHWAY, OPP. DAULAT OIL MILL, NR. NILKANTH VIRUDASHRAM, RAJKOT HIGHWAY,GONDAL - 360311
PH :02825-294495.

HALOL

287. R B CARS PVT. LTD. (BKC1-BKC-01), PLOT NO. 104/6 & 104/8, VADODARA – GODHRA HIGHWAY, NEAR NAVJIVAN HOTEL, HALOL, DISTRICT – PANCHMAHAL, GUJARAT - 389350
PH :02678-220201.

HALVAD

288. DREAM VEHICLES PVT. LTD. (GX01-GX-01), PLOT NO.5 & 6, NAKLANKDHAM TOWNSHIP, OPP. HONEST RESTAURANT, AHMEDABAD HIGHWAY, HALVAD DISTT. SURENDRANAGAR (GUJARAT) - 363330
PH :02758-291409.

HIMMATNAGAR

289. KIRAN MOTORS LIMITED (P601-P6-01), NEAR G.I.D.C,MOTIPURA, HIMMATNAGAR - 383001
PH :02772- 9824576711.

IDER

290. KIRAN MOTORS LIMITED (UX01-UX-01), SURVEY NO.69 IDAR-AMBAJI ROAD, IDAR DIST: SABARKANTHA - 383430
PH :8155994111.

JAMNAGAR

291. ATUL MOTORS (PVT) LTD (F401-F4-01), SURVEY NO.422, PLOT NO. 16,17 & 19, JAMNAGAR, GUJARAT - 361001
PH :0288-3041001.

292. ATUL MOTORS (PVT) LTD (F401-F4-04), C-36, MP SHAH ARUN UDYOG, SARUSECTION ROAD, JAMNAGAR - 361002
PH :0288-2550251.

JASDAN

293. ATUL MOTORS PVT. LTD. (5503-OB-09), SURVEY NO. 1253, PLOT NO. 4, NEAR KALYAN PETROL PUMP, JASDAN-ATKOT HIGHWAY, JASDAN, DIST.-RAJKOT, GUJARAT. - 360050
PH :02821-291222 7046299952.

JETPUR

294. PERFECT AUTO SERVICES (PK01-PK-01), NEAR ANKUR HOTEL, OPP. DHARESHWAR GEB STATION, PITHADIA, RAJKOT HIGHWAY, JETPUR (GUJARAT). - 360370
PH :(02823)-9978998806.

JUNAGADH

295. PERFECT AUTO SERVICES (5502-K8-06), SURVEY NO.45/1, PLOT NO. 214-C/D/E/F, GIDC-I, DOLATPARA, JUNAGADH - 362001
PH :9879518052.

KADI

296. STARLINE CARS (P) LTD (D101-UR-07), OPP. COTTON MARKETING YARD, KADI-CHATRAL ROAD, TAL: KADI, DIST: MEHSANA - 382715
PH :02764-241200.

KALOL

297. NANDA AUTOMOBILES (2B01-FW-02), PLOT NO. - 162-168, GIDC,KALOL MEHSANA HIGHWAY, NEAR CHIRAG CINEMA ROAD, KALOL. - 383028
PH :02764-220781 / 82 / 83.

KARJAN

298. AMAR CARS PVT LTD (UZ01-UZ-01), SURVEY NO.851/787 BESIDE PMT TOOLS, KANDARI, N.H. -8, KARJAN, DISTT-VADODRARA (GUJARAT) - 391210
PH :0265-2458282/2458585.

KHAMBHAT

299. AMAR CARS PVT LTD (BNF1-BNF-01), PLOT NO. 7/8/9, RAJMAHAL PARK, OPP. SARDAR CHATRALAY, LAL DARWAJA, GAYATRINAGAR ROAD, KHAMBHAT, TALUKA KHAMBHAT, ANAND DISTRICT, GUJARAT - 388620
PH :0265-9909960706.

KIM

300. KATARIA AUTOMOBILES (UW01-UW-01), PLOT NO. 116-121, DAL MILL COMPOUND, OPP. SURAT JILLA SANGH, KIM CROSS ROAD, NH-8, KIM - 394110
PH :02621 -3081240/251,235555.

LIMBDI

301. DREAM VEHICLES PVT. LTD. (BSG1-BSG-01), SURVEY NO.276/1, NEAR PANCHVATI HOTEL, LIMDI CROSS ROAD, AHMEDABAD-RAJKOT HIGHWAY, LIMDI, DISTT. SURENDRANAGAR, GUJARAT. - 363421
PH :02758-261262.

LUNAWADA

302. R B CARS PVT. LTD. (BYN1-BYN-01), SURVEY NO.90, AT-BHAYASAR, GODHRA-LUNAWADA HIGHWAY, LUNAWADA , TALUK-LUNAWADA, DISTT-MAHISAGAR, GUJARAT. - 389230
PH :9879126981, 9825967139 9586746703.

MAHESANA

303. STARLINE CARS (P) LTD (D101-D1-01), NAGALPUR HIGHWAY,MAHESANA , GUJRAT - 384002
PH :02762-255454 & 231707.

MAHUVA

304. ETERNAL MOTORS PVT. LTD. (IV01-IV-01), VIJAY - PARTH COMPLEX, BANDAR ROAD, MAHUVA(GUJARAT) - 364290
PH :02844-226226 / 9227893041.

MANDAL

305. KIRAN MOTORS (IW01-IW-01), SURVEY NO. 708, MANDAL - DETROJ HIGHWAY, NR. RELIANCE PETROL PUMP, MANDAL , DI: AHMEDABAD, GUJARAT. - 382130
PH :02715-9408803925.

MANDVI

306. K.D.MOTORS (UY01-UY-01), PLOT NO.25,26 & 27, RAJ COMMERCIAL, SURVEY NO.246, NEAR "THE BEACH RESORT", MANDVI NALIYA ROAD, MANDVI-KUTCH - 370465
PH :02834-295100 / 01.

MANSA

307. NANDA AUTOMOBILES (2B01-0L-04), OPP. GIDC, VISNAGAR ROAD, MANSA, DISTRICT-GANDHINAGAR, GUJARAT - 382845
PH :9727921000.

MEHSANA

308. TANU MOTORS PVT. LTD. (Q801-D1-04), SURVEY NO.78, NEAR SUNRISE AUTOMOBILES (AMW DEALER), GUJARAT STATE HIGHWAY NO.41, MEHSANA - 384002
PH :02762-291102, 291103, 291104.

METODA

309. ATUL MOTORS PVT. LTD. (5503-BLW-08), PLOT NO. 2328, GATE NO. 2, METODA GIDC, METODA, TALUKA LODHIKA, DISTRICT - RAJKOT, GUJARAT - 360021
PH :9924688774.

MODASA

310. KIRAN MOTORS LIMITED (P601-CR-02), SHAMLAL JI ROAD,SABARKANTHA DIST., MODASA - 383315
PH :2774- 8155995111.

MORBI

311. PERFECT AUTO SERVICES (5502-X5-07), SURVEY NO. 351/2, PLOT NO. 10, DHARTI INDUSTRIAL AREA, RAJPURA ROAD, SANALA, MORBI , TEHSIL-MORBI, DISTT.-MORBI, GUJARAT. - 363641
PH :9879518052, 9099058044 9925199569.

MOTI KHAVADI

312. ATUL MOTORS (PVT) LTD (AAU1-AAU-01), PLOT NO.22 & 29, NEAR PADANA POLICE STATION, JAMNAGAR-KHAMBHALIYA HIGHWAY, MOTI KHAVDI, ZANKHAR, TA: LALPUR, DIST - JAMNAGAR, GUJARAT. - 361140
PH :0288-2846015.

MUNDRA

313. B M AUTOLINK (7702-AJ-02), PRAGPAR ROAD,MUNDRA,DISTRICT-KUTCH, GUJARAT, - 370421
PH :02838-296020.

NADIAD

314. AMAR CARS PVT LTD (F702-P7-02), NEAR RAJHANS MULTIPLEX,NADIAD-UTTARSANDA ROAD - 387370
PH :0268-2587981, 2587980.

NAVSARI

315. KATARIA AUTOMOBILES PVT. LTD (Q701-Q7-01), PLOT NO.-891, OPP PAUVA MILL, NH-8,NEAR GANESH SISODRA CHOKDI,GANESH SISODIA NAVSARI, GUJRAT - 396463
PH :02637-304444/304439.

OLPAD

316. COMET CAR SALES & SERVICE PVT. LTD. (4006-ZZ-02), 1906/1907, OPP. KUMBHARVAD, JUNA PURA, OLPAD - 394540
PH :0261
-220066 / 220088.

PADRA

317. AMAR CARS (2205-OC-02), NEAR WESTERN BYPASS, AT SAMIYALA, PADRA, DIST. – VADODARA, GUJARAT - 391440
PH :02662-223355/223366.

PALANPUR

318. TANU MOTORS (Q801-Q8-01), OPP.DHARTI RESORT, ABU- AHMEDABAD HIGHWAY, PALANPUR - 385001
PH :02742-254477/254499/254000.

319. STARLINE CARS PVT. LTD. (D101-Q8-08), SURVEY NO.4 & 5/2, OPPOSITE L K PETROL PUMP, PALANPUR-DEESA HIGHWAY, PALANPUR-385001, DISTT BANASKANTHA, GUJARAT - 385001
PH :2742-265665.

PALSANA

320. KATARIA AUTOMOBILES PVT. LTD (4004-ZF-07), BESIDE SAINATH COMPLEX, KADODARA AHMEDABAD ROAD , NH-8, UMBHEL GAM,TALUKA: PALSANA KADODARA, SURAT. - 382721
PH :02622-9228004677, 8866001593.

PATAN

321. STARLINE CARS (P) LTD (D101-Q9-02), CHANASMA HIGHWAY, PATAN - 384265
PH :02766-7046046184 & 7046046186.

PORBANDAR

322. ATUL MOTORS (F401-T6-05), PLOT NO. 208, GIDC VANANA, NATIONAL HIGHWAY , PORBANDAR, DIST. PORBANDAR GUJARAT - 360577
PH :0286-290002.

PRANTIJ

323. KIRAN MOTORS LIMITED (AAI1-AAI-01), NO.6/P, OPP. VEGETABLE MARKET, PRANTIJ HIGHWAY, VILLAGE-KHAMALPUR, TALUKA-PRANTIJ, DISTT. SABARKANTHA, GUJARAT - 383205
PH :9624401888.

RAJKOT

324. ATUL MOTORS (PVT) LTD (5503-55-01), NEAR BHAKTI NAGAR STATION CIRCLE,TAGORE ROAD, RAJKOT - 360002
PH :0281-2462781/82.

325. ATUL MOTORS (PVT) LTD (5503-55-02), BEHIND HP PUMP,UNIVERSITY ROAD ,NEAR SNK SCHOOL, RAJKOT - 360005
PH :0281-2575513/14.

326. PERFECT AUTO SERVICES (5502-55-01), PERFECT HOUSE,GONDAL ROAD,VANDI,RAJKOT - 360004
PH :0281-360588, 366759.

327. PERFECT AUTO SERVICES (5502-55-04), 150 RING ROAD,OPP. GANDHIGRAM POLICE CHOWKI,RAJKOT - 360005
PH :0281-2576233, 2576234.

328. ATUL MOTORS (PVT) LTD (5503-55-06), RAJKOT AHMEDABAD HIGHWAY, NR. CHANDARANA PETROL PUMP, OPP. GUJARAT SAMACHAR PRESS, AT. NAVAGAM RAJKOT - 360003
PH :0281-2704573.

329. PERFECT AUTO SERVICES (5502-55-08), R.S. NO. 50/1, 150 FEET RING ROAD, RAIL NAGAR, RONKI, RAJKOT, GUJARAT. - 360006
PH :9979861995.

RAJPIPLA

330. RAVIRATNA MOTORS PVT. LTD. (9X01-9X-01), OPP. JALARAM SAW MILL, NEAR HARSIDDHI MATAJI TEMPLE, RAJPIPLA, DIST: NARMADA, GUJARAT - 393145
PH :02640-223508.

RAJULA

331. ATUL MOTORS PVT LTD (BAK1-BAK-01), HINDORNA CHOWKDI, JAFRABAD ROAD, RAJULA DISTT. AMRELI (GUJARAT) - 365560
PH :02794-221501.

SANTRAMPUR

332. R B CARS PVT. LTD. (2C01-RY-03), NEAR PTC COLLEGE, SANT ROAD, SANTRAMPUR,DISTT.-PANCHMAHAL - 389260
PH :02675
-221752.

SAVLI

333. KIRAN MOTORS LTD. (CFD1-CFD-01), SURVEY NO. 2592/1 PAKKI 2, NEAR RELIANCE PETROL PUMP, BHADRVA CHOWKDI, SAVLI – TIMBA ROAD, SAVIL, TALUK – SAVLI, DISTRICT – VADODARA, GUJARAT. - 391770
PH :9624099195.

SAYAN

334. KIRAN MOTORS LTD. (OO01-OO-01), PLOT NO.6 TO 10 OF R BLOCK, SURVEY NO.209, VILLAGE PARIA, TALUKA: OLPAD, SAYAN - 394130
PH :9228007037/9712010100.

SURAT

335. DHRU MOTORS (4002-40-01), JEEVAN GANGA NAGAR,NEAR JEEVAN JYOT THEATRE,UDHNA MAIN ROAD,SURAT - 394210
PH :0261-406071/72.

336. DHRU MOTORS (4002-40-1B), 207, NEW INDUSTRIAL ESTATE,ROAD NO.-6,UDHNA UDYOG NAGAR, SURAT - 394210
PH :0261-0261-2272118/ 9978900862.

337. KATARIA AUTOMOBILES PVT. LTD (4004-40-04), OPP. VATSALYA BUNGLOWS,NEAR GUJARAT GAS CNG STATION,UDHNA MADGULLA ROAD, VESU,SURAT - 395007
PH :0261-2211005/9228004674.

338. KATARIA AUTOMOBILES PVT. LTD (4004-40-05), KATARIA ARCADE,OPP. RAJHANS CINEMA,DUMAS ROAD, PIPLOD, SURAT - 395007
PH :0261-3081238, 3081240, 3081251.

339. KIRAN MOTORS LIMITED (4001-40-01), SURAT-BARDOLI ROAD,DUMBHAL,NEAR PUNA JAKAT NAKA,SURAT - 395010
PH :0261-9824701590/9712010100.

340. KIRAN MOTORS LIMITED (4001-40-02), PANDESARA,BAMROLI ROAD,SURAT - 395002
PH :0261-2630361-4.

341. COMET CAR SALES & SERVICE PVT. LTD. (4006-40-01), CHIKUWADI COMPLEX, GHB ROAD, PANDESARA, SURAT. - 394221
PH :0261 -3091234.

342. KATARIA AUTOMOBILES LTD. (4004-40-08), BLOCK NO.233, TP NO.8, OPP. SHREE LEKHA RESIDENCY, PALANPORE, ADAJAN, SURAT - 394310
PH :0261-2778810 / 20 / 30 / 40.

343. COMET CAR SALES & SERVICE PVT. LTD. (4006-40-03), R. S. NO. 311, T. P. SCHEME-3, FINAL PLOT NO. 102/A, KATARGAM, SURAT, DISTRICT – SURAT, GUJARAT. - 395004
PH :0261-2480877, 2604877.

344. KIRAN MOTORS (P) LTD. (4005-40-01), PLOT NO. 443, FP NO. 26 MOJE PALGAM, ADAJAN, SURAT - 395009
PH :9712010100.

345. AMAR CARS PVT LTD (4009-40-01), BLOCK NO.116, SURVEY NO.128/1, SURAT-KAMREJ ROAD, VALAK PATIYA, NEAR VALAK NAGAR, TALUKA-KAMREJ, DISTT:SURAT - 395006
PH :0261-8980042799/89800471899.

346. AMAR CARS PVT LTD (4009-40-02), PLOT NO.10&11, SURVEY NO.7 & 9, SONARAS COMPOUND, NEAR DGVCL OFFICE, KARMNATH MAHADEV TEMPLE LANE, KAPODARA, VARACHHA ROAD, SURAT - 395006
PH :0261-7069026555/7069026666.

SURENDERNAGAR

347. DREAM VEHICLES PVT. LTD. (LC01-LC-01), 261/P, OPP MARKETING YARD,GIDC AREA,WADHWAN CITY, SURENDERNAGAR - 363030
PH :02752-241314 / 651516.

UMRETH

348. AMAR CARS PVT. LTD. (CFE1-CFE-01), R. S. NO. 30/2, NADIAD-DAKOR ROAD, UMRETH , DIST.ANAND, GUJARAT. - 388220
PH :7567898716.

UNA

349. PERFECT AUTO SERVICES (BFD1-BFD-01), SURVEY NO. 113, PLOT NO. 6, OPP. SWAMI VIVEKANAND VIDYALAYA, NEAR BANSIDHAR PETROL PUMP, BHAVNAGAR HIGHWAY, VAYAJPUR, UNA, DISTRICT – GIR SOMNATH, GUJARAT. - 362560
PH :8511147523.

UNJHA

350. TANU MOTORS (Q801-GR-02), OPP. DHANA DAL FACTORY,MEHSANA PALANPUR HIGHWAY, UNJHA - 384170
PH :02742-224499.

VADODARA

351. KATARIA AUTOMOBILES PVT. LTD (2204-22-02), OPPOSITE SHARDA MANDIR HIGH SCHOOL, VINOBA BHAVE ROAD, SALATWADA, VADODARA - 390001
PH :08866002482 / 1584.

352. AMAR CARS PVT LTD (2203-22-01), GORWA ROAD,VARODARA,GUJARAT, - 390016
PH :0265-2291500, 01, 02.

353. KIRAN MOTORS LIMITED (2201-22-01), 909/4,G.I.D.C.MAKARPURA,VADODARA - 390010
PH :0265-2642212.

354. KIRAN MOTORS LIMITED (2201-22-02), PLOT NO.160,SUB-I NUTAN GUJ.INDL.ESTATE,OLD CHHANI ROAD, VADODARA - 390002
PH :0265-2771744, 45.

355. AMAR CARS PVT LTD (2203-22-02), KALA GHODA, OPP. KIRTI MANDIR, VADODARA, DIS: VADODARA, GUJARAT - 390001
PH :0265-2428282.

356. KATARIA AUTOMOBILES PVT. LTD (2204-22-01), 984/4,GIDC, OLD NH-8,MAKARPURA ROAD, VADODARA, GUJARAT - 390010
PH :0265-3091257 / 34.

357. AMAR CARS PVT LTD (2205-22-01), VARASIYA AIRPORT ROAD, OPP POONAM CINEMA, KARELIBAUG, VADODARA,GUJARAT - 390016
PH :0265-2488787.

358. KIRAN MOTORS LIMITED (2201-22-03), C/O ARBUDA COLD STORAGE, 823 POWER CABLE ROAD, DHARMSINH ROAD, OPP. UMA AMAR PARTY PLOT, NEAR CHHANI JAKAT NAKA, VADODARA - 390002
PH :0265-2771122.

VALSAD

359. KATARIA AUTOMOBILES PVT. LTD (0104-2E-06), SURVEY NO. 211,ATUL-ALSAD ROAD,PARNERA,AVALSAD, GUJARAT - 396020
PH :02632 -233244 / 233245.

VALVADA

360. VITESSE TRADING LIMITED (0503-V1-05), SURVEY NO.137/1 Q 148/1 VILLAGE VALVADA,NATIONAL HIGHWAY-8, NEAR KARAMBELI STATION, DISTT.VALSAD(GUJ) - 396105
PH :0260-787301.

VANSDA

361. KATARIA AUTOMOBILES PVT. LTD. (Q701-SB-02), JAMNABA PARK, VANSDA HANUMAN BARI CHAR RASTA, VANSDA-DHARAMPUR ROAD, RANI FALIYA, VANSDA, DISTRICT – NAVSARI, GUJARAT - 396580
PH :02630-223490.

VAPI

362. KATARIA AUTOMOBILES PVT. LTD (0104-97-03), PLOT NO. C-29,NATIONAL HIGHWAY-8,G. I. D. C., VAPI, TAL. PARDI - 396195
PH :0260-3081240/3081260.

363. KATARIA AUTOMOBILES PVT. LTD (0104-97-09), PLOT NO. 304/2, VILLAGE BALITHA, NH-8, OPP BABA SITARAM TEMPLE, NEAR SWAMINARAYAN SCHOOL, SALAV, VAPI , DISTRICT -VALSAD, GUJARAT - 369191
PH :0260-2408202/8866001591/9327740903.

VERAVAL

364. PERFECT AUTO SERVICES (5502-AH-05), NR. BALIYA HANUMAM,VERAVAL - JUNAGADH HIGHWAY, JUNAGADH, GUJARAT - 362265
PH :02876-221122.

VIJAPUR

365. STARLINE CARS (P) LTD (D101-V2-04), HIMMATNAGAR HIGHWAY, ANANDPURA CHAR RASTA, VIJAPUR - 382870
PH :02763-220059.

VIRAMGAM

366. KIRAN MOTORS LIMITED (AAB1-AAB-01), SURVEY NO.319/P, NILKI CHOKDI, VIRAMGAM, DISTT: AHMEDABAD, GUJARAT. - 382150
PH :8156016222.

VISNAGAR

367. STARLINE CARS (P) LTD (D101-RW-05), VISNAGAR -AMBAJI ROAD, OPP. DHAROI COLONY, VISNAGAR, DISTT.- MEHSANA - 384315
PH :02765-222977.

VYARA

368. COMET CAR SALES & SERVICE PVT. LTD. (BIY1-BIY-01), SHOP NO. 11 & 12, BLOCK NO. 175/1/A, RS NO. 113, VYARA-SURAT ROAD, VYARA, DISTRICT – TAPI, GUJARAT - 394650
PH :02626-221410/11.

WANKANER

369. ATUL MOTORS PVT LIMITED (BAL1-BAL-01), RAJKOT-WANKANER HIGHWAY, NEAR JADESHWAR CHAMBERS, NEAR INTERNATIONAL CERAMIC, WANKANER (GUJARAT) - 363621
PH :02828-221556.

HARYANA

AMBALA

370. EAKANSH WHEELS (1802-18-01), STONE NO. 126, JAGADARI ROAD, VILLAGE TEPLA, AMBALA - 133001
PH :0171-2822500,600,900.

371. EAKANSH WHEELS (1802-18-03), PLOT NO. 8, BASANT VIHAR, BEHIND SWASTIK MARBLE, NEAR MOTOR MARKET, AMBALA CITY, HARYANA - 133001
PH :01712542549, 9991802000.

372. MODERN AUTOMOBILES (1801-18-01), MODEL TOWN CROSSING, G.T.ROAD, AMBALA, HARYANA. - 134003
PH :0171-2521444, 2520155.

373. MODERN AUTOMOBILES (1801-18-02), NEAR AMAR PALI RESTAURANT, G.T. ROAD, AMBALA - 134003
PH :0171-2520448.

ASSANDH

374. KARNAL MOTORS (8906-CS-04), OPP. NEW GRAIN MARKET, KARNAL ROAD ASSANDH, DISTT. KARNAL - 272032
PH :1749-272032.

BAHADURGARH

375. SIDHI VINAYAK VEHICLES PRIVATE LIMITED (2G01-2G-01), 1202, M.I.E, PART-B, MAIN ROHTAK ROAD, BAHADURGARH, DIST. JHAJJAR (HARYANA), - 124507
PH :01276268102 / 01276661111 / 9812580555.

376. SIDHI VINAYAK VEHICLES PRIVATE LIMITED (2G01-2G-02), KHASRA NO. 1681-82, MODERN INDUSTRIAL AREA, PART – B, BAHADURGARH. - 124507
PH :9992200429.

BALLABGARH

377. ROYAL MOTORS (9R81-9R-01), 21/5, G.T. ROAD, BALLABHGARD, DISTT-FARIDABAD
PH :0129-4271800, 9899242536, 2242536.

BARARA

378. EAKANSH WHEELS (NX01-NX-01), SH-4, KALA AMB - SHAHBAD - BARARA ROAD, BARARA - 133201
PH :01731-286400.

BARWALA

379. MODERN AUTOMOBILES (BSA1-BSA-01), KHEWAT/KHOTONI NO. 388, KHASARA NO. 46/9, 10, OPPOSITE AXIS BANK, VILLAGE BATAPUR, P.O. BARWALA, TEHSIL AND DISTT. PANCHKULA, HARYANA - 134118
PH :9416021648.

BERI

380. SIDHI VINAYAK VEHICLES PVT. LTD. (BEV1-BEV-01), PLOT NO. 53/2, NEAR MATA MANDIR, BERI DUJANA ROAD, BERI , DIST. JHAJJAR - 124201
PH :9992200415.

BHIWANI

381. JAGMOHAN MOTORS (X301-X3-01), DELHI ROHTAK ROAD, NEAR RADHA SWAMI SATSANG MANDIR, BHIWANI - 127021
PH :01664-9812000364.

BILASPUR

382. PANDIT AUTOMOBILES PVT. LTD. (BGH1-BGH-01), NEAR GRAMIN BANK, JAGADHRI ROAD, BILASPUR, DISTRICT – YAMUNANAGAR, HARYANA. - 135102
PH :01732-247777, 9812455350, 9812455879.

CHARKHI DADRI

383. JAGMOHAN MOTORS (X301-CT-02), BHIWANI LOHARU ROAD, CHARKHI DADRI, BHIWANI - 127306
PH :9992200363, 9992200362.

CHEEKA

384. EAKANSH MOTORS PVT. LTD. (U802-HU-04), MARBLE MARKET, PATIALA ROAD, CHEEKA, HARYANA, - 136034
PH :01743222277 / 01743222288.

DADRI-TOE

385. SIDHI VINAYAK VEHICLES PRIVATE LIMITED (BVH1-BVH-01), KHEWAT NO.270, 273 KILA NO.11/2/2 & 14 (8-0), 15/2 (7-16) VILL - DADRI TOE, MAIN BUS STAND JHAJJAR-GURGAON ROAD, TEHSIL - JHAJJAR, DISTT.-JHAJJAR, HARYANA. - 124103
PH :9992200433.

ELLENABAD

386. SHAKTI MOTORS PVT.LTD. (E401-IN-03), SURERA CHOWNK, NEAR CHAUDHARI MANI RAM COLLEGE, SIRSA ROAD, ELLENABAD - 125055
PH :1666-230168, 221953, 9729871902.

FARIDABAD

387. BATRA AUTO COMPANY (5803-58-01), 14/1 MILESTONE, MATHURA ROAD, FARIDABAD, - 121003
PH :0124-91-5274591-94.

388. BATRA AUTO COMPANY (5803-58-02), PLOT NO. 7, 18/2, MAIN MATHURA ROAD, FARIDABAD - 121003
PH :0129-2380907.

389. TCS AUTOMOBILES (5804-58-01), PLOT NO-1A, SECTOR-6, FARIDABAD, - 121001
PH :0129 -4292929.

390. VIPUL MOTORS LTD. (5801-58-03), UNIT-II, PLOT NO. 1A 19/6, MATHURA ROAD, FARIDABAD - 121006
PH :0129-4003052, 4286000,24,30.

391. VIPUL MOTORS LTD. (5801-58-01), 27/5 KM, MAIN MATHURA ROAD, FARIDABAD - 121002
PH :0129-4285000,33,66, 286640, 41, 290685.

392. FAIR DEAL CARS PVT. LTD. (5805-58-01), PLOT NO.-17A, NIT INDUSTRIAL AREA, NIT FARIDABAD - 121003
PH :9953340624.

FARRUKHNAGAR

393. PLATINUM MOTOCORP LLP (KE01-KE-01), KHEVAT NO. 299, MUSTIL NO.-12, KHASRA NO. -19/3 AND 22/2, VILLAGE – SEHADPUR MOHAMADPUR, TEHSIL – FARRUKHNAGAR, DISTRICT – GURGAON. - 123506
PH :9810181273, 9205192661.

FATEHABAD

394. SHAKTI MOTORS PVT.LTD. (2H02-2H-01), NH-10, SIRSA ROAD, FATEHABAD - 125050
PH :01667221799 / 01667221699 / 9896032100.

GANAUR

395. JAGMOHAN MOTORS PVT. LTD. (NA03-NA-01), RAILWAY ROAD, GANAUR - 131101
PH :0130-2461500.

GHARAUNDA

396. KARNAL MOTORS (8906-MR-05), WARD NO.-1, BEHIND GOVT. SR. SEC. SCHOOL COLONY, GHARAUNDA, - 132114
PH :01748-252030,252040.

GOHANA

397. JAGMOHAN MOTORS (CU02-CU-01), NEAR KHANPUR CHOWNK, ROHTAK PANIPAT HIGHWAY, GOHANA, DISTT. - SONEPAT - 131301
PH :9992200357.

GURGAON

398. COMPETENT AUTOMOBILES CO LTD (9505-95-01), A-25, INFOCITY, SECTOR-33, GURGAON - 122004
PH :0124-425200.

399. PASCO AUTOMOBILES (9506-95-01), PASCO HOUSE, 6 PALAM GURGAON ROAD, INDUSTRIAL ESTATE, GURGAON - 122006
PH :0124-8912555, 8912000, 8912869, 8912870.

400. PASCO AUTOMOBILES (9506-95-02), SECTOR 17-18, DIVIDER ROAD, GURGAON, HARYANA, - 122015
PH :0124-4012555.

401. VIPUL MOTORS LTD. (5801-95-02), 504, UDYOG VIHAR, PHASE-III, GURGAON - 122001
PH :0124-4395700/1, 4004019-23, 9811723030.

402. ROHAN MOTORS LTD. (9508-95-01), 2482/84, SECTOR-52A, WAZIRABAD VILLAGE, OPP. AARDI CITY MALL, GURGAON - 122001
PH :7065574220.

403. VIPUL MOTORS LTD. (5801-95-04), PLOT NO.5/22/1, SARHAUL VILLAGE,SECTOR-18, MAIN ROAD, GURGAON. (HARYANA) - 201102
PH :0124-4285000.

404. PREM MOTORS PVT. LTD. (9511-95-01), PLOT NO.101, SAINI PLAZA MARKET, OPP. H BLOCK, NEAR RAM MANDIR, PALAM VIHAR, GURGAON - 122017
PH :7065003410, 7065000000.

405. PREM MOTORS PVT. LTD. (9512-95-01), PLOT NO. 3,IDC, OPPOSITE SECTOR-14, GURGAON - 122001
PH :7065003377, 7065003388.

406. PASCO AUTOMOBILES (9510-95-01), PLOT NO. 34/3, DINESH JAIN COMPLEX, DELHI-AJMER EXPRESSWAY (NH-8), RAJIV CHOWK, GURGAON, HARYANA. - 122001
PH :0124-9810047332, 9810052514.

407. RANA MOTORS PVT LTD (9509-95-02), PLOT NO.60, IDC, GURGAON - 122001
PH :0124-4867777.

408. RANA MOTORS PVT LTD (9509-95-03), QILA NO. 8/2, MUSTAKIL NO. 25, SECTOR 17-18, DIVIDING ROAD, GURGAON. - 122001
PH :0124-2340140.

HANSI

409. JAGMOHAN MOTORS (GT02-GT-01), G. T. HIGHWAY ROAD, MAIN ROHTAK HANSI ROAD, NEAR HOLLAND TRACTORS AGENCY & HP PETROL, HANSI - 124001
PH :9992200383.

HISSAR

410. HISSAR AUTOMOBILES (7601-76-01), 5TH KM STONE, SIRSA ROAD, HISSAR, HARYANA - 125001
PH :01662-76310, 76021.

411. MODERN AUTOMOBILES (7602-76-01), OPP. VIDYUT NAGAR, DELHI ROAD, HISAR, - 125005
PH :01662-20000, 21000.

412. MODERN AUTOMOBILES (7602-76-02), OPP. BBMB, HISSAR DELHI ROAD, HISSAR - 125001
PH :9354511110.

413. UNIQUE MOTORS PVT LTD (7603-76-01), OPP. BHANU INDUSTRIES, DELHI ROAD, VILLAGE: SATROD,HISSAR (HARYANA) - 125006
PH :8818055538.

JHAJJAR

414. SIDHI VINAYAK VEHICLES PRIVATE LIMITED (0B01-0B-01), NEAR GOVT. POLYTECHNIC, BAHADURGARH ROAD, JHAJJAR - 124507
PH :01251-271115 /271119.

JIND

415. EAKANSH MOTORS PVT. LTD. (U802-2K-06), PLOT NO. 1890/29, NEAR TRUCK UNION OFFICE, JIND-ROHTAK ROAD, JIND, HARYANA - 126102
PH :01681-247666.

JULANA

416. EAKANSH MOTORS PVT. LTD. (MA01-MA-01), JIND ROHTAK MAIN ROAD, OPP. NEW BUS STAND, JULANA, DIST. JIND, HARYANA - 126101
PH :8395906111.

KAITHAL

417. EAKANSH MOTORS PVT. LTD. (U802-U8-01), AMBALA ROAD, NH-65, KAITHAL - 136027
PH :01746-225959, 229100, 309330.

KALKA

418. MODERN AUTOMOBILES (EG02-EG-01), ADJOINING INDIAN OIL PETROL PUMP, RAM NAGAR, NH-22, KALKA, DISTRICT – PANCHKULA, HARYANA - 133302
PH :0173-224999/220555.

KARNAL

419. KARNAL MOTORS (8906-89-01), 71/3 MILESTONE ,G.T.ROAD, KARNAL - 132001
PH :0184-255555, 274387.

420. KARNAL MOTORS (8906-89-02), OPP. BUS STAND, AMBALA CHANDIGARH HIGHWAY, KARNAL - 132001
PH :0184-2274287.

421. MODERN AUTOMOBILES (8907-89-01), NEAR NAMASTE CHOWK, OLD G.T.ROAD, KARNAL - 132001
PH :0184-2272503.

KHARKHODA

422. JAGMOHAN MOTORS LTD. (BU01-BU-01), NEAR KANYA GURUKUL MAHAVIDYALYA, DELHI ROAD, NEAR UNION BANK, KHARKHODA (HARYANA) - 131402
PH :0130-2584111.

KOSLI

423. DINCO 4 WHEELS LLP (CAN1-CAN-01), OPPOSITE RAJIV GANDHI STADIUM, TEHSIL ROAD KOSLI, DISTRICT – REWARI, HARYANA . - 123302
PH :7082100202.

KUNDLI

424. JAGMOHAN MOTORS (GU02-GU-01), OPP. TDI OFFICE, DELHI KUNDALI BORDER, GT KARNAL ROAD SONEPAT - 131001
PH :0130-8059900535.

KURUKSHETRA

425. KARNAL MOTORS (8906-U6-03), PLOT NO. 156, INDUSTRIAL AREA, SECTOR-2, KURUKSHETRA
PH :01744-232827.

MADLAUDA

426. HARISONS AUTOMOBILES (CFK1-CFK-01), ASANDH ROAD, VILLAGE - MADLAUDA, TEHSIL - MADLAUDA, DISTRICT – PANIPAT. - 132113
PH :0180-2667788.

MANDI DABWALI

427. SHAKTI MOTORS PVT.LTD. (E401-KU-02), SANGARIA ROAD, DABWALI, DISTT.-SIRSA - 125104
PH :01668-229988,229966
9896023577.

MANESAR

428. PLATINUM MOTOCORP LLP (2L04-2L-01), PLOT NO.282, SEC 6, IMT MANESAR DISTT. GURGAON. - 122052
PH :0124-2656500.

MEHAM

429. JAGMOHAN MOTORS (A601-NZ-08), MAIN MARKET, NATIONAL HIGHWAY-10, ROHTAK-HISSAR ROAD, MEHAM, DISTRICT-ROHTAK - 124101
PH :9992100310.

MURTHAL

430. MURTHAL AUTO PVT. LTD. (BV81-BV-01), 44 HSIIDC, MURTHAL
PH :0130-2482230.

NARAINGARH

431. EAKANSH WHEELS (1802-CV-02), NH-72, AMBALA-KALA AMB ROAD, NEAR ADARSH FILLING STATION, NARAINGARH - 134203
PH :1734-285500.

NARWANA

432. EAKANSH MOTORS PVT. LTD. (U802-CW-03), OPP. HAFED GODOWN-2, NH-65 AKHERAM NAGAR, NARWANA - 126116
PH :01684-9813583100.

PALWAL

433. ROHAN MOTORS LTD. (EE01-EE-01), SANWAL COLONY, MAIN MATHURA ROAD, NEAR SDM COURT, PALWAL - 121101
PH :1275-304100.

PANCHKULA

434. CARE TAKER (K381-K3-01), PLOT NO. 36, INDUSTRIAL AREA, PHASE-2, PANCHKULA
PH :0172-2592310, 2594310, 5064336.

435. MODERN AUTOMOBILES (0702-K3-03), PLOT NO. 318, INDUSTRIAL AREA, PHASE-2, PANCHKULA - 134113
PH :0172-2594200.

436. AUTOPACE NETWORK PVT. LTD (0705-K3-03), PLOT NO. 5, INDUSTRIAL AREA, PHASE-1, PANCHKULA, HARYANA. - 134113
PH :9878427062.

PANIPAT

437. VIJAY MOTORS (D381-D3-01), PLOT# 136, INDUSTRIAL AREA, PHASE-1
PH :180-4001490.

438. HARISONS AUTOMOBILES (D301-D3-01), G.T.ROAD , PANIPATHARYANA - 132103
PH :01742-67292, 67225, 67782.

439. HARISONS AUTOMOBILES (D301-D3-03), NEAR JATAL ROAD, OLD CANAL, PANIPAT - 132103
PH :01802688088, 01804091801.

440. HARISONS AUTOMOBILES (D301-D3-04), PLOT NO.23, SECTOR-25, PHASE-1, PART-1, PANIPAT (HARYANA). - 132103
PH :0180-2667799,2667788.

PATAUDI

441. PLATINUM MOTOCORP LLP (BY03-BY-01), HALI MANDI ROAD, OPPOSITE SHIV MURTI, PATAUDI, DIST. - GURGAON - 122503
PH :0124-2672100.

PEHOWA

442. KARNAL MOTORS (8906-2M-06), NEAR SHARMA SERVICE STATION, KURUKSHETRA ROAD, PEHOWA - 136128
PH :01741220911
9996038881.

PUNDRI

443. EAKANSH MOTORS PVT. LTD. (BFF1-BFF-01), KILA NO- 3/10, KHEWAT 2147 OPP. HARCHARAN FILLING STATION, KAITHAL ROAD, PUNDRI DIST. KAITHAL, HARYANA - 136026
PH :8395906111.

RADAUR

444. PANDIT AUTOMOBILES PVT.LTD. (D201-EN-02), OPP. JMIT ENGG. COLLEGE, NEAR BUS STAND, RADAUR, DISTRICT-RADAUR, HARYANA - 135001
PH :01732-283165, 9812455884.

REWARI

445. DINCO 4 WHEELS LLP (U102-U1-01), BAWAL ROAD, NEAR BYE PASS ROAD, REWARI (HARYANA)) - 123401
PH :1274-261347.

ROHTAK

446. JAGMOHAN MOTORS (A601-A6-01), SONEPAT ROAD, ROHTAK - 124001
PH :01262-55002-5.

447. JAGMOHAN MOTORS (A601-A6-03), NEAR SUKHPURA CHOWK, DELHI BYEPASS ROAD, ROHTAK, - 124001
PH :9992200385.

SAFFIDON

448. EAKANSH MOTORS PVT. LTD. (U802-JU-05), NEAR BRSK SCHOOL , OPPOSITE RELIANCE PETROL PUMP, PANIPAT ROAD, SAFFIDON, DISTRICT- JIND - 126112
PH :9896155345.

SAHA

449. PUNJAB MOTOR & ENGG WORKS (1881-18-01), NH-73, SHAHZADPUR ROAD, SAHA, DISTT.-AMBALA
PH :0171-2822669, 9896402469.

SALAHAWAS

450. SIDHI VINAYAK VEHICLES PRIVATE LIMITED (BEQ1-BEQ-01), KHATA NO. 550, KHASRA NO. 62/17/2(4-4) 18/2(4-9) 19/1/1(3-1), JHAJJAR-KOSLI ROAD (VIA MATANHEL), NEAR BDPO OFFICE VPO & TEHSIL – SALAHAWAS, DISTRICT – JHAJJAR, HARYANA, - 124146
PH :9467165111.

SAMALKHA

451. HARISONS AUTOMOBILES (D301-LY-02), INDUSTRIAL AREA, GT ROAD, SAMALKHA, DISTT. PANIPAT, HARYANA - 132101
PH :8607000122.

SAMPLA

452. JAGMOHAN MOTORS PVT. LTD. (NY01-NY-01), NEAR VASUNDRA CAFÉ, DELHI ROHTAK ROAD, SAMPLA, DISTT. ROHTAK - 124501
PH :9812000351.

SHAHABAD

453. KARNAL MOTORS PVT. LTD. (CCR1-CCR-01), KHEWAT NO. 460, KATONI NO. 486, KHASRA NO. 170, TEHSIL - SHAHABAD, DIST.-KURUKSHETRA. - 136135
PH :9996206000.

SIRSA

454. SHAKTI MOTORS PVT.LTD. (E401-E4-01), DABBALI RD., SIRSA, HARYANA - 125055
PH :01666-30168.

SOHNA

455. PASCO AUTOMOBILES (9506-KZ-03), DAMDAMA MORE, GURGAON -SOHNA ROAD, SOHNA, HARYANA, - 122103
PH :0124-4952001.

SONEPAT

456. JAGMOHAN MOTORS (J501-J5-02), GAYATRI GARDEN, MURTHAL ROAD, SONEPAT (HARYANA) - 131001
PH :9812615000.

SONIPAT

457. JAGMOHAN MOTORS (J501-J5-01), BAHALGARH-DELHI ROAD, OPP. POWER HOUSE, SONIPAT - 131001
PH :01264-230114, 236106-07.

TAURU

458. PASCO AUTOMOBILES (BIV1-BIV-01), KILA NO. 34/1/2, REWARI ROAD, TAURU, DIST.-MEWAT, HARYANA. - 122015
PH :8683000902, 9873001497.

TOHANA

459. SHAKTI MOTORS PVT.LTD. (XP01-XP-01), NEAR GREEN VALLEY PUBLIC SCHOOL, RATIA ROAD, TOHANA - 125120
PH :01692-220099,220199.

TOSHAM

460. JAGMOHAN MOTORS (0Y01-0Y-01), BHIWANI ROAD, TEH. TOSHAM, DIST. BHIWANI. - 127040
PH :01253-8059900566.

YAMUNANAGAR

461. HIRA MOTOR GARAGE (D281-D2-01), PLOT NO 46, SHIVAJI PARK, OPPOSITE MADHU PALACE, YAMUNANAGAR, HARYANA
PH :1732-261937.

462. PANDIT AUTOMOBILES PVT.LTD. (D201-D2-01), GOVINDPURI ROAD, JAGADRI, YAMUNANAGAR - 135001
PH :01732-30099.

463. PANDIT AUTOMOBILES PVT.LTD. (D201-D2-03), PLOT NO.E-8, INDUSTRIAL AREA, ITI ROAD, YAMUNA NAGAR (HARYANA) - 135001
PH :9996426004.

HIMACHAL PRADESH

BAIJNATH

464. KANGRA VEHICLEADES (BBC1-BBC-01), TASHI JONG, PAPROLA-BAIJNATH, NH-20, KANGRA -MANDI ROAD, TEHSIL BAIJNATH, DISTT. KANGRA - 176115
PH :01892-251379.

BANIKHET

465. KANGRA VEHICLEADES PVT. LTD. (BWN1-BWN-01), KHASRA NO.709, KHATA KHATOONI NO.23, BANIKHET, THE-DALHOUSIE, DISTT. CHAMBA - 176303
PH :01899-254186, 232036, 9418048803.

BILASPUR

466. COMPETENT AUTOMOBILES CO. LTD. (6Y01-6Y-01), KHEWAT NO. 8/8 KHATAUNI, KHASRA NO. 137/30, 31, MAUZA KOTHI, PARGANA 9, P. O. – CHANDPUR, TEHSIL – SADAR, DIST.- BILASPUR, HIMACHAL PRADESH. - 174001
PH :01978-7807800330 / 7807800440.

CHAMBA

467. KANGRA VEHICLEADES (D902-JF-03), MOHALLA SULTANPUR, BALU BRIDGE, CHAMBA - 176310
PH :01899222086 , 9418059252.

468. KANGRA VEHICLEADES PVT. LTD. (D902-JF-05), KHASRA NO. 88/96,1 & KHASRA NO.628/276, VILLAGE & PO SAROO, THE. & DISTT. CHAMBA, HIMACHAL PRADESH. - 176310
PH :9988717437.

DEHRA

469. KANGRA VEHICLEADES (D902-HT-02), VILLAGE & P.O. SUNHET, TEHSIL DEHRA, DIST. KANGRA - 177101
PH :01970-234477.

GAGGAL

470. KANGRA VEHICLEADES (BBV1-BBV-01), NATIONAL HIGHWAY -20 , ZAMANABAD ROAD, ICHHI, GAGGAL, DISTT. KANGRA , HIMACHAL PRADESH - 176209
PH :9857645440.

HAMIRPUR

471. COMPETENT AUTOMOBILES CO LTD (W901-W9-01), VILLAGE TIKKAR, P.O DIDWIN TEHSIL & DISTT, HAMIRPUR - 177401
PH :01972-256281-84.

JASSUR

472. CLASSIC MOTOR GARAGE (8H81-8H-01), TEHSEEL NOOPUR, KANGRA, JASSUR, HIMACHAL PRADESH
PH :01893-226555.

JOGINDER NAGAR

473. COMPETENT AUTOMOBILES CO. LTD. (BBO1-BBO-01), VILL. DHELU PO DOHAG, JOGINDER NAGAR (H.P.) - 175015
PH :1692-9418263465.

KULLU

474. COMPETENT AUTOMOBILES (2Q01-2Q-01), OPPOSITE S.S.B. TRAINING CENTRE, SHAMSHI, KULLU - 175126
PH :1902-260665, 9625797817.

KUNIHAR

475. GOYAL MOTORS PVT. LTD. (BBX1-BBX-01), KHATA NO. – 77, VILLAGE KOTHI, P.O. KUNNIHAR, TEHSHIL – ARKI, DISTRICT – SOLAN, HIMACHAL PRADESH - 173207
PH :9818138772.

MANALI

476. COMPETENT AUTOMOBILES CO. LTD. (BKU1-BKU-01), VILL. CHOURI VIHAR (AALU GROUND), P.O. & THESIL- MANALI, DIST. KULLU, (H.P.) - 175131
PH :1902-9418387465.

MANDI

477. COMPETENT AUTOMOBILES CO. LTD. (B301-B3-01), GUTKAR INDUSTRIAL AREA, DELHI MANDI ROAD, N.H.21 GUTKAR, MANDI - 124501
PH :01905-23865.

NADAUN

478. COMPETENT AUTOMOBILES CO. LTD. (BXA1-BXA-01), VILLAGE JALAN, KHASRA NO.183, PO & TEHSIL NADAUN, DISTT. HAMIRPUR, HIMACHAL PRADESH - 177041
PH :01972-232865.

NAGROTA

479. KANGRA VEHICLEADES (D902-D9-01), MALAN, NAGROTA - BAGWAN, KANGRA, H.P. - 176047
PH :01892-251379, 251387.

NAGROTA BAGWAN

480. KANGRA VEHICLEADES PVT. LTD. (D902-D9-06), JHIKLI AMBARI, MOUZA AMBARI, MALAN, NAGROTA BAGWAN, TEHSIL & DISTT. KANGRA, HIMACHAL PRADESH - 176047
PH :01892-251379, 251387.

NALAGARH

481. GOYAL MOTORS (IB02-IB-01), NEAR HP PETROL PUMP, VILLAGE PEERSTHAN, P.O & TEHSIL NALAGARH, DISTT. SOLAN (H.P.) - 174101
PH :9418069672.

NURPUR

482. KANGRA VEHICLEADES (D902-JG-04), VILLAGE JACHH, PO JASSUR, TEHSIL NURPUR, DISTT. KANGRA - 176201
PH :01893-226789, 226333.

PALAMPUR

483. KANGRA VEHICLEADES (2T01-2T-01), NEAR IOCL PUMP, KANGRA MANDI ROAD, PALAMPUR, DISTT. KANGRA, HIMACHAL PRADESH. - 176061
PH :1894-236227.

PAONTA SAHIB

484. GOYAL MOTORS PVT. LTD. (A901-8G-02), OPP BIBIJEET KAUR SENIOR SECONDARY SCHOOL, SHAMSHERPUR , NH-72, PAONTA SAHIB - 173025
PH :9418061728.

RAJGARH

485. GOYAL MOTORS PVT. LTD. (BJX1-BJX-01), KHATA NO. 517/505, 478/3, KHASRA NO. – 38/98 VILLAGE NERI RATAULI, P.O. RAJGARH TEHSIL – RAJGARH, DISTRICT – SIRMAUR , HIMACHAL PRADESH - 173101
PH :9818138772.

RAMPUR BUSHAHR

486. GOYAL MOTORS PVT. LTD. (BYF1-BYF-01), KHASRA NO. 824/825, MINN NO. 155/396, 163/411, NAGLI, ROHRU ROAD, RAMPUR, TEHSIL – RAMPUR, DISTRICT – SHIMLA. - 172001
PH :94183245752.

ROHRU

487. GOYAL MOTORS (JZ01-JZ-01), CHARGAON SHIMLA ROAD, ROHRU, DISTRICT -SHIMLA - 171207
PH :9418018472.

SHIMLA

488. GOYAL MOTORS PVT. LTD. (A901-A9-01), TARADEVI, SHIMLA,(H.P.) - 171010
PH :0177-231872.

SOLAN

489. GOYAL MOTORS PVT. LTD. (7D01-7D-01), DEON GHAT, SOLAN - 173211
PH :01792-220472.

UNA

490. COMPETENT AUTOMOBILES (QD01-QD-01), VILLAGE RAINSARY,P.O JHALERA,TEHSIL & DISTRICT:UNA - 174303
PH :1972-256281-84.

JAMMU & KASHMIR

ANANTNAG

491. PEAKS AUTO PVT. LTD. (2Y01-2Y-01), NH-1A, MOUZA UROONHALL, THE & DISTT. ANANTNAG - 228165
PH :1932-228165.

BANDIPORA

492. JAMKASH VEHICLEADES (KASHMIR) PVT. LTD. (1205-OA-04), AJAR BANDIPORA , J&K - 193502
PH :01957-225185.

BARAMULA

493. JAMKASH VEHICLEADS(KASHMIR)PVT. LTD. (8C01-8C-01), VILLAGE SANGRAMA,WAGAROO, BARAMULA - 193101
PH :0194-2138951.

DODA

494. J&K VEHICLEADES (2Z01-2Z-01), MINTO CAR CARE, AKHYARABAD, MAIN ROAD, DODA CITY, DODA (J&K) - 182202
PH :1996233146.

GANDERBAL

495. JAMKASH VEHICLEADES (KASHMIR) PVT. LTD (ZA01-ZA-01), MALSHAIE BAGH, GANDERBAL (J&K) - 191201
PH :0194-2416156.

JAMMU

496. JAMKASH VEHICLEADES PVT LTD (3306-33-01), NH-1A, BYE PASS, OPP CHANNI HIMMAT, JAMMU - 180015
PH :0191-466681, 464304, 308.

497. JAMKASH VEHICLEADES PVT LTD (3306-33-02), NEAR GENERAL BUS STAND, OPP. PHE OFFICE, B.C. ROAD, JAMMU - 180001
PH :0191-2576235, 2543935, 2520323.

498. JAMKASH VEHICLEADES PVT LTD (3306-33-04), SUNJWAN, DISTT. JAMMU - 180011
PH :0191-2468504.
499. PEAKS AUTO JAMMU PVT. LTD (3310-33-01), GANGYAL INDUSTRIAL AREA, BEHIND COCA COLA FACTORY, JAMMU - 180010
PH :0191-2484813.
500. JAMMU MOTORS PVT. LTD (3308-33-01), 6, AKHNOOR ROAD, JAMMU. - 180001
PH :0191-2504746, 2552977, 2505183.
501. JAMMU MOTORS PVT. LTD (3308-33-02), PLOT NO.2, RAJPURA CHUNGI OPP AG OFFICE, AKHNOOR ROAD, JAMMU - 180002
PH :0191-2504746, 2552977, 2505183.

KATHUA

502. JAMMU MOTORS PVT. LTD. (3B02-3B-01), WARD NO.13, CHAK PARTAP SINGH HATLI MORH, NH1-A, KATHUA TEHSIL KATHUA - 184101
PH :7837613036.

KULGAM

503. PEAKS AUTO PVT. LTD. (OY01-OY-01), NEAR GRID STATION,MAIN ROAD, KULGAM - 191202
PH :1931-260030.

KUPWARA

504. JAMKASH VEHICLEADS(KASHMIR)PVT. LTD. (1205-AX-03), JAMKASH VEHICLEADES, NEAR GM FILLING STATION, DC OFFICE ROAD KUPWARA - 193223
PH :01955-253322.

LEH

505. DRUK AUTOZONE (9S01-9S-01), AIRPORT ROAD, LEH (LADAKH), DISTT. LADAKH, LEH - 194101
PH :01982-250005.

POONCH

506. JAMKASH VEHICLEADES PVT LTD (AAW1-AAW-01), VILLAGE KUNUYIAN, TEHSIL HAVELI POONCH, JAMMU & KASHMIR. - 185121
PH :1965-222972.

PULWAMA

507. PEAKS AUTO PVT. LTD. (1204-MU-03), MUGHAL ROAD, GUNGOO, PULWAMA - 192301
PH :01933-240226.

RAJOURI

508. JAMKASH VEHICLEADES PVT LTD (3306-KS-06), KALAKOTE ROAD, VILLAGE BADOL, RAJOURI - 185131
PH :01962-264973.

RS PURA

509. JAMKASH VEHICLEADES PVT LTD (3306-JN-03), GAGAIN MORTH, R S PURA, JAMMU, - 181102
PH :01923-251951.

SHOPIAN

510. PEAKS AUTO PVT. LTD. (AAA1-AAA-01), AGLAR SOFANAMAN, SHOPIAN - 192303
PH :0194-24666067.

SIDHRA

511. JAMKASH VEHICLEADES PVT LTD (CDL1-CDL-01), KHASRA NO.80 & KHATA NO.100, VILLAGE SIDHRA, NH1A, NEAR BHARAT PETROLEUM PETROL PUMP, TEH. & DISTT. JAMMU - 180019
PH :0191-2662024, 2662025, 2576235.

SRINAGAR

512. RAHIM MOTORS (1281-12-01), SIDGO INDUSTRIAL AREA, RANGRETH, SRINAGAR
PH :0194-2435909.
513. HIGHLAND AUTOMOBILES PVT.LTD (1202-12-01), SONWAR, SRINAGAR - 190001
PH :0194-452579, 479928.
514. JAMKASH VEHICLEADS(KASHMIR)PVT. LTD. (1205-12-01), HYDERPURA BY PASS CROSSING, SRINAGAR - 190015
PH :0194-2435576.
515. PEAKS AUTO PVT. LTD. (1204-12-01), BYE PASS ROAD, NH - 1A, NEAR HOTAL SILVER STAR, SRINAGAR - 191101
PH :0194-2130261.
516. JAMKASH VEHICLEADS(KASHMIR)PVT. LTD. (1205-12-05), NARBAL CROSSING, NH-1A, SRINAGAR, JAMMU & KASHMIR - 190017
PH :9419003372.

SUNDERBANI

517. PEAKS AUTO JAMMU PVT. LTD (AAM2-AAM-01), MOUZA THANDA PANI, TEH. SUNDERBANI - 185153
PH :1960-233119.

SURANKOTE

518. PEAKS AUTO JAMMU PVT. LTD (TY02-TY-01), NEAR KNIET KING FILLING STATION, BHARAT PETROLEUM, POONCH MUGHAL ROAD, SURANKOTE, DISTT: POONCH - 185101
PH :9018331442.

UDHAMPUR

519. J&K VEHICLEADES PVT. LTD. (D801-D8-01), NATIONAL HIGHWAY 1A, NEAR DAK BANGLOW, UDHAMPUR - 182101
PH :01992-76266.

JAMMU AND KASHMIR

AKHNOOR

520. JAMMU MOTORS (2X02-2X-01), MAIN ROAD DASKAL, TEHSIL – AKHNOOR, DISTRICT - JAMMU - 181201
PH :1924-252021, 9419109162.

HANDWARA

521. JAMKASH VEHICLEADES (BYA1-BYA-01), KHEWAT NO-31, KHATTA NO-298, SURVEY NO-3764/1816, MOZA BRARIPORA, TEH-HANDWARA, DIST- KUPWARA, J&K - 193221
PH :9419074012.

JAMMU

522. PEAKS AUTO JAMMU PVT. LTD. (3310-33-02), KHASRA NO.425 & 426, KHATA NO.425 & 426, TOPE SHRKHANIAN (BACKSIDE OF BEST PRICE), AKNOOR ROAD, JAMMU. - 180001
PH :0191-2484813, 9596620057.

JHARKHAND

BOKARO

523. HINDUSTAN AUTO AGENCY (B501-B5-02), R1, CITY CENTRE, SECTOR-4, BOKARO STEEL CITY, BOKARO - 827004
PH :06542-233690/ 9263631315.
524. HINDUSTAN AUTO AGENCY (B501-B5-03), M2, SECTOR-4, CITRY CENTRE, BOKARO STEEL CITY (JHARKHAND) - 827004
PH :9204796107.

DALTONGANJ

525. PREMSONS MOTORS UDYOG PVT LTD (5103-MP-02), KACEHRI ROAD, DALTONGANJ, PALAMU - 822101
PH :06562-9386768344.

DEOGHAR

526. RELIABLE INDUSTRIES (5202-KR-03), SHAHEED ASHRAM ROAD, JHAUNSAGARHI, DEOGHAR, - 814112
PH :06432-9431125332.

DHANBAD

527. RELIABLE INDUSTRIES (5202-52-01), KATRAS ROAD, DHANBAD, JHARKHAND. - 826001
PH :0326-301507, 301508,9431125332.
528. RELIABLE INDUSTRIES (5202-52-02), BEHIND PRABHAT KHABAR, AT: KOLAKUSMA, P.O K.G. ASHRAM, SARAIDHELA , DHANBAD - 828127
PH :326-8986749072.
529. RELIABLE INDUSTRIES (5202-52-06), SUGIADIH, HIRAK ROAD, SARAIDHELA, DHANBAD, JHARKHAND. - 828127
PH :9835830202.

DUMKA

530. RELIABLE INDUSTRIES (L701-L7-01), OPP DUDHANI PETROL PUMP, DEOGHAR-PAKUR ROAD,DUMKA (JHARKHAND) - 814101
PH :9708555924.

GHATSHILA

531. PEBCO MOTORS LTD. (AIA1-AIA-01), PLOT NO. 68, KHASRA NO.128, MAUZA PAORA, NH-33, NEAR FULL-DUNGRI CHOWK,GHATSHILA, EAST SINGHBHUM (JHARKHAND) - 832303
PH :06585-9308433388.

GIRIDIH

532. RELIABLE INDUSTRIES (5202-3D-04), MOHANPUR, PACHAMBA ROAD, GIRIDIH. - 815301
PH :06532-222969/ 9934205123.

GODDA

533. RELIABLE INDUSTRIES (5202-EJ-05), ASANBANI CHOWK, MAIN ROAD, GODDA. - 814133
PH :9431121479.

GUMLA

534. PREMSONS MOTOR UDYOG PVT. LTD. (5103-2O-04), VANASTHALI COMPLEX PUGUCHAMPA NAGAR,NH-23,SISAI ROAD,GUMLA - 835207
PH :06524-221117.

HAZARIBAGH

535. HINDUSTAN AUTO AGENCY (Y901-Y9-01), NEAR SBI MAIN BRANCH, MAIN ROAD, HAZARIBAGH. - 825301
PH :9263631324.
536. HINDUSTAN AUTO AGENCY (Y901-Y9-02), PLOT NO. 233 AND 234, MORANGI, THANA - MUFFASSIL NO. 257, HAZARIBAGH, JHARKHAND. - 825301
PH :9263631327, 9031098015.

JAMSHEDPUR

537. MOTOR WORLD (3102-31-01), N.H-33, NEAR PARDIH CHOWK, MANGO, JAMSHEDPUR - 831012
PH :0657-2360346, 2360347.
538. PEBCO MOTORS LTD. (3101-31-01), MEDIUM SECTOR, INDUSTRIAL AREA, ADITYAPUR, JAMSHEDPUR - 831001
PH :0657-409106, 107.
539. PEBCO MOTORS LTD. (3101-31-02), 16 BALICHALA, CONTRACTORS & GODOWN AREA, SONARI, JAMSHEDPUR - 831011
PH :9308433388.

JAMTARA

540. RELIABLE INDUSTRIES (BOX1-BOX-01), PLOT NO. 483, PARWAT BIHAR, DUMKA ROAD, JAMTARA, JHARKHAND. - 815351
PH :9835814404.

KHELARI

541. SUDHA BUSINESSS ENTERPRISES PVT. LTD. (CFO1-CFO-01), PLOT 113, MOUZA- BUKBUKA, BESIDE PAHADI MANDIR, KHELARI, RANCHI - 829205
PH :0651-6458222, 9534199997.

RAMGARH

542. HINDUSTAN AUTO AGENCY (AV01-AV-01), MARAR, RANCHI ROAD (NH-33), RAMGARH - 829122
PH :9263631320.

RANCHI

543. PODDAR MOTOR (P) LTD. (5181-51-01), 47, 48 , KOKAR INDUSTRIAL AREA, RANCHI.
PH :0651-2544661, 2542650.
544. PREMSONS MOTORS UDYOG PVT LTD (5103-51-01), 502, KANKE ROAD, RANCHI. - 834008
PH :0651-2231686, 9304807349.
545. PREMSONS MOTOR UDYOG PVT. LTD. (5103-51-03), 10/P, NAMKUM INDUSTRIAL ESTATE,BEHIND HIGH TENSION INSULATOR FACTORY, LOWER CHUTIA, RANCHI - 834010
PH :0651-3210400, 3190400/9304807354.
546. PREMSONS MOTOR UDYOG PVT. LTD. (5103-51-05), PLOT NO.31 & 134, JOHNSON MORH, TUPUDANA INDUSTRIAL AREA, TUPUDANA, RANCHI - 834003
PH :0651-6560180.
547. SUDHA BUSINESS ENTERPRISES PVT. LTD. (5107-51-02), PLOT NO. 74, OPPOSITE OTC GROUND, HEHAL, RATU ROAD, RANCHI, JHARKHAND - 834005
PH :9534199997.
548. SUDHA BUSINESS ENTERPRISES PVT. LTD. (5107-51-03), PLOT NO. 39, NEAR BOOTY MORE, RANCHI-RAMGARH ROAD, RANCHI. - 835217
PH :9534199997.

KARAIKAL

KARAIKAL

549. SHENBAKA CARS PVT. LTD. (CCF1-CCF-01), R. S. NO. 173/3PT, T. S. NO. 9/5, WARD, L-BLOCK, NO. 3, KARAIKAL NAGORE MAIN ROAD, VILLAGE - ODUTHURAI REVENUE, NERAVY COMMUNE, KARAIKAL MUNICIPALITY, KARAIKAL. - 609602
PH :4368-227800/1/2.

KARNATAKA

ANEKAL

550. PRATHAM MOTORS (0205-FA-04), SY#45/3, KAVAL HOSAHALLI, KASABA HOBLI, ANEKAL TALUK - 562106
PH :080-9343222764.

ANKOLA

551. BHARATH AUTO CARS PVT LTD (FC02-FC-01), NEAR NARAYANA TEMPLE KAKKAR MUTTA, BELEGULI CROSS, ANKOLA, UK DISTRICT - 581314
PH :08388-231330.

ATHANI

552. SHANTESHA MOTORS (BWA1-BWA-01), RS NO. 605, SHIVAYOGI NAGAR, BIJAPUR ROAD, ATHANI, DIST. - BELGAUM. - 591304
PH :8289-8884472587, 9538715071.

ATHRADI

553. ABHARAN MOTORS (G601-UK-04), HERABETTU ROAD ATHARDI UDUPI - 576107
PH :0820-6452061/2/3/4.

ATTIBELE

554. SURAKSHAA CAR CARE PVT. LTD. (BMM1-BMM-01), SURVEY NO.22/7/8, SARJAPUR MAIN ROAD, INDIABELE VILLAGE, OPP. TO GOLDEN LIBERTY, ATTIBELE P.O., BANGALORE. - 562107
PH :9449865665.

BAGALKOT

555. VIJAY MOTOWINGS (ZL01-ZL-01), 180/4-2,BELGUM RAICHUR ROAD,NEAR APMC MARKET YARD, BAGALKOT - 587103
PH :08354-2001193/94.

BANGALORE

556. BIMAL AUTO AGENCY INDIA PVT. LTD. (0216-02-01), 60/2, MAHADEVPURA, WHITE FIELD ROAD, BANGALORE - 560048
PH :080-30583361/2/3.
557. BIMAL AUTO AGENCY INDIA PVT. LTD. (0216-02-02), NO. 69/2, SARAKKI, KANAKAPURA ROAD, BANGALORE - 560078
PH :080-30482295/6/3/1.
558. BIMAL AUTO AGENCY INDIA PVT. LTD. (0216-02-03), NO.7/1, KALANAAGRAHARA VILLAGE, MOUNT ST. JOSEPH TRAINING COLLEGE FOR JESUITS COMPOUND, IIMB POST, BANNERGHATTA RD. , BANGALORE - 560076
PH :080-30280511/12.
559. BIMAL AUTO AGENCY INDIA PVT. LTD. (0216-02-04), 6TH CROSS, OFF OLD AIRPORT ROAD, HAL 2ND STAGE POST, BANGALORE - 560038
PH :080-30584638/41/42, 9845026252.
560. BIMAL AUTO AGENCY INDIA PVT. LTD. (0218-02-01), NO.- 60/3, VENKATALA VILLAGE, YELAHANKA HOBLI, BANGALORE NORTH TALUK - 560064
PH :080-30088801-09.
561. GARUDA AUTOCRAFT PVT LTD (0212-02-01), SURVEY NO. 13, 11TH KM., KANAKPURA ROAD, BANGALORE - 560062
PH :080-26322500/2/3.
562. GARUDA AUTOCRAFT PVT LTD (0212-02-02), 119/1, 11TH CROSS,MALLESHWARAM,BANGALORE, - 560003
PH :080-23460136/140/142.
563. KALYANI MOTORS (P) LTD (0211-02-01), MYSORE ROAD,PANTHARAPALYA,KENGRI HOBLI,BANGALORE - 583201
PH :080-28606004/05/06/07.
564. MANDOVI MOTORS PVT LTD (0201-02-01), 24/4,7TH MAIN,WILSON GARDENS,BANGALORE - 560027
PH :080-22233763.
565. MANDOVI MOTORS PVT LTD (0201-02-05), NO.2/106 (NEXT TO KASSIA BLDG.),17TH CROSS,MAGADI CHORD ROAD EXTN. VIJAYANAGAR,BANGALORE - 560079
PH :080-23400685.
566. MANDOVI MOTORS PVT LTD (0201-02-07), 17/A-2&3 IND.SUBURB.IIND STAGE, GORAGUNTEPALAYA, TUMKUR ROAD. YESWANTHPUR, BANGALORE - 560022
PH :080-23374130.
567. MANDOVI MOTORS PVT LTD (0201-02-08), NO. 70 SARAKKI INDUSTRIAL LAYOUT,J.P NAGAR,3RD PHASE, BANGALORE - 560078
PH :080-26589945 /26584363.
568. MANDOVI MOTORS PVT LTD (0201-02-0C), NO 1 TO 5, NAVODAYA HBSC, 4TH STAGE, 4TH MAIN, RAJAJINAGAR INDUSTRIAL TOWN, BASAWESHWAR NAGAR - 560044
PH :080-23158777/23159777.
569. MANDOVI MOTORS PVT LTD (0201-02-0D), 6/8, SHREE GANGA GARDEN, GANGA NILAYA, HENNUR CROSS, KALYANAGAR POST - 560043
PH :080-25445560/61.
570. PRATHAM MOTORS (0205-02-01), 16, BALLANDUR, SARJAPUR RING ROAD, BANGALORE - 560037
PH :080-41262929.
571. PRATHAM MOTORS (0205-02-02), STHANIKAM'S ARCADE, OPP. ST THERESA HOSPITAL, DR. RAJ KUMAR ROAD, A BLOCK,RAJAJINAGAR 2 STAGE, BANGALORE - 560010
PH :080-30141800.
572. PRATHAM MOTORS (0205-02-03), NO. 319 -324 ,QUEENS ROAD CROSS, BANGALORE. - 560001
PH :080-30741700.
573. RNS MOTORS (7301-02-03), 2275 TUMKUR ROAD, GURGUNTEPALYA, YESHWANTPUR, BANGALORE - 560022
PH :080-23474354-58.
574. RNS MOTORS (7301-02-04), HOSUR ROAD,BOMMANAHALLI,MADIVALA POST,BANGALORE - 560068
PH :080-24115901.
575. RNS MOTORS (7301-02-06), TUMKUR ROAD, NH-4, YESHWANTPUR, BANGALORE - 560022
PH :0836-43479803-15 /14.
576. SAGAR AUTOMOBILES (0203-02-01), 39/2 BANNERGHATTA ROAD,BYRASANDRA,BANGALORE - 560029
PH :080-30426063/2.
577. SAGAR AUTOMOBILES (0203-02-02), 28/1 KANAKPURA ROAD,BASANAVAGUDI,BANGALORE - 560004
PH :080-41204666.
578. SURAKSHAA CAR CARE PVT LTD (0280-02-01), 30/3 K AGRAHARA, HOSUR MAIN ROAD, ELECTRONIC CITY, BANGALORE
PH :080-28522222/3/4.
579. MANDOVI MOTORS PVT LTD (0201-02-9B), PLOT NO.-257/1-13, BANNERGHATTA ROAD, N.S. PALYA, BANGALORE - 560076
PH :080-26681323,26589945.
580. KALYANI MOTORS (KR PURAM) (0213-02-02), SY. NO.:58/1A & 61/22, AVALAHALLI, NH-4, K.R. PURAM, BANGALORE. - 560049
PH :080-33235000.
581. KALYANI MOTORS PVT. LTD. (0213-02-03), NO.129/4, KUNDALAHALLI VILLAGE, OPP. TO BROOKE FIELD HOSPITAL, BROOKFIELD, BENGALURU. - 574239
PH :080-40419000.
582. SURAKSHAA CAR CARE PVT. LTD. (0280-02-02), #54/1, BOMMANAHALLI, HOSUR MAIN ROAD, BANGALORE - 560068
PH :080-25732018.
583. KALYANI MOTORS PVT LTD (0213-02-04), 250/1,BILEKAHALLI, BANNERGHATTA ROAD, BENGALURUE - 560076
PH :080-803041911.
584. SURAKSHAA CAR CARE PVT. LTD. (0280-02-03), NO.64, POTHALAPPA GARDEN, LASHKAR BUILDING, HOSUR ROAD, ADUGODI, BANGALORE. - 560030
PH :08153-290299.
585. BIMAL AUTO AGENCY (0218-02-04), PLOT NO.37/38, 2ND STAGE, PEENYA INDUSTRIAL AREA, BANGALORE - 560058
PH :9945237213.
586. PRATHAM MOTORS (0205-02-05), #58/5 KUDLU VILLAGE, NEXT TO ZEE SCHOOL, SARJAPUR HOBLI, ANEKAL TALUK, BANGALORE - 560034
PH :080-30712020.

587. RNS MOTORS LIMITED (7301-02-0H), PLOT NO.129, KIADB INDUSTRIAL AREA, HEBBAGODI VILLAGE, BOMMASANDRA, JIGINI LINK ROAD, BANGALORE - 562158
PH :080-43110200.

588. GARUDA AUTOCRAFT PVT LTD (0212-02-03), 10/1, HEBBAL , AMANIKERE KASABA HOBLI, YOGESH NAGAR, BANGALORE - 560024
PH :080-23621332.

589. BIMAL AUTO AGENCY INDIA PVT. LTD. (0286-02-01), #184/185, OPP. FORUM VALUE MALL, WHITE FIELD MAIN ROAD, BANGALORE - 560066
PH :080-30693069.

590. SURAKSHAA CAR CARE PVT. LTD. (0280-02-04), PLOT NO. 8 & 9, NEXT TO BDA COMPLEX, 4TH BLOCK, 100 FT ROAD, KORAMANGALA, BANGALORE, KARNATAKA - 560034
PH :080-25529009/10/01.

591. KALYANI MOTORS PVT LTD. (0287-02-01), # 10/5, NAGADEVANHALLI, KENGERI, MYSORE ROAD, BANGALORE, KARNATAKA - 560056
PH :080-30036333.

592. MANDOVI MOTORS PVT LTD (0201-02-0G), NO. 42/2, CENTRAL STREET, NEXT TO SANGEETH THEATRE, SHIVAJI NAGAR, BANGALORE, KARNATAKA - 560003
PH :9731407344.

593. BIMAL AUTO AGENCY INDIA PVT. LTD. (0216-02-06), PLOT NO. 82, DODDA BANASWADI MAIN ROAD, BEHIND IOC PETROL PUMP, NEXT TO AIYAPPA TEMPLE, BANASWADI, BANGALORE, KARNATAKA - 560033
PH :080-41143168.

594. MANDOVI MOTORS PVT LTD (0201-02-0H), BBMP NO.4C, WARD NO.83, JOLLY ESTATE, OLD MADRAS ROAD, NAGAWARAPALYA, BANGALORE - 560093
PH :080-25341144/77.

595. KALYANI MOTORS PVT. LTD. (0213-02-05), PLOT NO. 74/5, HORMAVU MAIN ROAD, NEAR BBMP OFFICE, KR PURAM HOBLI, BANGALORE. - 560043
PH :080-9900599946.

596. KATARIA AUTOMOBILES PVT. LTD. (0294-02-01), NO. 5, 15TH CROSS, KOLANDAPPA GARDEN, ANEPALYA, POST – AADUGODI, BANGALORE. - 560030
PH :080-9998086020.

597. MANDOVI MOTORS PVT. LTD. (0201-02-0I), KATHA NO.4, SITUATED AT GANAKAL DHAKALE, SRINIVASPURA, KENGERI HOBLLI, UTTARAHALLI, BANGALORE - 560060
PH :9945235516.

598. MANDOVI MOTORS PVT LTD (0201-02-0E), SY NO:26,AMBLIPURA VILLAGE,VATHUR HOBLI,BANGALORE,EAST TALUKA. - 560102
PH :080-25747764/76/62/63/64.

599. RNS MOTORS (7301-02-0G), 106/7, BELLARY ROAD, NEAR IOC PETROL BUNK, AMRUTHAALLI, NEAR HEBBAL FLYOVER, BENGALURU (KARNATAKA) - 560092
PH :080-23534286.

600. VARUN MOTORS PVT. LTD. (0292-02-01), HNO. 72/19-6 & HNO. 67/2, YESHWANTPUR INDUSTRIAL SUBURB, WARD NO. 10, RAJAJI NAGAR, BANGALORE. - 560022
PH :080-23085555, 9985344244.

601. VARUN MOTORS PVT. LTD. (0292-02-02), BEARING NO. 27/1 & 27/2, SURVEY NO. 41/3 & 42/7 BAGALAGUNTA, HESSARGHATTA MAIN ROAD, NEAR WIDIA SCHOOL BUS STOP, NAGASANDRA POST, BANGALORE. - 560073
PH :7338286729.

BANGARPET

602. SURAKSHA CAR CARE PVT. LTD. (OR04-OR-01), 180/4 OPP. APMC YARD, KOLAR-BANGARPET ROAD, BANGARPET (KARNATAKA) - 563114
PH :082153-290299.

BANTWAL

603. MANDOVI MOTORS PVT LTD (TR01-TR-01), NH-75, PANEMANGALORE, B.C. ROAD, BANTWAL, KARANATAKA - 574231
PH :080-2410123.

BELGAUM

604. SHANTESHA MOTOR (P) LTD (E801-E8-01), MUJAWAR COMPOUND,NEHRU NAGAR,BELGAUM, - 590010
PH :0831-2473308/4204523/2476162.

605. SHANTESHA MOTOR (P) LTD (E801-E8-03), PLOT NO. 5,AZAMNAGAR,BELGAUM, - 590006
PH :0831-2470871.

606. SHANTESHA MOTOR (P) LTD (E801-E8-04), PLOT NO. 8, SURVEY NO. 251/51, HAVLOCK ROAD CAMP, BELGAUM - 290010
PH :0831-2425001/2.

BELLARY

607. K P F PVT. LTD (G201-G2-01), P.B. NO. 58,BELLARY HOSPET ROAD,ALLIPURA,BELLARY - 583101
PH :08392-237666/685.

608. K P F PVT. LTD (G201-G2-03), 1ST CROSS, OPP. WOMAN'S COLLEGE, BESIDE CS MULTI SPECIALITY HOSPITAL, BELLARY. - 583103
PH :08392-258900.

BELTHANGADY

609. BHARATH AUTO CARS PVT LTD (4503-HM-04), MAIN ROAD, BELTHANGADY, BELTHANGADY TALUK DK DISTRICT - 574214
PH :08256-234130.

BHATKAL

610. BHARATH AUTO CARS PVT LTD (CEF1-CEF-01), SURVEY NO. 157/2A, SUSGADI VILLAGE, NH66, BHATKAL, UTTARKANNADA DISTRICT, KARNATAKA. - 581320
PH :8382-9448979530.

BIDAR

611. LAHOTI MOTORS PVT. LTD. (EX01-EX-01), SI 50/51,PRATAP NAGAR, UDGIR ROAD, KIADB INDUSTRIAL AREA, NAUBAD, BIDAR - 585402
PH :08482-232975.

BIJAPUR

612. RNS MOTORS (7301-T7-0I), SURVEY NO.25K/1, CHITRADURGA SHOLAPUR ROAD, VIJAYPURA, BIJAPUR DISTT. KARNATAKA - 586109
PH :08352-242821.

BYNDOOR

613. ABHARAN MOTORS PVT. LTD. (BUH1-BUH-01), 3-256 & 3-257, SOUPARNIKA COMPLEX, NH 66, VILLAGE - YEDATHRE, BYNDOOR, KUNDAPUR TALUK, UDUPI DISTT. - 576214
PH :08254-7899751777.

CHAMRAJ NAGAR

614. MANDOVI MOTORS PVT. LTD. (0E01-0E-01), RAJ KAMAL BUILDING, SATHYAMANGALA ROAD, KUVEMPU EXTENSION, CHAMRAJNAGAR (KARNATAKA) - 571313
PH :08226-222857/858.

CHANNAGIRI

615. SHRUTI MOTORS (BUQ1-BUQ-01), SURVEY NO.5, MACHANAYAKANAHALLI, OPP. FIRE STATION, CHITRADURGA ROAD, N.H.13, CHANNAGIRI DISTT. DAVANGERE - 577213
PH :08189-7899934143.

CHANNAPATNA

616. KALYANI MOTORS PVT LTD (BSX1-BSX-01), PROPERTY NO.58, MALUR GRAMA, MALLUR HOBLI, CHANNAPATNA TALUKA RAMANAGARA DISTRICT - 562160
PH :080-28078999.

CHANNARAYAPATNA

617. VENKAT MOTORS (HC01-HC-01), PLOT NO. 389, 36/3, 132/1, BESIDES THIRUMALA RICE MILL, MYSORE ROAD, CHANNARAYAPATNA, DISTRICT: HASSAN, KARNATAKA. - 573116
PH :08172- 256622, 09844377477.

CHICKBALLAPUR

618. BIMAL AUTO AGENCY INDIA PVT. LTD. (KJ02-KJ-01), NO. 169/1, AMMANI KANDAVARAKERE VILLAGE, KASABA HOBLI, CHIKBALLAPURA DISTRICT - 562101
PH :08156-300500/02/1.

CHIKMANGALORE

619. SHRUTI MOTORS (B701-3F-02), AIT CIRCLE, KM ROAD, CHIKMANGALUR - 577102
PH :08262-221183;221184.

CHIKODI

620. SHANTESHA MOTORS (E801-ZB-05), OPP. IOC PUMP, NEAR B.K.COLLEGE, MIRAJ ROAD, CHIKKODI, KARNATAKA - 591201
PH :08338-273120,272744.

CHINTAMANI

621. PRATHAM MOTORS PVT. LTD (0205-BQ-06), SURVEY NO. 33, NEXT TO VIJAYA P U COLLEGE, OPP. GOPASANDRA LAKE, SREENIVASPURA MAIN ROAD, CHINTAMANI, KARNATAKA - 563125
PH :7899761301.

CHITRADURGA

622. SAKETH AUTOMOBILES (AL01-AL-01), NEAR VEDA COMPLEX, NH-4, M H ROAD, CHITRADURGA - 572130
PH :08132-221414.

DAVANGERE

623. SHRUTI MOTORS (S101-S1-01), NEAR PANCHDEVASTHANA, P. B. ROAD, DAVANGERE, KARNATAKA - 577004
PH :08192-9663377655.

DEVANAHALLI

624. BIMAL AUTO AGENCY (WH01-WH-01), SURVEY NO.241/114/6, 11TH WARD, BB ROAD, DEVANAHALLI, BANGALORE DISTT: - 562110
PH :080-27681778.

DHARWAD

625. REVANKAR MOTORS PVT. LTD. (BIX1-BIX-01), SURVEY NO.1, PLOT NO. 10, OLD PB ROAD, OPP. KVG BANK, SAYDAPUR VILLAGE, DHARWAD, KARNATAKA - 580001
PH :0836-2444666.

GADAG

626. RNS MOTORS (7301-RK-0E), PLOT NO. 64, DIAGONALLY OPP. REGIONAL TRANSPORT OFFICE, HUBLI GADAG MAIN ROAD, GADAG - 582103
PH :08372-230072,230076.

GANGAWATHI

627. MUNEER CARS (N701-KA-03), JAGANMATHA COMPLEX,RAICHUR ROAD,GANGAVATI, - 583227
PH :08533-270055.

GAURIBIDANUR

628. MANDOVI MOTORS PVT LTD (BUY1-BUY-01), NO.592/522, E DIVISION, OPP. PUSHPANJALI TALKIES, B.H. ROAD, GAURIBIDANUR TOWN, DISTT. CHIKBALLAPUR - 561210
PH :9945235531.

GOKAK

629. SHANTESHA MOTORS PVT LTD (IR01-IR-01), RS NO.106/3D/2A, APMC ROAD, GOKAK, BELGAUM DISTT. - 591307
PH :08332-226006.

GONIKOPPAL

630. MANDOVI MOTORS PVT LTD (2501-U3-07), KAIKERY VILLAGE,GONIKOPPAL,, - 571213
PH :08274-279801.

GULBARGA

631. LAHOTI MOTORS (E902-E9-01), LAHOTI GARDENS,NEAR KMF, HUMNABAD ROAD,GULBARGA - 585104
PH :08472-258142.

HAGARIBOMMANAHALLI

632. MUNEER CARS (A UNIT OF MUNEER ENTERPRISES PVT. LTD.) (BUX1-BUX-01), SITE NO.112A/2 & 112A/3, BLOCK NO.2, WARD NO.:3, HAGARIBOMANAHALLI PANCHAYAT, BELLARY DISTRICT. - 583212
PH :08394-266227.

HASSAN

633. VENKAT MOTORS (C802-C8-01), NO. 326, HASSAN GROWTH CENTRE, H.N. PURA ROAD, HASSAN - 573201
PH :08172-243405/404.

HAVERI

634. REVANKAR MOTORS PVT LTD (BBM1-BBM-01), NEAR TMAE SOCIETY CAMPUS, IJARILAKAMAPUR, PB ROAD, HAVERI - 581110
PH :08375-235900.

HOSKOTE

635. BIMAL AUTO AGENCY INDIA PVT. LTD. (0216-SM-05), NO. 205/108, SITUATED AT HOSKOTE TALUK, KASABA HOSKOTE TOWN, DISTT.- BANGALORE - 562114
PH :080-8111398104.

HOSPET

636. MUNEER CARS (N701-N7-01), BELLARY ROAD,SANKLAPUR,HOSPET , - 583203
PH :08394-266226.

HUBLI

637. RNS MOTORS (7301-73-01), PUNE - BANGALOR ROAD, UNKAL, HUBLI - 580025
PH :0836-2271825/2271239.

638. RNS MOTORS (7301-73-0F), GOKUL ROAD MUREDESHWAR BHAVAN , HUBLI - 580030
PH :0836-2236051/52.

639. REVANKAR MOTORS PVT LTD (7303-73-01), CTS NO.165/A, WARD NO.III, DESHPANDE NAGAR, HUBLI (KARNATAKA) - 580029
PH :0836-6613332.

KADABA

640. MANDOVI MOTORS PVT LTD (BYE1-BYE-01), SURVEY NO.-11/20, KALARA, KADABA POST, DAKSHIN KANNADA DISTT., KARNATAKA - 574221
PH :08251-260351.

KADUR

641. SHRUTI MOTORS (BQS1-BQS-01), SHOP NO. 1 & 2, DAGA COMPLEX, ULUKINAKALLU, NEAR PEARLS CLUB, B.H. ROAD, KADUR, DISTRICT – CHIKMAGALUR. - 577548
PH :7022007621.

KANAKAPURA

642. KALYANI MOTORS PVT. LTD. (BXY1-BXY-01), SURVEY NO. 447/1B, KASABA HOBIL, BUDIGUPPE GRAMA, TALUKA- KANAKAPURA, DISTRICT- RAMANAGARA. KARNATAKA. - 562117
PH :9900050130.

KARKALA

643. ABHARAN MOTORS (G601-HY-03), NH-13, MANGALORE KUDREMUKH ROAD, PULKERI, KARKALA - 574104
PH :08258-233055;233085.

KARWAR

644. BHARATH AUTO CARS PVT LTD (8J01-8J-01), SURVEY NO. 459/2B, 456/2B AND 456/3, CHITTAKULA VILLAGE, KARWAR TALUKA, UTTARKANNADA DISTRICT, KARNATAKA. - 581301
PH :08382-265530.

KENGERI

645. KALYANI MOTORS (P) LTD (0211-HP-03), RV COLLEGE,KENGERI,BANGALORE.,,, - 560059
PH :080-28607057.

KOLAR

646. MANDOVI MOTORS PVT LTD (0201-QU-0F), 67/3 BANGALORE-CHENNAI HIGHWAY, KONDARAJANA HALLI, OPP HOTEL SHANTHI SAGAR, KOLAR. - 563101
PH :8152-210077.

KOPPAL

647. KPF PVT LTD (ER01-ER-01), SL. 283/10, NEAR MINI VIDHAN SOUDHA, KOPPAL HOSPET ROAD NH63, KOPPAL - 583238
PH :08539-225500.

KUMTA

648. BHARATH AUTO CARS PVT LTD (AFA2-AFA-01), MALLYA'S COMPOUND, NH-66, ALVEKODI KALBAGH VILLAGE, KUMTA (KARNATAKA) - 581334
PH :08386-223330.

KUNDAPUR

649. ABHARAN MOTORS (G601-CY-02), NH-17, THAKKATTE, KUNDAPURA - 272877
PH :08254-272877.

KUNIGAL

650. SAKETH AUTOMOBILES (VQ01-VQ-01), NEAR KRS AGRAHARA,BM ROAD, KUNIGAL, TUMKUR DISTRICT, KARNATAKA - 572130
PH :08132-221414.

KUSHAL NAGAR

651. MANDOVI MOTORS (VN01-VN-01), SY NO:88,MADAPATANA,KUSHAL NAGAR,SOMVARPUR,NORTH KODAGU, KARNATAKA - 571234
PH :08276-272365,273365.

LINGASUGUR

652. MUNEER CARS (A UNIT OF MUNEER ENTERPRISES PVT. LTD.) (BOQ1-BOQ-01), PLOT NO. 11, BASAMMA COMPLEX, RAICHUR ROAD, LINGSUGUR, RAICHUR, KARNATAKA - 584122
PH :8532-251555.

MADIKERI

653. FRIENDLY MOTORS (INDIA) PVT. LTD. (2502-QX-02), BASAPPA THEATURE BUILDING, DASAWAL ROAD,MADIKERI KODAGU DISTRICT. - 571201
PH :08272-222900, 9741785533,9741785588.

MANDYA

654. MANDOVI MOTORS PVT LTD (2501-BD-06), 1660/A, KALLAHALLI EXTENSION, M.C. ROAD, - 571401
PH :08232-230260.

MANGALORE

655. BHARATH AUTO CARS PVT LTD (4503-45-01), NH-17, KUNTIKAN JUNCTION, DEREBAIL, NEAR A.J. HOSPITAL, MANGALORE - 575004
PH :0824-2223030.

656. MANDOVI MOTORS PVT LTD (4502-45-01), ARVIND BUILDING, BALMATTA ROAD, HAMPANKATTA, MANGALORE - 575001
PH :0824-2410123, 2410128.

657. MANDOVI MOTORS PVT LTD (4502-45-03), NO., HASSAN GROWTH CENTRE,ADYAR,N.H. -48,,MANGALORE - 575007
PH :0824-2275123.

658. MANDOVI MOTORS PVT LTD (4502-45-07), BALLAL INDUSTRIAL ESTATE, YAYYADI, MANGALORE,KARNATAKA - 575008
PH :0824-3194123.

659. BHARATH AUTO CARS PVT LTD (4503-45-06), PLOT NO. 290/1, 291/1, KODIALBAIL VILLAGE, NEXT TO BHARATH BEEDI WORKS PVT. LTD., BUNTS HOSTEL, KADRI ROAD, MANGALORE, KARNATAKA - 575002
PH :0824-222330.

660. MANDOVI MOTORS PVT LTD (4502-45-08), DOOR NO. 2-63/4, SUJITH BAGH LANE, YEYYADE, MANGALORE, DISTRICT – DAKSHINA KANNADA, KARNATAKA - 575002
PH :0824-2985123.

MUDBIDRI

661. BHARATH AUTO CARS PVT LTD (4503-HN-03), BHARATH BEEDI COMPOUND, NEAR ALVAR'S HOSPITAL, MOODBIDRI - 574227
PH :08258-238630.

MULKI

662. BHARATH AUTO CARS PVT LTD (4503-QV-05), BHARATH BEEDI COMPOUND, NH-17 MULKI - 574154
PH :0824-2293030.

MURUDESHWAR

663. RNS MOTORS (7301-T8-02), NH-17, MANGALORE-BOMBAY ROAD, MURUDESHWAR, KARNATAKA - 581350
PH :08385-260295/96/97.

MYSORE

664. FRIENDLY MOTORS (2502-25-01), MANATHAVADI ROAD, VIDYARANYA PURAM, MYSORE - 570008
PH :0821-4005200.

665. MANDOVI MOTORS PVT LTD (2501-25-05), NO.182/145/C, BANNUR ROAD, SIDHARTHA NAGAR, MYSORE, KARNATAKA - 570011
PH :0821-4244417 /4000001.

666. MANDOVI MOTORS PVT LTD (2501-25-08), 217/2,, HUNSUR ROAD, HINKAL POST, MYSORE, KARNATAKA - 570017
PH :0821-4009900.

667. MANDOVI MOTORS PVT LTD (2501-25-01), NO: 5 K.R.S.ROAD, MYSORE - 570005
PH :0821-4240000.

NANJANGUD

668. FRIENDLY MOTORS (BYK1-BYK-01), 4340/4159/4, HULLAHALLI ROAD, NANJANGUD, DISTRICT – MYSORE, KARNATAKA. - 571301
PH :8221-297444, 7259255558.

NELAMANGALA

669. RNS MOTORS LIMITED (BBH1-BBH-01), NO.167/2, TUMKUR ROAD, KASABA HOBLI, NH4, NELAMANGALA, BANGALORE RURAL DT., BENGALURU, KARNATAKA - 562123
PH :080-27700245.

PUTTUR

670. BHARATH AUTO CARS PVT LTD (4503-CZ-02), NEAR RAIWAY STATION, HARADY, PUTTUR - 517583
PH :08251-230230.

RAICHUR

671. MUNEER CARS (N701-3K-02), #12-10-64,GOUSHAL ROAD,SIYA TALAB AREA,RAICHUR - 584101
PH :08532-9449870774.

RAMANAGARAM

672. KALYANI MOTORS (P) LTD (0211-JB-02), #K1318/2034C,OPP TO ROTARY HOSPITAL,BM ROAD, RAMNAGARAM - 571511
PH :080-27275991/2/3/4.

SAGAR

673. SHRUTI MOTORS (WF01-WF-01), BESIDE H GANAPATHIYAPPA PETROL BUNK (BP), B H ROAD, NH-206, SAGAR, SHIMOGA DISTT. - 577401
PH :08183-222123.

SHIMOGA

674. SHRUTI MOTORS (B701-B7-01), K.NO 599, SHANKARMUTT ROAD, SHIMOGA - 577201
PH :08182-277976.
675. SHRUTI MOTORS (B701-B7-03), BLOCK L-1, INDUSTRIAL ESTATE, BEHIND HP PETROL BUNK, SAGAR ROAD, SHIMOGA. - 577204
PH :08182-250177,277976.
676. SHRUTI MOTORS (B701-B7-05), SURVEY NO. 41/3 & 41/4, HONNALI ROAD, SHANTHI NAGAR, SHIMOGA.
PH :08182-9845399367.

SIDDAPUR

677. BHARATH AUTO CARS PVT. LTD. (BPY1-BPY-01), SURVEY NO. 211, NEAR IOCL PETROL BUNK, JOG ROAD, VILLAGE – HOSUR, TALUK – SIDDAPUR, DISTRICT – UTTARA KANNADA. - 581355
PH :581355, 9448979530.

SINDHANUR

678. KPF MOTORS PVT LTD (FX01-FX-01), SURVEY NO. 755/1, DOOR NO. 6-1-216/3 WARD NO. 19, GANGAVATHI ROAD, SINDHANUR, RAICHUR, KARNATAKA - 584128
PH :08535-221299.

SIRSI

679. RNS MOTORS (7301-MQ-0D), K H B COLONY, SIRSI - 581402
PH :08384-234854.

SULLIYA

680. MANDOVI MOTORS PVT LTD (4502-EW-04), ODABAI SULLIA,MANGALORE MYSORE ROAD,KARNATAKA - 574239
PH :08257-232325;232317.

SURATHKAL

681. MANDOVI MOTORS PVT LTD (4502-7G-02), KANA ROAD, SURATHKAL - 574158
PH :0824-4256987/4258899.

THOKOTU

682. BHARATH AUTO CARS PVT LTD (QW01-QW-01), NH-66, KAPIKAD, ULLAL,THOKOTTU, DAKSHINA KANNADA DISTT. - 575017
PH :0824-2464630.

TIPTUR

683. SAKETH AUTOMOBILES (H101-HV-03), BANDIHALLI INDUSTRIAL ESTATE, N.H.:206, TIPTUR, KARNATAKA - 572201
PH :08134-253663.

TUMKUR

684. SAKETH AUTOMOBILES (H101-H1-01), SIRA ROAD, TUMKUR - 572106
PH :0816-2256433/66.

UDUPI

685. ABHARAN MOTORS (G601-G6-01), N.H. 17, NITTUR, UDUPI - 576103
PH :0820-6454111/222/333/777.
686. ABHARAN MOTORS PVT. LTD. (G601-G6-05), N0. 305/1C, DOOR NO. 5-51A, RAILWAY STATION ROAD, INDRALI, UDUPI, DISTT. - UDUPI . - 576101
PH :9845242777.

UJIRE

687. BHARATH AUTO CARS PVT LTD (BWT1-BWT-01), SURVEY NO.237-2B1, MANGALORE-CHARMADY ROAD, NEAR INDIAN OIL PETROL PUMP, SAMPIGE NAGAR, UJIRE, BELTHANGADY TALUKA, DISTT. DAKSHINA KANNADA, KARNATAKA. - 574240
PH :8256-234230, 9986503030.

UPPINANGADI

688. MANDOVI MOTORS PVT LTD (4502-NL-05), NR.PADMA VIDYA IOC PETROL STATION-34, NEKKILADY, UPPINANGADY - 574241
PH :08251-252123/128/129.

VITTLA

689. MANDOVI MOTORS PVT. LTD. (CCE1-CCE-01), DOOR NO. 1-287 (9), JISHAN COMPLEX, VITTAL TOWN, TALUKA – BANTWAL, DISTRICT – DAKSHIN KANNADA - 574243
PH :8255239123.

KERALA

ADOOR

690. INDUS MOTOR CO. PVT. LTD. (2702-CJ-0A), M. C. ROAD, MITHRAPURAM, ADOOR, PATHANMTHITTA - 689518
PH :04734-9745998303.
691. AVG MOTORS LTD. (Y501-CJ-02), KOTTAMUKAL, K.P. ROAD, ADOOR PO, PATHANAMTHITTA, KERALA - 691523
PH :04734-9446355900.

ALAPPUZA

692. HERCULES AUTOMOBILES INTERNATIONAL (P) LTD (E501-E5-01), CCSB ROAD, CHUNGAM, ALLEPPY, - 688011
PH :477-9847580000.
693. HERCULES AUTOMOBILES INTERNATIONAL (P) LTD (E501-E5-03), PATHIRAPALLY, NH-47, ALAPPUZA - 688521
PH :0477-9747022412.

ALATHUR

694. BRD CAR WORLD PVT LTD (BRW1-BRW-01), SURVEY NO. 456/8, 455/8, 455/9, ERATTUKKULAM, KATTUSSERY VILLAGE, ALATHUR TALUKA, PALAKKAD DISTRICT, KERALA - 678682
PH :9745634999.

ALUVA

695. BRD CAR WORLD LTD. (A404-CBQ-09), RE SURVEY NO.330/7, NH-47, KUNNUMPURAM, PO-DESHAM PANCHAYATH, CHENGAMANAD, ALUVA. - 683102
PH :0484-8589094913.

ANGAMALY

696. INDUS MOTOR CO. PVT. LTD. (2702-JW-0F), ANGAMAALY KALADY ROAD, MC ROAD, ANGAMALY - 683572
PH :9745998434.
697. POPULAR VEHICLES & SERVICES LTD. (2701-JW-0D), 182-AIRPORT JUNCTION NAGAR,M. C. ROAD,ANGAMALY - 683572
PH :8086898002.

ATTINGAL

698. POPULAR VEHICLES & SERVICES LTD. (1601-SX-07), PALAMKONAM, PERUNKULAM,VIA-.ALAMCODE, ATTINGAL - 695102
PH :8086078788.

BALARAMAPURAM

699. POPULAR VEHICLES & SERVICES LTD. (1601-AQA-11), POOVAR ROAD, VAZHIMUKKU, BALARAMAPURAM P.O., TRIVANDRUM DISTRICT - 695501
PH :0471-8943345922.

CALICUT

700. INDUS MOTOR CO. PVT. LTD. (4701-47-01), MARUTI WORKSHOP, PANIKKER ROAD, CALICUT, NADAKKAVE - 673011
PH :0495-9745998019.
701. INDUS MOTOR CO. PVT. LTD. (4701-47-06), KOYA ROAD JUNCTION, PUTHIYANCADI, POST WEST HILL, CALICUT - 673005
PH :0495-9745998020.
702. INDUS MOTOR CO. PVT. LTD. (4701-47-08), NEAR STEEL COMPLEX, NALLALAM, CALICUT - 673655
PH :0495-9745998018.
703. POPULAR VEHICLES & SERVICES LTD. (4702-47-02), BEHIND MIMS, EASWARAMANGALAM ROAD, GOVINDAPURAM P.O., CALICUT - 673016
PH :0495-8086078650.
704. POPULAR VEHICLES & SERVICES LTD. (4702-47-07), NH-17 BYE PASS,PACHAKKIL, MALAPARAMBU P.O., KOZHIKODE, CALICUT - 673009
PH :8086078651.

CHALAKUDI

705. BRD CAR WORLD (ZJ02-ZJ-01), MURINGOOR P.O., CHALAKUDY - 680316
PH :0480 -9567869239.

CHALLAKUDDY

706. POPULAR VEHICLES & SERVICES LTD. (2701-8U-0C), OPPSITE CCMK HOSPITAL, VELLIKULAM ROAD, CHALAKUDY, KERALA - 680307
PH :9946104653.

CHANGARAMKULAM

707. A M MOTORS (VH01-VH-01), MELE MANTHADAM, ALANKODE, P.O., CHANGARAMKULAM, MALAPPURAM DISTT, KERALA - 679585
PH :9895756008.

CHAVAKAD

708. BRD CAR WORLD LTD. (A404-0J-06), ORUMANAYOOR P.O.CHAVAKKAD, DISTRICT-THRISSUR - 680512
PH :9645963999.

CHENGANNUR

709. SARATHY AUTO CARS (C701-UL-06), PRAVUMKOOD, THIRUVANVANDOOR P.O. CHENGANNUR TALUK, ALAPPUZHA (DIST) - 689124
PH :9947270665.

CHERPULASSERY

710. KVR AUTO CARS PVT LTD (NB01-NB-01), SURVEY NO. 154/4, RS NO. 154/4, VILLAGE – CHERUPPALASSERY, TALUK – OTTAPPALAM, DISTRICT – PALAKKAD - 679503
PH :04662-9747020582, 280100.

CHERTHALA

711. INDUS MOTOR CO. PVT. LTD. (VL03-VL-01), OPPOSITE TO S.N. COLLEGE, S.N. PURAM P.O., KANJIKKUZHI,CHERTHALA, ALAPPUZHA-DIST. - 688552
PH :9745997633.

CHINGAVANAM

712. HERCULES AUTOMOBILES INTERNATIONAL (P) LTD (I601-I6-01), SURVEY NO.290/9, 290/9/2, MAVILANGU KARA, CHINGAVANAM P.O., DISTT. KOTTAYAM (KERALA) - 686531
PH :9847315969.

CHULLIMANOOR

713. HERCULES AUTOMOBILES INTERNATIONAL (P) LTD (BAI1-BAI-01), RE-SURVEY NO. 43/7, VILLAGE – ANAND, TALUKA – NEDUMANGAD, DISTRICT – TRIVANDRUM, KERALA. - 695541

COCHIN

714. INDUS MOTOR CO. PVT. LTD. (2702-27-02), BEHIND COMMERCIAL SALES TAX, M.G. ROAD, COCHIN, - 682015
PH :484-9745998040.
715. INDUS MOTOR CO. PVT. LTD. (2702-27-09), PALARIVATTOM KAKANAD ROAD, KAKANAD, COCHIN, - 682030
PH :0484-9745998013.
716. POPULAR VEHICLES & SERVICES LTD. (2701-27-01), PERANDOOR ROAD, PUNNAKAL, ELAMAKKARA, COCHIN - 682025
PH :0484-9846017725.
717. POPULAR VEHICLES & SERVICES LTD. (2701-27-04), NEAR LISI HOSPITAL, OPP. IMA BLOOD BANK, COCHIN, - 682018
PH :9846498616.
718. SAI SERVICE PVT. LTD. (2705-27-01), 50/1 15L, ,CHERANALLOOR ROAD,EDAPPALLY,COCHIN - 682024
PH :484-9645106195.
719. SAI SERVICE PVT. LTD. (2705-27-02), NH-47,,PATHADIPALAM,EDAPPALLY,COCHIN - 682024
PH :9645105057.
720. INDUS MOTOR CO. PVT. LTD. (2702-27-0H), LAKSHMI DIARY CAMPUS, OPP-HOTEL SILVER SAND ISLAND, VYTILA, COCHIN - 682019
PH :9745992070.
721. SAI SERVICE PVT. LTD. (2705-27-08), KETTEZHUTHUM KADAVU, INTUC JUNCTION, NETTOOR, ERNAKULAM, COCHIN (KERALA) - 682040
PH :9645106339.
722. GEORGE MAIJO AUTOMOBILES PVT. LTD. (2709-27-01), DOOR NO.5/452, 5/452A, 5/453, OLD ELOOR ROAD, ELOOR JUNCTION, NORTH KALAMASSERY, DISTRICT - ERNAKULAM, COCHIN. - 683104
PH :0484-7559997864, 4237700.

EDAPPAL

723. POPULAR VEHICLES & SERVICES LTD. (4702-AM-05), KOZHIKODA ROAD, KAVILPADY, EDAPPAL, MALAPPURAM - 679582
PH :9946104680.

ERNAKULAM

724. AUTOTEAM SALES & SERVICES PVT.LTD (2781-27-01), PIPELINE ROAD, PADIVATTOM, COCHIN, ERNAKULAM, COCHIN
PH :9847521112.

FORT KOCHI

725. SAI SERVICE PVT. LTD. (BRS1-BRS-01), PLOT NO.83/1,2 OPPOSITE TO KUMAR PETROL PUMP, STATUE ROAD, CHULLIKKAL POST, FORT KOCHI - 682005
PH :9645106138.

IRINJALAKUDA

726. BRD CAR WORLD LTD. (A404-KQ-05), KARUPADANNA P.O., IRINJALAKUDA, THRISSUR - 680670
PH :9539006999.

IRITTY

727. INDUS MOTORS CO. PVT. LTD. (RO02-VJ-02), SURVEY NO. 48, BUILDING NO. 214, PERUPARAMBA, IRITTY, KANNUR, KERALA - 670703
PH :9747554929.

KAIPAMANGALAM

728. SAI SERVICE PVT. LTD. (2705-RP-07), VAZHIYAMBALAM PO, KAIPAMANGALAM,THRISSURE - 680681
PH :9645105053.

KALAMASSERY

729. INDUS MOTOR CO. PVT. LTD. (2702-Q3-07), KALAMASSERY, ALUVA WEST, ERNAKULAM DIST, KERALA - 683106
PH :0484-9745998012.

KALLAMBALAM

730. HERCULES AUTOMOBILES INTERNATIONAL (P) LTD (1603-QZ-04), DOOR # MP/2/500, KAVALAYOOR PANCHAYAT, KALLAMBALAM, CHIRAYINKEEZHU TALUKA, TRIVANDRUM - 695605
PH :8086079100.

KALPETTA

731. INDUS MOTOR CO. PVT. LTD. (4701-JE-0C), MEENANGADI, KAKKAVAYAL P.O., NORTH KALPETTA,WAYAND - 673591
PH :9745998592.

KANHANGAD

732. KVR CARS (3L01-K2-02), ARANGADI, P.O. KANHANGAD, DIST. KASARGOD, - 671315
PH :9605040999.
733. POPULAR VEHICLES & SERVICES LTD. (4702-K2-06), HIGHWAY JUNCTION,KANHANGAD SOUTH P.O .,KANHANGAD - 689641
PH :468-9846400300.
734. INDUS MOTOR CO. PVT. LTD. (4701-K2-0F), SURVEY NO.491/3A1 AND 491/3A2, AJANUR VILLAGE, KANHANGAD, HOSADURGA TALUK, KASARAGOD DISTT, KERALA. - 671541
PH :9745998024.

KANJIRAPALLY

735. INDUS MOTOR CO. PVT. LTD. (7E01-9Y-02), VADAKUMBHAGAM KARAYIL, KUNNAMBHAGAM P.O. , KANJIRAPALLY - 686506
PH :9745998009.

KANNUR

736. HAR CARS (K101-K1-01), HAR AVENUE, KANNOTHUMCHAL, CHOVVA POST, KANNUR - 670006
PH :0497-9539009392.
737. HAR CARS (K101-K1-03), POTTIAN SHEKHARAN ROAD, MAKKANY , SOUTH BAZAR, KANNUR - 670002
PH :9539009405.
738. INDUS MOTORS CO (P) LTD (4701-K1-0E), BALANKINAR JN., KATTAMPALLY.P.O, KANNUR - 690011
PH :0497 -9745998023.
739. KVR CARS (3L01-K1-04), CP-3-651-B, OPP. DHANRAJ TALKIES, PUTHIYATHERU, CHIRAKKAL POST, KANNUR, KERALA - 670011
PH :0497-7558028889.
740. POPULAR VEHICLES & SERVICES LTD. (4702-K1-0F), PLOT NO.82/6A, NEAR CHARAPPURAM SREEMUTHAPPAN KAVU, KAPPAD ROAD, THAZHE CHOVVA (PO), KANNUR - 670018
PH :0497-9846400300.

KARIKKAD

741. BRD CAR WORLD LTD. (A404-GE-02), BRD INDUSTRIAL ESTATE,KARIKKAD, KUNNAMKULAM - 680519
PH :9995804599.

KARUNAGAPALLY

742. SARATHY AUTO CARS (C701-AQ-05), K.S. PURAM,NEELIKULAM, KARUNAGAPPALLY,KOLLAM, - 690544
PH :9947277765.

KASARGOD

743. KVR CARS (3L01-3L-01), ANANGUR, VIDYANAGAR (PO), NH17, KASARGOD - 671123
PH :04994-9747011100.
744. POPULAR VEHICLES & SERVICES LTD. (4702-3L-0D), MUNDAKULAM, CHEMMANAD (PO), KASARGOD - 671371
PH :4994-8086078864.
745. INDUS MOTORS CO. PVT. LTD. (RO02-3L-03), SURVEY NO.384/3C 10, MUTTATHODY VILLAGE, INDIRA NAGAR, KASARAGOD - 671541
PH :9747550747.

KATTAPANA

746. INDUS MOTOR (ZN01-ZN-01), KATTAPPANA-IDUKKI KAVALA, BYE PASS ROAD, KATTAPPANA, IDUKKI (DIST.). - 685508
PH :04868-9746743460.

KAYAMKULAM

747. HERCULES AUTOMOBILES INTERNATIONAL (P) LTD (E501-8L-04), NH-47, KOTTUKULANGARA JUNCTION, KAYAMKULAM, ALLAPPUZHA DIST,KERALA - 690502
PH :0479-9947040824.
748. INDUS MOTOR CO. PVT. LTD. (2702-8L-05), KARIYILAKULANGARA, KAYANKULAM P.O., ALAPPUZHA DISTT. - 690572
PH :0479-9745998005.
749. POPULAR VEHICLES & SERVICES LTD. (B802-8L-03), NH 47, KOTTUKULANGARA, KAYAMKULAM P.O., ALAPPUZHA DISTT. - 690502
PH :0479-9946105601.

KILLIPPALAM

750. POPULAR VEHICLES & SERVICES LTD. (1601-16-05), OPP. ST. JUDE CHURCH,CIT ROAD, KILLIPPALAM,TRIVANDRUM - 695002
PH :8589992434.

KODANGALLUR

751. SAI SERVICE PVT. LTD. (2705-8K-03), NH-17,T.K.S.PURAM,,KODUNGALLOOR - 680667
PH :0480-8606980006.

KODUVALLY

752. A M MOTORS (BGX1-BGX-01), SURVEY NO:91/9, 91/10,NALLANKADY, VAVAD POST, KODUVALLY, KOZHIKODE DISTRICT, KERALA - 673572
PH :9895979023.

KOLLAM

753. INDUS MOTOR CO. PVT. LTD. (1602-Q4-03), OLD SARATHY THEATRE, PUNALOOR ROAD, KOLLAM - 691005
PH :0474-9745998004.
754. POPULAR VEHICLES & SERVICES LTD. (1601-Q4-04), H & C COMPOUND, MUNDDACKAL, KOLLAM - 680006
PH :0474-98464 98656.

KOLLAM (QUILON)

755. SARATHY AUTO CARS (C701-C7-01), NH-47 BYE PASS,AYATHIL(P.O.),QUILON - 691017
PH :0474-9847072065.
756. SARATHY AUTO CARS (C701-C7-08), SURVEY NO. (SIDCO) 318/1, SHED NO. B12, UMAYANALLUR SIDCO INDUSTRIAL ESTATE, KOLLAM. - 691589
PH :0474-9847072065, 2537280.

KONDOTTY

757. INDUS MOTORS CO. PVT. LTD. (ID02-ID-01), SURVEY NO. 16/1, BLOCK NO. 36 (OLD SURVEY NO. 100/1), NEDIYIRUPPU VILLAGE, KONDOTTY PO, ERNAD TALUKA, MALAPURAM DISTRICT, KERALA - 683573
PH :9745997875.

KOOTHATTUKULAM

758. SAI SERVICE PVT. LTD. (VM01-VM-01), EDAPUTHUSSERY BUILDING, M.C. ROAD, OPP. MARYGIRI PUBLIC SCHOOL, KOOTHATHUKULAM P.O., ERNAKULAM DT. - 686662
PH :0485-9645106258.

KOTHAMANGALAM

759. INDUS MOTOR CO. PVT. LTD. (7E01-9V-03), PALAKKADAN BUILDING,CHANKLAM,KOTHAMANGALAM - 686691
PH :9745998479.
760. POPULAR VEHICLES & SERVICES LTD. (2701-9V-0B), NEAR BSNL OFFICE, THANGALAM, KOTOHAMANGALAM, KERALA - 686691
PH :9946104661.

KOTTAKKAL

761. INDUS MOTOR CO. PVT. LTD. (4701-8M-09), NEAR MATHRUBHUMI PRESS, P.O. KOTTAKKAL, MALAPPURAM DIST, - 676503
PH :0493-9745998017.
762. POPULAR VEHICLES & SERVICES LTD. (4702-8M-03), NH-17, ,CHANDAPARAMBU, ,RANBATHANI P.O, MALAPPURAM, KOTTAKAL - 676510
PH :0483-9946104631.

KOTTARAKARA

763. CHITHIRA AUTOMOBILES (C781-S8-01), RAILWAY STATION JUNCTION ,KOTTARAKARA
PH :0474-9447711001.

KOTTARAKKARA

764. POPULAR VEHICLES & SERVICES LTD. (S801-S8-01), MYLOM, MC ROAD, KOTTARAKKARA, DISTT-KOLLAM, KERELA - 691531
PH :8086073466.
765. SARATHY AUTO CARS (S802-S8-01), WARD NO.40, MELILLIA PANCHAYATH, IPPALLOOR LOWER KARIKAM, KOTTARKARA DISTT. KOLLAM (KERALA) - 691531
PH :9947073065.

KOTTAYAM

766. AVG MOTORS LTD. (B801-B8-01), ERAYILKADAVU, KOTTAYAM - 686001
PH :0481-9446323999.
767. INDUS MOTOR CO. PVT. LTD. (2702-B8-04), MULANKUZHA JN., NATTAKOM P.O., KOTTAYAM , KERALA - 686013
PH :0481-9745998007.
768. INDUS MOTOR CO. PVT. LTD. (2702-B8-0C), MANIPPUZHA, NATTAKOM P.O.,KOTTAYAM - 686013
PH :9745998007.
769. POPULAR VEHICLES & SERVICES LTD. (B802-B8-01), NEAR ST. THOMAS CHURCH, S.H. MOUNT, P.O, KOTTAYAM - 686006
PH :0481-9539007400.

KOZHENCHERRY

770. AVG MOTORS LTD. (W801-AS-03), KOZHENCHERRY, COLLEGE JUNCTION, DISTRICT- PATHANAMTHITTA, - 689641
PH :9446492988.

KUNNAMKULAM

771. POPULAR VEHICLES & SERVICES LTD. (2701-8N-07), CHOONDAL,TRISSUR ROAD, KUNNAMKULAM, TRISSUR DIST - 680502
PH :0488-9846397066.

LAKKIDI PERUR

772. A M MOTORS LTD. (CER1-CER-01), 217/7, 217/2, 278/2, 278/1, PALAPPURAM, P.O. OTTAPPALAM, LEKKIDI PERUR DISTT. PALAKKAD, - 679302
PH :8086305555.

MALAPURAM

773. A.M. MOTORS (E601-E6-01), VARANGODE, DOWNHILL, MALAPURAM, - 676519
PH :493-9895705325.

MALLAPALLY

774. INDUS MOTORS (I201-I2-01), THOPPIL COMPLEX, MALLAPPALLY KOTTAYAM RD, MALLAPPALLY WEST, MALLAPPALLY (KERALA) - 689585
PH :9747541400.

MANJERI

775. A.M. MOTORS (E601-8V-05), THURAKKAL BYEPASS, MANJERI, MALAPURAM, KERALA - 676121
PH :9895756035.
776. K V R AUTO CARS PVT. LTD, (8V02-8V-01), CH BYE PASS ROAD, MANJERI, MALAPPURAM, KERALA - 676123
PH :9947020741.
777. POPULAR VEHICLES & SERVICES LTD. (4702-8V-0E), NARUKARA VILLAGE, RAJIV GANDHI BYEPASS JN., THRUKKAL, MANJERI (KERALA) - 676121
PH :0483-8589992405.

MANNARKAD

778. A.M. MOTORS (E601-RA-07), NH-213, MANNARKAD, DIST.-PALAKKAD - 678582
PH :9895979048.
779. INDUS MOTORS (2702-RA-0K), ANAKATTY ROAD, AANDIPPADAM, NELLIPPUZHA-PO. MANNARKAD,KERALA - 678583
PH :9745995946.

MAVELIKARA

780. POPULAR VEHICLES & SERVICES LTD. (B802-S9-02), KONNAYIL SUVAKO INDUSTRIAL COMPLEX,,SHED A-1,, KOLLAKADAVU INDUSTRIAL ESTATE, KOCHAL MOODU, KALLIMEL P.O.,, MAVELIKKARA, KERALA - 690570
PH :9846298622.
781. INDUS MOTORS (1602-S9-07), NEAR PRATHIBA THEATRE, PUTTHIYAKAVU, MAVELIKKARA - 690101
PH :9745998137.
782. HERCULES AUTOMOBILES INTERNATIONAL (P) LTD (S901-S9-01), SURVEY NO. 227/3, SHANTHIVANAM JUNCTION, CHERUKOLE P.O., MAVELIKKARA, KERALA - 690104
PH :9747022424.

MUVATTUPUZHA

783. INDUS MOTOR CO. PVT. LTD. (7E01-7E-01), NH-49, MUVATUPUZHA KODAMANGALAM ROAD, NEAR R.K. HOSPITAL, MUVATUPUZHA, ERNAKULAM DIST - 686661
PH :0485-9745998011.
784. POPULAR VEHICLES & SERVICES LTD. (2708-7E-02), MUTHUKALLU JUNCTION,PERUMPALLUR P.O., MUVATTUPUZHA, KERALA - 686673
PH :9846374786.
785. INDUS MOTOR CO. PVT. LTD. (7E01-7E-08), BUILDING NO. 11/146(A), KADATHY MARKET, NH-49, MUVATTUPUZHA, DISTRICT - ERNAKULAM. - 686673

NEYYANTTINKARA

786. HERCULES AUTOMOBILES INTERNATIONAL (P) LTD (1603-AT-02), NH 47, KOTTAMAN , KOLLAYIL PANCHAYAT, NEYYATTINKARA, TRIVANDRUM, - 695503
PH :9995867628.

NEYYATINKARA

787. INDUS MOTORS (AT01-AT-01), INDUS MOTOR CO. PVT. LTD., OLD M.V THEATRE, NEAR KSRTC BUS STATION, NEYYATINKARA, DIST. TRIVANDRUM - 695121
PH :0471-9747544500.

NILAMBUR

788. INDUS MOTOR CO. PVT. LTD. (4701-AF-0A), MINERVA JUNCTION, NILAMBUR , KERALA - 679329
PH :04931-9745998396.
789. INDUS MOTOR CO. PVT. LTD. (4701-AF-0D), MANAVEDHAM HIGH SCHOOL ROAD, CHANDAKUNNU - NILAMBUR PO, NILAMBUR, MALAPURAM DIST. - 679329
PH :9745998414.

NILAMEL

790. HERCULES AUTOMOBILES INTERNATIONAL (P) LTD (1603-DA-03), M. C. ROAD, KANNANCODU, NILAMEL, KOLLAM (DIST.) - 691535
PH :8086079107.

OTTAPALAM

791. INDUS MOTOR CO. PVT. LTD. (PA01-PA-01), BUILDING NO.23/667, 23/669, PALAKKAD-OTTAPPALM ROAD, OTTAPPALAM VILLAGE, OTTAPPALAM TALUKA, PALAKKAD DISTT., KERALA. - 679101
PH :0466-9745998014.

PALA

792. POPULAR VEHICLES & SERVICES LTD. (B802-GN-04), 12TH MILE,PALA-PONKUNNAM ROAD,PALA - 686575
PH :0482-8086073454.

793. INDUS MOTOR CO. PVT. LTD. (7E01-GN-05), OPP. ALPHONSA COLLAGE ARUNAPURAM(PO), PALA, KOTTAYAM - 686574
PH :9745998878.
794. AVG MOTORS LTD. (GN03-GN-01), SURVEY NO.670/1, BLOCK-21, LALAM VILLAGE, ANTHINADU MEENANCHIL, PALA, KOTTAYAM DIST. - 686651
PH :4822-9447137246.
795. INDUS MOTORS CO. PVT. LTD. (7E01-GN-07), SURVEY NO. 176, BLOCK NO. 16, HIGHWAY JUNCTION, ETTUMANOOR-POOJAR HIGHWAY, CHERPUNKAL, PALA, KOTTAYAM DISTRICT - 686584
PH :9747516934.

PALAKKAD

796. INDUS MOTOR CO. PVT. LTD. (2702-Y2-0G), VADAKKUMURI-NH-47, KANNADI, KUZHALMAMMAM (P.O.), PALAKKAD. - 678701
PH :9745998590.
797. POPULAR VEHICLES & SERVICES LTD. (2701-Y2-09), OPP. PALANA HOSPITAL,KODUVAYOOR ROAD,KINASSERY P.O.,PALAKKAD - 678707
PH :0491-9846300650.
798. INDUS MOTOR CO. PVT. LTD. (Y202-Y2-01), DOOR NO: 5/366 & 367, NH 47, KOOTUPATHA, CHANDRANAGAR POST, PALAKKAD - 678007
PH :9747519500.

PARAVOOR

799. BRD CAR WORLD LTD. (A404-ZS-08), MAVINCHUVADU, MANNAM P.O., NORTH PARAVUR, PARAVOOR (KERALA) - 683520
PH :9567869239.

PATHANAMTHITTA

800. AVG MOTORS LTD. (W801-W8-02), JUNNUGAPADY, MYLAPRA ROAD, PATHANAMTHITTA, - 689671
PH :0468-9744077183.
801. AVG MOTORS LTD. (W801-W8-04), SURVEY NO. 53/7A/3, WARD NO. 13, KUMBAZHA, PATHANAMTHITTA.

PATHNAMTHITTA

802. AGT MOTORS (W881-W8-01), AGT TOWERS, PUTHENPEEDI, OMALLUR, PATHANAMTHITTA
PH :0468-9288117477.
803. INDUS MOTOR CO. PVT. LTD. (1602-16-04), KUMBAZHA, PATHANAMTHITTA - 689653
PH :0468-9745998008.
804. POPULAR VEHICLES & SERVICES LTD. (B802-W8-05), T.K. ROAD, NEAR COLLECTORATE,PATHANAMTHITTA - 689645
PH :9946105687.

PATTAMBI

805. A.M. MOTORS (E601-8P-04), SHORANUR ROAD, PATTAMBI, DISTRICT-PALAKKAD, - 679306
PH :0466-9567866059.
806. INDUS MOTOR CO. PVT. LTD. (2702-8P-0B), PERINTHALMANNA ROAD, THEKKUMURI, PATTAMBI - 679303
PH :9745998295.
807. A.M. MOTORS (E601-8P-09), CHERPULASSERY ROAD, KOOMBAN KALLU, KARIMPULLI, MELE PATTAMBI POST, PALAKKAD DISTT., KERALA. - 679306
PH :0466-9567866059.

PAYANNUR

808. POPULAR VEHICLES & SERVICES LTD. (4702-9Z-04), N H 17,,EZHILODE P O, ,,PAYYANUR - 670309
PH :0497-9846036510.

PERINTHALMANNA

809. A.M. MOTORS (E601-7H-03), NEAR FIRE STATION, HOSPITAL ROAD, PERINTHALMANNA - 679322
PH :04933-8129818235.
810. KVR AUTOCARS PVT. LTD. (7H01-7H-01), SURVEY NO. 87/8-15, CALICUT ROAD, NEAR ITC, THIRURKAD, PERINTHALMANNA - 679351
PH :04933-9747020573.
811. KVR AUTOCARS PVT. LTD. (7H01-7H-06), OOTY ROAD, PERINTHALMANNA, MALAPPURAM(DT.), KERALA - 679322
PH :04933-9747020837.

PERUMBAVOOR

812. SAI SERVICE PVT. LTD. (2705-8W-04), M.C.ROAD,PERUMBAVOOR,ERNAKULAM DIST,KERALA - 683542
PH :9645106543.

POINACHI

813. KVR CARS (3L01-GF-03), CHOWKI, MAILLATTY(P.O.), (VIA) UDUMA, POINACHI, KERALA - 671319
PH :9526021822.

PUNALUR

814. SARATHY AUTO CARS (C701-8Q-03), NH-208, Q.S. ROAD,ELAMPAL POST,PUNALUR, KOLLAM DIST - 691322
PH :0475-9847073065.

QUILANDY

815. INDUS MOTOR CO. PVT. LTD. (3O01-3O-01), BUILDING NO.13/53 A, CHENGOTTUKKAVE VILLAGE, QUILANDY, KOZHIKODE DISTT. - 673306
PH :9745997875.

RAMANATTUKARA

816. A.M. MOTORS (E601-KB-06), NEAR RED CRESCENT HOSPITAL, FEROKE, CHUNGAM, CALICUT DISTRICT, RAMANATTUKARA, - 673632
PH :9567866144.

RANNI

817. INDUS MOTOR CO. PVT. LTD. (7E01-JX-06), CHELLAKKAD-PO, PATHANAMTHITTA(DISTRICT), RANNI - 689677
PH :9745998737.

SASTHAMKOTTAH

818. INDUS MOTORS CO. PVT. LTD. (1602-RT-09), NO. SP IX/661, 662, 663, KADAPUZHA ROAD, PORUVAZHY P.O., BHARANIKUVU, SASTHAMKOTTAH, KOLLAM – , KERALA - 690520
PH :9745998849.

SHORNUR

819. POPULAR VEHICLES & SERVICES LTD. (2701-1I-0E), PALAKKAD PATTAMBI ROAD, KULAPPULLY JUNCTION, VADANAMKURUSSI, SHORNUR - 679124
PH :8589992425.

TALIPARAMBA

820. HAR CARS (K101-9W-02), SREEKANDAPURAM MAIN ROAD, KANNUR (DIST), KERALA, THALIPARAMBA - 670141
PH :0460-9539009480.

TELLICHERRY

821. INDUS MOTOR CO. PVT. LTD. (4701-Y3-04), TEMPLE GATE, MAKKOOTAM, THALAYI, TELLICHERRY , KERALA - 670102
PH :9747520100.

THALASSERY

822. INDUS MOTOR CO. PVT. LTD. (RO02-RO-01), NETTUR POST, KODUVALLY, THALASSERY, KANNUR DISTRICT - 670105
PH :490-9745998022.

THIRUVALLA

823. AVG MOTORS LTD. (Y501-Y5-01), M.C ROAD, PERUMTHURUTHI, THIRUVALLA , PATHANAMTHITTA DISTT - 689107
PH :0469-8606071155.
824. POPULAR VEHICLES & SERVICE (B802-Y5-06), KAVUMBHAGOM P.O, THIRUVALLA, PATHANAMTHITTA (DIST.), KERALA - 689103
PH :8086073489.

THIRUVANANTHAPURAM

825. SOUTH PARK MOTORS PVT. LTD. (1604-16-01), SURVEY NO. 985/3-4-5-6, VILLAGE - KADAKAMPALLY, CHACKAI BYPASS, TALUKA - TRIVANDRUM, TRIVANDRUM, KERALA. - 695029
PH :9526100008.
826. SOUTH PARK MOTORS PVT. LTD. (1605-16-01), RE SURVEY NO. 9/3, TO 9/5, 9/8, TO 9/10, 9/15, 9/18, 9/19, 6/12, 9/23, KAZHKOOTAM, VAZHAYILA, VILLAGE – PEROORKADA, TRIVANDRUM. - 695005
PH :471-3050000, 9544040005.
827. SARATHY AUTO CARS LTD. (C701-16-09), 77/2-11, NEMOM VILLAGE, PAPPANAMCODU INDUSTRIAL AREA, TALUKA AND DISTRICT-THIRUVANANTHPURAM, KERALA.

THODUPUZHA

828. INDUS MOTOR CO. PVT. LTD. (7E01-HZ-04), PALA ROAD, THODUPUZHA - 685584
PH :9745998631.

THRISSUR

829. BRD CAR WORLD LTD. (A404-A4-01), NH 47,BYE PASS,KONIKARRA POST,THALORE, THRISSUR - 680031
PH :0487-9995807141.
830. INDUS MOTOR CO. PVT. LTD. (2702-A4-08), KUNAMKULLAM CHAVAKKAD ROAD, OPPOSITE CHOOLPURAM MOSQUE, GURUYOOR, THRISSUR - 680505
PH :0487-9745998015.
831. INDUS MOTOR CO. PVT. LTD. (2702-A4-0D), JYOTHI COMPLEX, GURUVAYOOR ROAD, WEST FORT, THRISSUR - 680004
PH :0487-9745998014.
832. POPULAR VEHICLES & SERVICES LTD. (2701-A4-05), KUNNATHUMKARA, PARAVATTANI, THRISSUR, KERALA - 680655
PH :0487-8589992404.
833. SAI SERVICE PVT. LTD. (2705-A4-06), 17/30,POOTHOLE,THRISSUR,KERALA - 680004
PH :9645106089.
834. BRD CAR WORLD LTD. (A404-A4-07), GURUVAYOOR ROAD, PUNKUNNAM P.O., PUZHAKKAL, THRISSUR - 680002
PH :0487-9746476529.

THRITHALLUR

835. BRD CAR WORLD LTD. (A404-SS-04), PO-THRITHALLUR, NH-17, THRITHALLUR THRISSUR - 680619
PH :9539197888.

TIRUR

836. A.M. MOTORS (E601-Y4-02), SATELLITE AUTO WORKS, PAYYANAGADI POST, TIRUR - 676101
PH :0494-9895940000.
837. KVR AUTOCARS PVT. LTD. (7H01-Y4-05), T.P 7/204-B, TANUR ROAD,MOOCHIKKAL, MEENADATHUR P.O., TIRUR, DISTRICT-MALAPPURAM, KERALA - 676307
PH :9747020673.

838. A.M. MOTORS (E601-Y4-08), THALAKKADATHOOR PO, MALAPPURAM,MALAPPURAM DISTT. - 676103
PH :0494 -9895705323.

TRIPRAYAR

839. POPULAR VEHICLES & SERVICES LTD. (2701-8R-08), NEAR CENTURY PLAZA, NATTIKA P.O, TRIPRAYAR, TRISSUR DIST - 680566
PH :0487-9846699245.

TRIPUNTARA

840. SAI SERVICE PVT. LTD. (2705-AK-05), HILL PALACE ROAD,KARINGACHIRA,COCHIN - 682301
PH :9645105067.

TRIVANDRUM

841. HERCULES AUTOMOBILES INTERNATIONAL (P) LTD (1603-16-01), VAZHAYILA P.O., TRIVANDRUM - 695564
PH :9995867654.
842. INDUS MOTOR CO. PVT. LTD. (1602-16-02), NH BYE PASS ROAD, VEMPALAVATTOM, TRIVANDRUM - 695029
PH :0471-9745998003.
843. INDUS MOTOR CO. PVT. LTD. (1602-16-01), T.C. 24/885 THYCAUD P.O., THYCAUD P.O., METTUKUDA, TRIVANDRUM - 695014
PH :0471-9745998001.
844. POPULAR VEHICLES & SERVICES LTD. (1601-16-01), C.I.T. ROAD, KILLIPALAM, KARAMANA P.O, TRIVANDRUM - 695002
PH :0471-9846498633.
845. SARATHY AUTO CARS (C701-16-04), KOVALAM BYEPASS,SN NAGAR, MANACAUD (PO), TRIVANDRUM - 695009
PH :0491-9847401465.
846. INDUS MOTOR CO. PVT. LTD. (1602-16-08), NEAR MUSLIM JUMA MASJID, MUKKAM PLAMOODE, VATTAPPARA-MANNANTHALA M C ROAD, VATTAPPARA PO, MANNANTHALA,TRIVANDRUM - 695028
PH :9747540100.
847. INDUS MOTORS CO. PVT. LTD. (1602-16-11), SURVEY NO.3, TC-7/1069(9), MARUTHAMKUZHI, SASTHAMANGALAM VILLAGE, PTP NAGAR ROAD, KANJIRAMPARA P.O., TRIVANDRUM - 695030
PH :9746743357.
848. INDUS MOTOR CO. PVT. LTD. (1602-16-05), G.G. MEDICAL COLLAGE P.O., MURINJAPALAM, TRIVANDRUM, MURINJAPALAM, , - 695011
PH :9745998002.

UPPALA

849. POPULAR VEHICLES & SERVICES LTD. (4702-4I-0A), N.H.17, KAIKAMPA, UPPALA P.O., KASARGOD (KERALA) - 671322
PH :8589051616.
850. KVR CARS (4I02-4I-01), NH 17, BANDIYODE, MANGALAPADI (PO), UPPALA, KASARGOD DISTT.,KERALA - 671324
PH :4994-9747021211.

URAKAM

851. INDUS MOTORS (AAH1-AAH-01), IRINJALAKKUDA ROAD, POOCHUNNIPPADAM, URAKAM PO, TRICHUR DISTT., KERALA - 680562
PH :9745998044.

VADAKARA

852. INDUS MOTOR CO. PVT. LTD. (4701-8S-07), BYE PASS JN,VATAKARA-673104,CALICUT, - 673104
PH :0496-9745998021.
853. POPULAR VEHICLES & SERVICES (8S02-8S-01), NEAR MADAPPALLY GOVT. COLLEGE, MADAPPALLY, P.O. VADAKARA, KOZHIKODE (KERALA) - 673102
PH :0496-8943345935.

VAIKOM

854. INDUS MOTOR CO. PVT. LTD. (2702-WN-0J), THODUPUZHA ROAD, THALAYOLAPARAMBU, VAIKOM(TALUK), DISTRICT-KOTTAYAM, KERALA - 686605
PH :9746743003.

VETTICHIRA

855. KVR AUTOCARS PVT. LTD. (7H01-MZ-03), AP IV, 75A TO G, NH-17, CHUNKAM, DIST. MALAPPURAM, VETTICHIRA, - 676552
PH :9747020023.

WADAKKANCHERY

856. BRD CAR WORLD LTD. (A404-MX-03), VAZHAKODE, CHELAKARA ROAD, MULLURKARA P.O., WADAKKANCHERY, THRISSUR DIST - 680583
PH :9567869403.

MADHYA PRADESH

ASHOK NAGAR

857. PREM MOTORS PVT. LTD. (DS01-DS-02), SURVEY NO. 67/2/3, SINGAKHEDI HOUSE GUNA BYPASS NEAR RAJ MATA CIRCLE, ASHOKNAGAR, MADHYA PRADESH. - 473331
PH :9926809110.

ASHTA

858. JEEWAN MOTORS PVT. LTD. (BSF1-BSF-01), KHASRA NO.111/1 NEAR RELIANCE PETROL PUMP, BHOPAL ROAD, ASHTA, DISTT. SEHORE (M.P.) - 466001
PH :0756-9826429604.

BADNAWAR

859. PATEL MOTORS PVT. LTD. (BPT1-BPT-01), KHASRA NO. 2194/1, BADNAGAR ROAD, BADI CHOUPATI, OPPOSITE BSNL TOWER, BADNAWAR, DISTT. - DHAR, MADHYA PRADESH. - 454660
PH :07295-232228, 9977703512.

BADWAH

860. NIMAR MOTORS (AU01-UJ-05), NIRMAL COMPLEX , INDORE ROAD , BARWAH - 451001
PH :07280-224567, 7770878726.

BALAGHAT

861. KUNAL MOTORS (U501-TP-04), KH NO.-1/56, JHULELAL DHARMSHALA ROAD, BALAGHAT, MADHYA PRADESH - 4811001
PH :07632-240088.

BARELI

862. MY CAR (BHOPAL) PVT LTD. (I302-I3-01), KHASRA NO.423/2, NH-12, J.J. ROAD, NEAR SHRIVASTAV MARRIAGE GARDEN, BARELI DISTRICT RAISEN (M.P.) - 464668
PH :07486-230103.

BARNAGAR

863. RUKMANI MOTORS (P) LTD (BBK1-BBK-01), RUNIJA ROAD ,BARNAGAR CITY, DISTRICT UJJAIN - 456771
PH :9755512100.

BARWANI

864. NIMAR MOTORS (AU01-SA-02), NEAR ICE FACTORY,RAJGHAT ROAD, BARWANI - 451551
PH :07290-224366.

BETMA

865. OCEAN MOTORS (BVR1-BVR-01), OPPOSITE MPEB OFFICE, INDORE-AHEMDABAD ROAD, BETMA, DISTRICT – INDORE, MADHYA PRADESH . - 453001
PH :7389936444.

BETUL

866. KUNAL MOTORS (U501-U5-02), BHOPAL - NAGPUR NATIONAL HIGHWAY, NEAR BADORA CHOWK,, BETUL - 460001
PH :07141-239991 / 239992.

BHOPAL

867. JEEWAN MOTORS (0302-03-01), 9E SECTOR A,INDUSTRIAL AREA, GOVINDPURA, BHOPAL - 462024
PH :0755-4058888.
868. MY CAR (BHOPAL) LTD (0303-03-01), 189,JINSI,NH-12,BHOPAL (MP) - 462008
PH :0755-4022800 / 4222999.
869. MY CAR (BHOPAL) LTD (0303-03-03), 196, MANDAKINI HOUSING SOCIETY,,KOLAR ROAD,,BHOPAL,MADHYA PRADESH - 462042
PH :0755-4082854.
870. SATYAM MOTORS (0307-03-01), NH-12,SUVEESHA NAGAR,HOSHANGABAD ROAD,MISROAD - 462040
PH :0755-4422000 / 4422056.
871. RAJRUP MOTOR JUNCTION (A UNIT OF RMJ MOTORS PVT. LTD.) (0308-03-01), 8A, SECTOR-C, J.K. ROAD, GOVINDPURA INDUSTRIAL AREA, BHOPAL, MADHYA PRADESH - 462023
PH :755-4063529,30,31,32,33,34,35.
872. JEEWAN MOTORS (0302-03-03), PLOT NO. 157, NEAR PUNJAB & SINDH BANK M.P. NAGAR ZONE-II, BHOPAL - 462023
PH :0755-9826429605, 2558831.
873. JEEWAN MOTORS PVT. LTD. (0302-03-04), KHASRA NO. 54-55/1/1, NEAR RELIANCE FRESH,CHUNA BHATTI MAIN ROAD, INDIAN OIL PETROL PUMP, BHOPAL (M.P.) - 462036
PH :0755-4057988.

BIAORA

874. PRIME CARS (3Q01-0F-03), NR. INDORE-BHOPAL SQUARE, A B ROAD, BIAORA - 465674
PH :7374-230063.

BINA

875. ADINATH MOTORS (BHQ1-BHQ-01), PLOT NO. 2/3/4/5 AMANTIGEL LAND SEMI URBAN INDUSTRIAL AREA, BINA, KHURAI ROAD (NH 26) BINA, DISTRICT – SAGAR, MADHYA PRADESH - 470113
PH :9009780030.

BURHANPUR

876. NIMAR MOTORS PVT. LTD. (BRR1-BRR-01), KHASRA NO. 654/15-16, BASEMENT OF HOTEL AMBIKA RESIDENCY, OPP. PAKIZA SHOWROOM, SANJAY NAGAR, AMRAVATI ROAD, BURHANPUR, MADHYA PRADESH - 450331
PH :07325-242211.

CHATTARPUR

877. ADINATH MOTORS (G101-8B-02), MAHOBA ROAD, NEAR BUS STAND, CHHATARPUR, DISTT SAGAR - 471001
PH :07682-241446.

CHHINDWARA

878. KUNAL MOTORS (U501-U5-03), OPP. KUNAL MOTORS SHOWROOM, ,LAL BAGH TIRAHA,BEHIND TRUE VALUE OUTLET, NASIRABAD ROAD, CHHINDWARA(MP), - 480001
PH :07162-236436.

879. KUNAL MOTORS (U501-U5-06), PLOT NO. 546, LAHGARUA NEAR MULLU BABA MANDIR, NARSINGHPUR ROAD, CHINDWARA, MADHYA PRADESH - 480002
PH :8349999112.

DAMOH

880. ADINATH MOTORS (G101-RD-03), KILLARI NAKA, SAGAR ROAD, DAMOH - 470661
PH :07812-221740.

DATIA

881. PREM MOTORS PVT. LTD. (3003-WE-05), NR.BHOJPURIA MOTORS, BHANDER ROAD, DATIA, MADHYA PRADESH - 475661
PH :07522-233236.

DEPALPUR

882. OCEAN MOTORS (WB01-WB-03), NEAR LEELA RESIDENCY,INDORE ROAD,DEPALPUR,DIST.INDORE-MP - 453115
PH :07322-220505, 222501.

DEWAS

883. PRIME CARS PVT. LTD. (3Q01-3Q-01), RASULPUR BYPASS TIRAHA, AB ROAD, DEWAS - 455001
PH :07272-259301.

DHAR

884. RUKMANI MOTORS (P) LTD (5304-LM-02), 41/2 MAGAJPURA,DHAR,, - 454001
PH :7292-223500.

DINDORI

885. STANDARD AUTO AGENCIES (AVA1-AVA-01), SUKKHAR WARD 1, NEAR DHURVE PETROL PUMP,DINDORI - 481661
PH :07644-280030,'7771014728.

GANJBASODA

886. MY CAR (BHOPAL) LTD. (AEA1-AEA-01), NEAR GHUNGRU GARDEN , TYONDA ROAD , GANJBASODA, VIDISHA DISTT., M.P. - 464221
PH :7389928892.

GUNA

887. PREM MOTORS PVT. LTD. (S301-S3-01), OPP R.T.O.,A.B. ROAD,GUNA, - 473001
PH :07542-268015 / 268081.

GWALIOR

888. PREM MOTORS PVT. LTD. (3003-30-01), M. L. B. ROAD,GWALIOR,, - 474002
PH :0751-4010757.

889. PREM MOTORS (3005-30-01), SHIVPURI LINK ROAD, GWALIOR - 474002
PH :0751-4055137.

HARDA

890. INFINITY CARS (KM01-VY-02), NEAR RTO,INDORE HIGHWAY ROAD,HARDA MP - 461331
PH :8889284444.

HOSHANGABAD

891. INFINITY CARS (KM01-KM-01), 185, RAMJIBABA GROUND, HOSHANGABAD, MADHYA PRADESH - 461001
PH :07574-256677.

INDORE

892. MY CAR PVT. LTD. (5305-53-01), 78/1/3, HUKMAKHEDI RAU, ADJESCENT IPS ACADEMY, A6 ROAD,INDORE - 452031
PH :0731-4272727.

893. PATEL MOTORS (INDORE) PVT LTD. (5303-53-02), 176/1,PIPLYA RAU,A.B. ROAD ,INDORE - 452017
PH :0731-4245222.

894. PATEL MOTORS (INDORE) PVT LTD. (5303-53-01), 428/3/3,NIRANJANPUR,A B ROAD,INDORE - 452010
PH :0731-4033333.

895. RUKMANI MOTORS (P) LTD (5304-53-01), 2-3,,A.B. ROAD,INDORE - 452001
PH :0731-4075401.

896. RUKMANI MOTORS (P) LTD (5304-53-03), NO. -4/5, MANORAMA GANJ, INDORE - 452001
PH :0731-4075408.

897. OCEAN MOTORS PVT. LTD. (5306-53-01), PLOT NO.49, SCHEME NO.97, PART 4, COMMERCIAL MANDI, CAIT SQUARE, RING ROAD, INDORE, MP. - 452001
PH :0731-6627500, 6627505.

898. OCEAN MOTORS (5306-53-02), NEAR QUEENS COLLEGE,ASHARAM BAPU ASHRAM, KHANDWA ROAD,INDORE - 452017
PH :0731-6617505,2877505.

899. MY CAR (INDORE) PVT. LTD. (5305-53-02), KHASARA NO.15/1/8 GRAM PIPLIYA KUMAR GODOWN NO.1112, DEWAS NAKA, INDORE. - 452010
PH :0731-4737373.

900. PATEL MOTORS (5303-53-03), M.O.G. LINES, NEAR GANGWAL BUS STAND, DHAR ROAD, INDORE (M.P.) - 452006
PH :0731-2383099,2382099.

901. OCEAN MOTORS PVT. LTD. (5306-53-03), SCHEME NO.94, SECTOR A, PLOT NO. 28FA, RING ROAD, NEAR PIPLIYAHANA CIRCLE, INDORE (M.P.) - 452001
PH :9685333331, 7389936451.

902. KATHED MOTOCORP (5307-53-01), PLOT NO. 483/2/2, MAIN DHAR ROAD, NEAR CHANDAN NAGAR POLICE STATION, INDORE, MADHYA PRADESH. - 452002
PH :7471111132.

JABALPUR

903. SHUBH MOTORS (5403-54-01), MAHANADDA, MADAN MAHAL ROAD, JABALPUR, MADHYAPRADESH - 486001
PH :0761-4099999.

904. STANDARD AUTO AGENCY (5402-54-01), OPPOSITE ALLAHABAD BANK,DELITE TALKIES ROAD,CIVIL LINES, JABALPUR - 482001
PH :0761-4040405 / 4040406.

905. STANDARD AUTO AGENCY (5402-54-03), DEENDAYAL CHECK, DAMOH NAKA, JABALPUR - 482002
PH :0761-4038001.

906. SHUBH MOTORS PVT LTD (5403-54-03), 156/5/1, 156/3KA, 156/3KHA, 156/3GHA, BEHIND OM PETROLEUM, ADHARTAL TIRAHA, JABALPUR, MADHYA PRADESH - 482002
PH :0761-6999952, 9755502292.

JAORA

907. PATEL MOTORS (INDORE) PVT. LTD. (P801-BFR-04), SURVEY NO.57/11/1, RATLAM ROAD, RATLAM NAKA, OPP. KOTHARI AGRIKO, INDUSTRIAL AREA, INFRONT OF ST. PAUL SCHOOL, JAORA, DISTT. RATLAM, MADHYA PRADESH - 457226
PH :243399, 9826634449, 9926932221.

JHABUA

908. PATEL MOTORS (AAR1-AAR-01), INDORE AHMEDABAD ROAD, MEGHNAGAR NAKA, JHABUA ,MADHYA PRADESH. - 457661
PH :07392-243399, '9826634449.

KATNI

909. SHUBH MOTORS PVT LTD (FK01-FK-01), WARD NO. 41 HEMU COLONY SHANTI NAGAR, BESIDE RELIANCE PETROL PUMP, KATNI, MADHYA PRADESH - 483501
PH :9755595596.

KHANDWA

910. NIMAR MOTORS (AU01-3R-03), BEFORE VIKAS UDYOG, INDORE ROAD, KHANDWA - 450001
PH :0733-2244088.

KHARGONE

911. NIMAR MOTORS (AU01-AU-01), JETAPUR,SANAWAD ROAD,KHARGAONE, - 462026
PH :07282-243285.

912. NIMAR MOTORS PVT. LTD. (AU01-AU-06), PH. NO. 35, VILLAGE – DANAPUR, TEHSIL – KHARGONE, DISTRICT – KHARGONE, MADHYA PRADESH. - 451001
PH :9669569504.

KHATEGAON

913. PRIME CARS PVT. LTD. (BXB1-BXB-01), SURVEY NO. 85/3, NEMAWAR ROAD, KHATEGAON, DISTRICT – DEWAS, MADHYA PRADESH - 455336
PH :7274-8889913306.

KOTMA

914. SHUBH MOTORS (DO01-DO-01), WARD NO.7, ANNUPPUR KOTMA ROAD, DISTT. ANNUPUR, KOTMA (M.P.) - 484336
PH :07658-233777.

KUKSHI

915. OCEAN MOTORS PVT. LTD. (BIO1-BIO-01), SURVEY NO.593/5/1, 593/6/1, BARWANI ROAD, TOLL KANTE KE PASS, TEHSIL-KUKSHI - 454331
PH :9009780030, 7389945443, 8085999990.

MAIHAR

916. CITY CARS (D702-GI-04), UNIT OF AGARWAL WHEELS PVT. LTD., NEAR RELIANCE PETROL PUMP, NH-7, REWA ROAD, MAIHAR (M.P.) - 485771
PH :07674-234575.

MANDLA

917. STANDARD AUTO AGENCIES (5402-WD-04), KATARA ROAD, MANDLA, DIST. MANDLA MP - 481661
PH :7642-260600,260622.

MANDSAUR

918. PATEL MOTORS (WC01-WC-01), NEAR SHIVANA BRIDGE,RATLAM MANDSAUR ROAD,MANDSAUR - 458001
PH :07422-400450, 220372.

MHOW

919. OCEAN MOTORS PVT. LTD. (WA01-WA-01), A.B. ROAD, NEAR KISANGANJ POLICE STATION, MHOW - 453441
PH :07324-7389936478, 266211.

MORENA

920. PREM MOTORS PVT. LTD. (RG01-RG-01), NEAR SALES TAX BARRIER SQUARE, AB ROAD MORENA - 476001
PH :07532-233101.

NARSINGHPUR

921. STANDARD AUTO AGENCIES (BB01-BB-01), KH. NO. 82/44 & 83/44, NB NO.519, PC NO. 19(42), OLD 46 (NEW) MOUZA RONSRA R.I.M. 2, TEHSIL & DISTRICT – NARSINGHPUR, MADHYA PRADESH. - 487001
PH :7792-232757.

NEEMUCH

922. AUTO SCAN (3T81-3T-01), MHOW ROAD,NEEMUCH,MADHYAPRADESH,
PH :07423-221912.

923. PATEL MOTORS (RATLAM) PVT LTD. (P801-3T-02), MHOW-NEEMUCH ROAD,NEEMUCH(MP),, - 458441 PH :07423-263883-4.

PANNA

924. CITY CARS (EQ01-EQ-01), KHASRA NO. 378, MOHAN RAJ VILAS CHOURAHA, BESIDE MOHAN RAJ HOTEL, CIVIL LINE NH-75, PANNA, MADHYA PRADESH . - 488001 PH :7672-223026, 222593.

PITHAMPUR

925. PATEL MOTORS (INDORE) PVT. LTD. (5303-BVD-04), 254-A, SECTOR-1, INDUSTRIAL AREA, PITHAMPUR, DISTT. DHAR - 454775 PH :722-4990999.

RAISEN

926. MY CAR (BHOPAL) PVT. LTD. (RF01-RF-01), NEAR BAGHEL TRACTORS BEFORE SALE TAX TOLL SAGAR ROAD - 464221 PH :9755550061.

RATLAM

927. PATEL MOTORS (INDORE) PVT LTD. (P801-P8-01), 76 C,D&E,INDUSTRIAL AREA,RATLAM - 452001 PH :07412-402529-31-32-33-41.

928. PATEL MOTORS (INDORE) PVT LTD. (P801-P8-03), 181/17/18,DOSHI GOAN,INDUSTRIAL AREA ,JAORA ROAD,RATLAM - 457001 PH :07412-261463, 261464 ,'9926932221.

REWA

929. CITY CARS (D702-M2-03), NYPASS CHURHATA,DIST. REWA - 482001 PH :07662-222021.

SAGAR

930. ADINATH MOTORS (G101-G1-01), STATION ROAD, TILAK GANJ, SAGAR (M.P). - 470001 PH :07582-403932 / 226560.

SAJAPUR

931. PRIME CARS (3Q01-ZC-02), LALGHATI , A B ROAD, SHAJAPUR - 465441 PH :7364-226333.

SANWER

932. MY CAR (INDORE) PVT. LTD. (AAJ1-AAJ-01), S.NO.356/3/1, OLD UJJAIN BYPASS ROAD,TALUKA SANWER, DISTT. INDORE. - 453551 PH :07321-220043,7389920507.

SATNA

933. CITY CARS (D702-D7-01), WARD NO. - 27,AMONGHA KALA,PANNA ROAD,SATNA - 485001 PH :07672-223026.

934. CITY CARS (D702-D7-05), (A UNIT OF AGRAWAL WHEELS PVT. LTD.), BESIDE BHASKAR PRESS, BEHIND MARUTI SHOWROOM, WARD NO.27, AMOUDHA KALA, PANNA ROAD, SATNA - 485001 PH :9754301199.

SEHORE

935. JEEWAN MOTORS (0302-EH-02), 869/1/2,OFFICERS COLONY,IN FRONT OF CHURCH GROUND,BHOPAL, INDORE ROAD - 466001 PH :0756 -2226400.

SEONI

936. KUNAL MOTORS (U501-8X-05), JYARAT NAKA, JABALPUR NAGPUR ROAD, SEONI (M.P.) - 480661 PH :07692-228158,8349999269.

SHADOL

937. SHUBH MOTORS (MF01-MF-01), JAMUA, NEAR GYAN GUPTA,BUDHAR ROAD,SHAHDOL, - 484771 PH :07652-231358 / 230110.

SHIVPURI

938. PREM MOTORS PVT. LTD. (3003-3U-04), A B ROAD,SIVPURI,, - 473551 PH :07492-221215.

SIDHI

939. CITY CARS (BKM1-BKM-01), ADHIYAR KHOH, NEAR GYAN DHARAMKATA, SIDHI, MADHYA PRADESH. - 486661 PH :7672-223026, 222593, 9754301199.

SIMROL

940. PATEL MOTORS PVT. LTD. (BZV1-BZV-01), PLOT NO. 13-14, SANJAY GANDHI NAGAR, INDORE KHANDWA RD, GRAM - SIMROL, TEHSIL – MHOW, DISTRICT – INDORE, MADHYA PRADESH . - 452020 PH :07295-9977703512, 232228.

SUJALPUR

941. PRIME CARS PVT. LTD. (3Q01-BJO-04), 363/1 DEHANI JOD, ASHTA ROAD, NEAR SOYA PLANT SHUJALPUR, MADHYA PRADESH - 465333 PH :8889913304 & 08889913341.

TIKAMGARH

942. ADINATH MOTORS (RE01-RE-01), NEAR MAU CHUNGI NAKA, TIKAMGARH (M.P.) - 472001 PH :07683-247469.

UJJAIN

943. RUKMANI MOTORS (P) LTD (3W02-3W-01), SURVEY NO. 59/3, DEWAS ROAD,UJJAIN - 456010 PH :0734-4052000.

UMARIA

944. SHUBH MOTORS (5403-BVY-04), 8/2 GRAM BHAGRA, KIRANTAL KHURD, UMARIA DISTRICT UMARIA (MADHYA PRADESH) - 484661 PH :0761-6009333.

VIDISHA

945. MY CAR PVT. LTD. (AY01-AY-01), SURVEY NO. 102, VILLAGE – RANGI, TEHSIL – VIDISHA, VIDISHA, (M.P) . - 464001 PH :7592-9755550071, 297067.

WAIDHEN

946. CITY CARS (D702-JJ-02), NEAR VIJAY BANDHU PETROL PUMP, KACHANI, THE. WAIDHEN, DISTRICT, SINGRAULI ,MADHYA PRADESH - 486886 PH :07662-222021, 8889917774.

MAHARASHTRA

AHMEDNAGAR

947. VIJAY AUTOMOBILES (A581-A5-01), OPP. MSEB SUB STATION, NAGAR-PUNE ROAD, KEDGAON, AHMEDNAGAR PH :0241-2550049.

948. KANKARIYA AUTOMOBILES PVT LTD (A501-A5-01), SARDA MILLS,SAVEDI ROAD,AHMEDNAGAR, MAHARASTRA - 414001 PH :0241-9403961540.

949. KANKARIYA AUTOMOBILES PVT LTD (A501-A5-05), MIDC, AHMEDNAGAR - 414003 PH :0241-2777131.

AKLUJ

950. CHAVAN AUTOMOBILES(CHAVAN MOTORS DIVISION INDIA P) (B102-RU-04), PLOT NO. 15/3-A, PANCHVATI STOP,MALINAGAR ROAD,AKLUJ - 413101 PH :02185-223033.

AKOLA

951. KHANDELWAL AUTOWHEELS PVT.LTD (F101-F1-01), TIRUPATI CHAMBERS,CONVENT ROAD,AKOLA - 444005 PH :0724-2429404,2440409,2420061.

ALIBAUG

952. SIMRAN MOTORS (7S01-3X-05), SURVEY NO. 30/1, OPP. RCF COLONY, VILLAGE – VESHVI, ALIBAUG, DISTRICT – RAIGAD, MAHARASHTRA - 402201 PH :02141-226344.

AMBEGAON

953. THE KOTHARI WHEELS (1906-AGA-04), SOHAM NAGARI, A-WING, SHOP NO.8 & 16, PUNE NASIK HIGHWAY, A/P MANCHAR, TALUKA: AMBEGAON, DISTT: PUNE, MAHRASHTRA - 410503 PH :02132-223083/93.

AMRAVATI

954. ASPA BANDSONS AUTO (P) LTD (F201-F2-01), SATURNA BADNERA ROAD,AMRAVATI,MAHARASTRA, - 444607 PH :0721-2510475/76/77.

955. ASPA BANDSONS AUTO (P) LTD (F201-F2-05), A1/A2, OLD BY PASS ROAD, MIDC, AMRAVATI, DIST: AMRAVATI, MAHARASTRA. - 444607 PH :0721-2520085.

AURANGABAD

956. AUTOMOTIVE MANUFACTURERS LTD. (2102-21-01), PLOT NO. 1,P.B.NO. 716,CHIKALTHANA,AURANGABAD - 431210 PH :0240-6640500/6640555.

957. AUTOMOTIVE MANUFACTURERS LTD. (2102-21-03), C-27,MIDC, CHIKALTHANA , N/R LUPIN LABORATORIES, AURANGABAD, MAHARASHTRA - 431006 PH :240-2484911.

958. PAGARIYA AUTO PVT LTD (2103-21-01), OPP. OLD HIGH COURT, NEAR HOTEL ASHOKA EXECUTIVE, JALANA ROAD, AURANGABAD - 431005 PH :0240-240665902.

959. PAGARIYA AUTO PVT LTD (2103-21-05), GAT NO. 46, PLOT NO. 50, NEAR MASTER COOK RESTAURANT (KAILASH HOTEL) BEED BYPASS ROAD, AURANGABAD, MAHARASHTRA - 431005 PH :9860999468.

960. PAGARIYA AUTO PVT LTD (2103-21-06), PLOT NO.A-35 MIDC, NEAR MAIN RAILWAY STATION, AURANGABAD - 431001 PH :0240-6504141.

BADLAPUR

961. PRAKASH AUTO PVT. LTD. (9O01-9O-01), SHOP NO. 2, S. NO. 16, PLOT NO. 25 & 26, KRISHNA WATER SUPPLY, OPP. INDIAN OIL PETROL PUMP, MIDC ROAD, KATRAP, BADLAPUR (EAST) - 421503 PH :0251-9321352333.

BALLARPUR

962. TRISTAR CARS (H302-ZH-04), PLOT NO.11, BEHIND ZAWERI PETROL PUMP, NEAR GURU NANAK COLLEGE, ALLAPALLI ROAD, BAMNI, TAH. BALLARPUR - DIST. - 442701 PH :9272222412/13.

BARAMATI

963. MAHALAXMI AUTOMOTIVES PVT. LTD.
(7R01-7R-01), BARAMATI- PHALTAN RD., KASBA, BARAMATI, DIST. PUNE - 413102
PH :02112-229005.

BARSHI

964. CHAVAN MOTORS (BBA1-BBA-01), GAT NO.1407/1, LATUR ROAD, NEAR ESSAR PETROL PUMP, BARSHI. - 413401
PH :2184-229666.

BHANDARA

965. AUTOMOTIVE MANUFACTURERS LTD.
(2001-FG-03), JINDAL'S BLDG, NEAR NAVKAR PETROL PUMP, SAINATH NAGAR, NH-6, BHANDARA - 441904
PH :07184-250542/251542.

BHIVANDI

966. S K WHEELS PVT. LTD. (IX01-IX-02), SURVEY NO. 43/1E, VILLAGE SONALE, NH-8, MUMBAI-NASHIK HIGHWAY, BHIVANDI, THANE - 421302
PH :0252-2657484/9930545454/61768000.

BHOR

967. SEHGAL AUTORIDERS PVT. LTD.
(BSV1-BSV-01), GUT NO. 929/1, UTTROLI, BHOR, TALUKA – BHOR, DISTRICT – PUNE, MAHARASHTRA. - 412206
PH :8888881348, 8888881399.

BOISAR

968. SPECTRA MOTORS (ES01-ES-01), PLOT NO.J-240, TARAPUR INDUSTRIAL AREA, VILLAGE-SARAVALI, BOISAR, PALGHAR, THANE (MAHARASHTRA) - 401501
PH :02525-645180/661088.

BRAMHAPURI

969. TRISTAR CARS PVT LTD (H302-TW-02), 165, NAVEGAON, NEAR VIDYANIKETAN SCHOLL, WADSA ROAD, BRAHMPURI, DIST: CHANDARPUR, MAHARASHTRA - 441206
PH :9272222406/7/8.

CHALISGAON

970. MANRAJ MOTORS PVT LTD (AAE1-AAE-01), SL. NO 406, PLOT NO. 2, NEAR HOTEL RANI PARK, DHULE ROAD, CHALISGAON, DIST: JALGAON, MAHARASHTRA. - 424101
PH :02589229320.

CHANDGAD

971. SAI SERVICE PVT. LTD. (BTF1-BTF-01), GAT NO.360, G.P.M NO.157, A/P HALKARNI TALUKA CHANDGAD, DISTT. KOLHAPUR, MAHARASHTRA. - 416507
PH :02320-239339.

CHANDRAPUR

972. TRISTAR CARS PVT LTD (H302-H3-01), NR. HOTEL KUNDAN PLAZA,NAGPUR ROAD,CHANDRAPUR - 442401
PH :07172-9272222401/2.

973. TRISTAR CARS PVT LTD (H302-H3-03), NAGPUR ROAD, CHANDRAPUR - 442401
PH :07172-9272222403/4.

CHIPLUN

974. JAGRUT MOTORS P. LTD. (9A01-9A-01), SURVEY NO-543, NH-17, MUMBAI-GOA HIGHWAY,AT-KALAMBASTE,TAL-CHIPLUN, DIST-RATNAGIRI,MAHARASHTRA - 415605
PH :02355-252238.

DAHANU

975. SAI SERVICE PVT. LTD. (V901-TD-03), DAHANU-JAWAHAR ROAD, DAHANU(E), TAL-DAHANU, DIST. TAHNE - 401602
PH :8975003138 /02528-225060/70/80/8975003140.

DAPOLI

976. JAGRUT MOTORS P. LTD. (G301-VG-06), AT/POST-DAPOLI, DAPOLI-KHED ROAD,DAPOLI.DIST RATANAGIRI. - 415712
PH :02358-267272,252238.

DHULE

977. SEVA AUTOMOTIVE LTD. (P301-P3-01), GATE NO. 90,AWADHAN,MUMBAI AGRA ROAD,DHULE - 424001
PH :02562-281128/29.

DINDORI

978. AUTOMOTIVE MANUFACTURERS LTD. (AAF1-AAF-01), S.NO.753, NEAR PANDAV PETROL PUMP,NASIK DINDORI ROAD, TAL. DINDORI, DISTT. NASIK - 422202
PH :02557-222021.

DOMBIVALI

979. FORT POINT AUTOMOTIVE (CARS) PVT. LTD. (3906-JS-02), C/O NIRUP TEXTILES, C-3 & 4, MIDC PHASE-1, DHARMA KANTA, NEAR TATA POWER, DOMBIVALI (EAST). - 421201
PH :251-2449789,2445557/8.

DOMBIVILI

980. AUTOMOTIVE MANUFACTURERS LTD. (3901-JS-02), PLOT NO. B-43, PHASE-1,DOMBIVALI INDUSTRIAL AREA, DOMBIVALI,DISTT-THANE, MAHARASHTRA, - 421201
PH :0251-2800492/4/5.

GADCHIROLI

981. BARBATE AUTOMOTIVE (INDIA) PVT. LTD. (ARYA CARS) (ZK02-ZK-01), PLOT NO. 10, GANESH NAGAR, MUL ROAD, GADCHIROLI , MAHARASTRA - 442702
PH :07132-232220.

GADINGALAJ

982. SAI SERVICE PVT. LTD. (3802-DB-04), 581/7B, PLON NO-12, SANKESHWAR ROAD, OPP. HOTEL NEELKAMAL, TAL. GADINGLAJ - 416502
PH :02327-222239.

GANGAPUR

983. PAGARIYA AUTO PVT LTD (2103-MC-03), E-16,WALUJ,AURANGABAD - 431001
PH :0240-2406617790.

GONDIA

984. ARYA CARS (UNIT OF BARBATE AUTOMOTIVE INDIA PVT. LTD.) (2004-4C-02), ITI ROAD,NR. FULCHUR NAKA,OPP LAXMI FLOUR MILL,GONDIA - 441601
PH :07182-234567.

GUHAGAR

985. JAGRUT MOTORS PVT. LTD. (BJV1-BJV-01), SURVEY NO. 23A, SHRUNGALTALI, GUHAGHAR-CHIPLUN ROAD, GUHAGAR, RATNAGIRI, MAHARASHTRA - 415703
PH :9404923981.

HINGANGHAT

986. SEVA AUTOMOTIVE PVT. LTD. (CDZ1-CDZ-01), PLOT NO. P-1, HINGANGHAT INDUSTRIAL AREA, NH-7, AJANTI, HINGANGHAT, TALUK – HINGANGHAT, DISTRICT – WARDHA, MAHARASHTRA. - 442301
PH :9689871099.

ICHALKARANJI

987. SAI SERVICE PVT. LTD. (4D01-4D-01), GATE NO. 107,KOLHAPUR ROAD,KABNOOR,ICHALKARANJI - 416122
PH :0230-2425282.

INDAPUR

988. MAHALAXMI AUTOMOTIVES PVT. LTD. (7R01-NQ-02), STATE HIGHWAY NO. 151, INDAPUR - 412219
PH :02112-2117222500.

ISLAMPUR

989. CHOWGULE INDUSTRIES PVT. LTD. (PJ02-PJ-01), GATE NO.905/A/3, NEAR BOMBAY RAYAN, PUNE-BANGALOE HIGHWAY (NH-4), ISLAMPUR TALUKA : WALVA, DIST:SANGLI - 415409
PH :225757.

JALGAON

990. MANRAJ MOTORS PVT LTD (C401-C4-01), AJINTA ROAD, MIDC INDL AREA, JALGAON - 425003
PH :0257-2212122/23/24.

JALNA

991. AUTOMOTIVE MANUFACTURERS LTD. (2102-BC-02), PLOT NO. 4 & 5 , CTS NO. 11427/4-A, BALAJI COMPLEX, JALNA-AURANGABAD ROAD, JALNA, - 431203
PH :02482-221143.

JATH

992. CHOWGULE INDUSTRIES PVT. LTD. (J102-BLX-05), PLOT NO. 12, SAWANT ESTATE, MORE COLONY, OPP. CATTLE BAZAR, SATARA ROAD, JATH, DISTRICT SANGLI, MAHARASHTRA - 416404
PH :02341 -246598.

JAYSINGPUR

993. SAI SERVICE PVT. LTD. (ASA1-ASA-01), GATE NO. 1239, NEAR ACHRYA TULSI BLOOD BANK, A/P UDGAON(JAYSINGHPUR), TALUKA:SHIROL, DIST: KOLHAPUR - 416134
PH :02322-225959.

KANKAVALI

994. JAGRUT MOTORS P. LTD. (G301-V7-05), PLOT NO.32-33,SURVEY NO.-1886/1,,MUMBAI-GOA HIGHWAY (NH-17),JANAVLI,KANKAVLI,MAHARASHTRA - 416002
PH :02367-232872/203977 , (91)9881467572.

KAPHOLI

995. S K WHEELS PVT LTD (0515-9C-02), PLOT NO. 42,N-47 , KAPHOLI INDUSTRIAL AREA,MUMBAI -PUNE HIGHWAY,MUMBAI - 410203
PH :02192-266243/266470,02192-266243.

KARAD

996. CHOWGULE INDUSTRIES PVT. LTD. (F303-4E-02), 112/3, PUNE-BANGALORE ROAD, NEAR RELIANCE GAS PUMP, A/P MALKAPUR, TAL. KARAD, DISTT. SATARA - 415110
PH :02164-660000.

KARJAT

997. SIMRAN MOTORS (7S01-TA-03), PANVEL-KARJAT ROAD, KARJAT, DIST. RAIGAD - 410201
PH :8108194564.

KAVATE MAHANKAL

998. CHOWGULE INDUSTRIES PVT. LTD. (SC02-SC-01), MAHANKALI BAAZAR, KAVATE MAHANKAL-JAT ROAD, KAVATE MAHANKAL, SANGLI, MAHARASHTRA - 416405
PH :02341-222102.

KHAMGAON

999. MANRAJ MOTORS PVT LTD. (BXU1-BXU-01), GAT NO 41, OLD SURVEY NO. 12/1A, NEAR AMRUT PETROL PUMP, AKOLA ROAD, KHAMGAON , MAHARASHTRA - 444303
PH :07263-250002/3.

KHARGHAR

1000. EXCELL AUTOVISTA PVT LTD (AAC1-AAC-01), SURVEY NO.742/439, KOPRA VILLAGE, SECTOR-10, SION-PANVEL HIGHWAY, KHARGHAR, DIST. RAIGAD - 410210
PH :022-65999111.

KOLHAPUR

1001. SAI SERVICE PVT. LTD. (3802-38-01), PLOT NO. 1, E WARD, BEHIND PARVATI TALKIES, SHIVAJI UDYAMNAGAR, KOLHAPUR - 416008
PH :0231-2661676.
1002. SAI SERVICE PVT. LTD. (3803-38-01), C-6, SHIROLI MIDC, MENON OPP MENON PISTONS,NH-4, KOLHAPUR - 416122
PH :0230-2468376.
1003. SAI SERVICE PVT. LTD. (3802-38-06), R S NO. 1018/1, PLOT NO. 28, APATE NAGAR, KALAMBA RING ROAD, KOLHAPUR, MAHARASHTRA. - 416012
PH :0231-2329495.

KONGAON

1004. PRAKASH AUTO PVT. LTD. (3903-AZ-02), SURVEY NO.126/127,98/38,AT & POST KONGAON, - 421302
PH :0252-2280264.

KUDAL

1005. JAGRUT MOTORS PVT. LTD. (9B01-9B-01), SURVEY NO. 50/5, 51/5, A/P PINGULI, TEMBDHURI, TALUKA – KUDAL, DISTRICT – SINDUDURG, MAHARASHTRA - 416520
PH :02362-202423.

LATUR

1006. AUTOMOTIVE MANUFACTURERS LTD. (V801-V8-02), PLOT NO. 28, 29, 30, SURVEY NO. 36, VARVATTI VILLAGE, LATUR - BARSHI ROAD, LATUR - 413512
PH :02382-609111/609222.
1007. AUTOMOTIVE MANUFACTURERS LTD. (V801-V8-01), CITY SURVEY NO. 2960, NANDED ROAD, OPP. TIRUPATHI LODGE, LATUR - 413512
PH :02382-661909.

MAHAD

1008. SIMRAN MOTORS (7S01-TX-04), NEAR RELIENCE PUMP, PANVEL-GOA ROAD, MAHAD, DIST. RAIGAD - 402301
PH :02145-223123.

MALEGAON

1009. SHAAN CARS PRIVATE LIMITED (3703-FF-02), PLOT NO. 572/81,CHANDANPURI SHIVAR,OLD MUMBAI, AGRA ROAD, DIST- NASIK,MALEGAON - 423203
PH :02554-237200/237201.

MANGAON

1010. SIMRAN MOTORS PVT. LTD. (BAM1-BAM-01), SURVEY NO.97, AT-POST-NANORE, NH-17, MUMBAI-GOA HIGHWAY, MANGAON, RAIGAD, MAHRASTHRA. - 402104
PH :02140-261118.

MIRAJ

1011. CHOWGULE INDUSTRIES PVT. LTD. (J102-SD-03), 42C , OPP. WHISPERING WOODS, MIDC AREA, TALUKA MIRAJ, DISTT. SANGLI, MAHARASHTRA - 416410
PH :0233-2643221, 22.

MUMBAI

1012. EXCELL AUTOVISTA PVT LTD (0510-05-01), RESHAM SINGH COMPOUND,CST ROAD,KALINA, SANTACRUZ EAST,MUMBAI - 400098
PH :022-67743888,26653242, 43, 46.
1013. SAH & SANGHI AUTO AGENCIES PVT.LTD (0505-05-01), PRAKASH MILLS COMPOUND,OFF. GLOBE MILLS PASSAGE,WORLI,MUMBAI - 400013
PH :022-24925452/53/54, 24965379/80,4925452, 53.
1014. SAI SERVICE PVT. LTD. (0504-05-01), 462 SENAPATI BAPAT MARG,WORLI NAKA,LOWER PAREL,MUMBAI - 400013
PH :022-43030404/43030400.
1015. SAI SERVICE PVT. LTD. (0504-05-02), ARVIND CHAMBERS,194 ANDHERI KURLA ROAD, ANDHERI(EAST), MUMBAI - 400069
PH :022-43030606 /600,8356242,.
1016. SAI SERVICE PVT. LTD. (0504-05-04), C/O SHAKTI INDUSTRIAL WIRE COMPOUND,DATTA PADA ROAD,BORIVILI (EAST),MUMBAI - 400066
PH :022-4303 0111/103/104/118/120,28707000.
1017. SPECTRA MOTORS LIMITED (0508-05-01), PLOT NO.4 & 5,GANESH PLOT OWNER'S ASSN., RAMACHANDRA LANE EXTN. KANCH PADA, MALAD(WEST) MUMBAI - 400064
PH :022-67696063/62/65/80/85/58/68/94,8898999.
1018. SPECTRA MOTORS LIMITED (0508-05-02), PLOT NO. 165, CABLE CORPORATION OF INDIA, OFF WESTERN EXPRESS HIGHWAY, BORIVLI (EAST) - 400066
PH :022-66908823/66908826,28542185.
1019. SPECTRA MOTORS LIMITED (0508-05-03), GANDHI PAREKH INVESTMENT CORP. LTD, CTF NO. 170, MUMBAI AGRA ROAD, NEXT TO ASHOK SILK MILL COMPOUND, LBS MARG,GHATKOPAR WEST, MUMBAI - 400086
PH :022-66440000 /66440111/ 9967017486,66440000.
1020. SPECTRA MOTORS LIMITED (0523-05-01), GHATLA VILLAGE, CHEMBUR, MUMBAI - 400071
PH :022 -25200600/25200990/ 25200300 /25208666.
1021. VITESSE TRADING LIMITED (0503-05-01), SHAH INDL.ESTATE, PLOT 11 LINK ROAD, ANDHERI (WEST), MUMBAI - 400058
PH :022-26730787/26730280/26730296,6367018.
1022. VITESSE TRADING LIMITED (0503-05-02), 77 AF PALKY GULLY,OFF VEER SAVARKAR MARG, PRABHADEVI, MUMBAI - 400025
PH :022-24229747,4223933.
1023. AUTOMOTIVE MANUFACTURERS LTD. (3901-05-04), PLOT NO. 108, BAZAR WARD, KURLA(WEST) , MUMBAI - 400070
PH :022-61563734 / 61563744 / 61563715.
1024. FORT POINT (0521-05-02), D-9, STREET NO. 21, OPP PATNI COMPUTERS, SEEEPZ, MIDC, ANDHERI, MUMBAI - 400096
PH :022-41157777, 42432121/2131.
1025. SHIVAM AUTOZONE (0531-05-01), CHARKOP INDUSTRIAL ESTATE, KANDIVLI(WEST), MUMBAI, MAHARASHTRA - 400067
PH :022-41099999.
1026. VITESSE PVT. LTD. (0503-05-07), PLOT NO.A59, KANDIVALI INDUSTRIAL CO-OP. SOC., GOVERNMENT INDUSTRIAL ESTATE, CHARKOP, KANDIVALI (W), MUMBAI - 400067
PH :022-28674753/28674754,24229747.
1027. SPECTRA MOTORS PVT. LTD. (0508-05-07), C/O DON BOSCO INSTITUTE, VAZIRA NAKA, OFF CHANDARKAR ROAD, BORIVALI WEST, MUMBAI. - 400092
PH :022-28988800.
1028. FORTPOINT AUTOMOTIVE (CARS) PVT. LTD. (0521-05-03), C/O VARUN STEEL INDUSTRIES,AAM TOOL COMPOUND,BOAT HURT ROAD, BEHIND SEWARI POLICE STATION, DARUKHANA, REAY ROAD, MUMBAI - 400010
PH :022-64550650.
1029. K.T.S. AUTOMOTORS PVT. LTD. (0582-05-02), C/O-COZY INDIA, 5, HANSRAJ LANE, BYCULLA, MUMBAI - 400027
PH :022-23751234,23752301/2/3/5/6.
1030. PARAMOUNT WHEELS PVT. LTD. (3911-05-02), CITY SURVEY NO. 639/246, SANTOSH NAGAR, FILM CITY ROAD, GOREGAON (E), MUMBAI - MAHARASHTRA - 400065
PH :022-28403742.
1031. S K WHEELS PVT. LTD. (0554-05-01), CTS NO. 151, RAM MANDIR ROAD, SOMANI GRAM, NEXT TO CENTRAL WAREHOUSE CORP., OSHIWARA, GOREGAON (WEST), MUMBAI – 400 104, MAHARASHTRA. - 400104
PH :022-9930545454.
1032. SHIVAM AUTO ZONE (I) PVT. LTD. (0531-05-02), PLOT NO. 82-ABCD, KANDIVALI INDUSTRIAL ESTATE, OPP. CHARKOP POST OFFICE, CHARKOP, KANDIVALI (WEST), MUMBAI, MAHARASHTRA. - 400067
PH :022-9870934444, 41099999.
1033. KIRAN MOTORS MAHARASHTRA (05A1-05-01), PLOT NO. B-62/41A, SHREYAS INDUSTRIAL, OFF. NEW LINK ROAD, ANDHERI (WEST), MUMBAI. - 400053
PH :7700934505.

MURBAD

1034. PRAKASH AUTO PVT. LTD. (BYO1-BYO-01), SURVEY NO. 61/2, KALYAN - MURBAD ROAD, VILLAGE – DAHAGAON, TALUKA – MURBAD, DISTRICT – THANE, MAHARASHTRA. - 421605
PH :9028342725.

MURGUD

1035. SAI SERVICE PVT. LTD. (AWA1-AWA-01), R.S. NO. 188/4, A/P MURGUD, TALUKA: KAGAL, DIST: KOLHAPUR - 416219
PH :02325- 265553.

NAGPUR

1036. ARYA CARS (UNIT OF BARBATE AUTOMOTIVE INDIA PVT. LTD.) (2004-20-01), NEAR PARDY NAKA (OUTSIDE), NH-6, BHANDARA ROAD,NAGPUR - 440035
PH :0712-6688333.
1037. AUTOMOTIVE MANUFACTURERS LTD. (2001-20-02), 575 KAMPTEE ROAD,NAGPUR-26,, - 440026
PH :0712-2630550/6662000/6662001/2652551/2648341 .
1038. SEVA AUTOMOTIVE LTD. (2002-20-01), 34/3, KACHIMET AREA, NEAR VAYUSENA NAGAR BUS STOP, WADI, AMRAVATI ROAD, NAGPUR - 440023
PH :0712-2500231/6652800.
1039. SEVA AUTOMOTIVE LTD. (2002-20-03), PLOT NO. 33A, CENTRAL MIDC, HIGNA ROAD, NAGPUR, MAHARASHTRA, - 440016
PH :07104-666444.
1040. AUTOMOTIVE MANUFACURERS PVT. LTD (2001-20-05), PLOT NO. 38/1, NEAR BOUDDHA VIHAR, OPP. DELHI PUBLIC SCHOOL, KAMPTEE ROAD, NAGPUR, MAHARASHTRA - 441001
PH :0712-6555013/14.
1041. ARYA CARS (UNIT OF BARBATE AUTOMOTIVE INDIA PVT. LTD.) (2007-20-01), PLOT NO. 4, NEW COTTON MARKET, GHAT ROAD, NAGPUR, MAHARASTRA - 440018
PH :0712-6664777.

1042. ARYA CARS (UNIT OF BARBATE AUTOMOTIVE INDIA PVT. LTD.) (2007-20-02), PLOT NO. 131, NH-6, BHANDARA ROAD, MAHALGAON, NAGPUR, MAHARASTRA. - 441202
PH :8888819524.

NANDED

1043. SEVA AUTOMOTIVE LTD. (6801-68-01), NANDED HYDERABAD ROAD, NANDED - 431604
PH :02462-241599.

NANDURBAR

1044. SEVA AUTOMOTIVE LTD. (P301-KW-02), PLOT NO.- 3& 4, BANSITAL NAGAR, NEAR HOTEL KARAN GARDEN HOWFULLY BYE PASS ROAD, NANDURBAR,DIST.- SATARA. - 425412
PH :02564-233000.

NARAYANGAON

1045. THE KOTHARI WHEELS (1906-FV-02), GATE NO. 747, PUNE NASIK HIGHWAY, WARULWADI, NARAYANGAON - 410504
PH :02132-244002.

NASHIK

1046. AUTOMOTIVE MANUFACTURERS LTD. (3702-37-01), P-1-12,ADDITIONAL NASIK INDL. AREA,AMBAD,NASIK - 422010
PH :0253-6636300/6636329/312/314/317.
1047. SEVA AUTOMOTIVE LTD. (3701-37-01), PLOT NO. X - 46,MIDC. AMBAD, NASIK - 422010
PH :0253-2386537.
1048. SHAAN CARS PRIVATE LIMITED (3703-37-01), E-3 MIDC AREA,SATPUR , NASIK,MAHARASHTRA - 422007
PH :0253-2351372.
1049. SEVA AUTOMOTIVE PVT LTD (3701-37-07), PLOT NO.A-23, NICE INDUSTRIAL AREA, MIDC, SATPUR, NASIK (MAHARASHTRA) - 422006
PH :0253-6604444.
1050. SEVA AUTOMOTIVES PVT LTD (3701-37-08), SHOP NO. 1 & 2, SER. NO. 241/1-B-1/2, OPPOSITE NMC SCHOOL, DINDORI ROAD, MAHSRUL, NASHIK, MAHARASHTRA - 422004
PH :0253-6654444.

NASIK

1051. SHAAN CARS PRIVATE LIMITED (3703-37-04), 03/810, NEAR NASARDI BRIDGE, WADALA ROAD, NASIK ROAD, NASIK - 422011
PH :0253-2236080.
1052. SEVA AUTOMOTIVE LTD. (3701-37-06), SEVA FARMS, GATE NO. 82/2, AMBE BAHULA ROAD, VILHOLI, TALUKA & DISTRICT: NASIK, MAHARASHTRA - 422010
PH :0253-6642444.

NAVI MUMBAI

1053. AUTOMOTIVE MANUFACTURERS LTD. (3901-9K-01), D-234 MIDC TTC INDL AREA,SHIRVANE NERUL,NEW BOMBAY, - 400706
PH :022-40183900/40183923/24/28,7614603.
1054. S K WHEELS PVT LTD (0515-9K-01), D-267,TTC INDUSTRIAL AREA,TURBHE,NEW BOMBAY - 400075
PH :022-27625122, 022 - 27625102,27689910, 20, 30, 40.
1055. EXCELL AUTOVISTA PVT LTD (AAC1-9K-02), PLOT NO-9,MIDC,NAVADE,TALOJA, TAL-PANVEL ,DIST-RAIGAD - 410208
PH :022-27405555.

OSMANABAD

1056. CHAVAN AUTOMOBILES(CHAVAN MOTORS DIVISION INDIA P) (B102-LW-03), PLOT NO. 1, TAWADE COMPLEX,PRERANA NAGAR,OSMANABAD, - 413501
PH :02472-228666.

PALGHAR

1057. SAI SERVICE PVT. LTD. (TE01-TE-01), SURVEY NO. 86/1, TEMBHODE, MANOR-MAHIM ROAD, PALGHAR, DISTRICT: THANE - 401404
PH :2525-8308806722.

PALUS

1058. CHOWGULE INDUSTRIES PVT. LTD. (J102-0Z-04), PLOT NO.B-3, MIDC AREA, TALUKA PALUS, DISTT. SANGLI. - 416308
PH :02346-229021.

PANDHARPUR

1059. CHAVAN AUTOMOBILES(CHAVAN MOTORS DIVISION INDIA P) (B102-0H-05), GAT NO.56, ESABAVI, PUNE ROAD, TAL:PANDERPUR, SOLAPUR - 413001
PH :02186-228666.

PANVEL

1060. SIMRAN MOTORS (7S01-7S-01), PLOT2-8,SECTOR-15, OPP. HOTEL GARDEN,OLD MUMBAI PUNE HIGHWAY,PANVEL - 410206
PH :022-27488000,27462605, 27490365.
1061. AUTOMOTIVE MANUFACTURERS LTD. (3901-7S-03), PLOT NO:92/1, VILLAGE KOLAKHA, MUMBAI-GOA HIGHWAY, PANVEL, DISTT. RAIGAD - 410206
PH :09272237071 TO 94,.
1062. K.T.S. AUTOMOTORS PVT. LTD. (0582-7S-01), VILLAGE: APTA, OPP. APTA RAILWAY STATION, LADIWALI, DIST: RAIGAD, PANVEL (MAHARASHTRA) - 410207
PH :9420611356/94206611326.

PATAS

1063. MAHALAXMI AUTOMOTIVES PVT. LTD. (7R01-PR-03), PUNE-SOLAPUR HIGHWAY, PATAS, TALUKA DAUND DISTT.-PUNE - 413106
PH :02111-225009.

PEN

1064. SIMRAN MOTORS (9I01-9I-01), AT POST – VADKHAL NAKA, NH-17, MUMBAI GOA HIGHWAY, TAL – PEN, DISTT. RAIGAD - 402107
PH :02143-269073.

PHALTAN

1065. CHOWGULE INDUSTRIES PVT. LTD. (KH02-KH-01), PLOT NO.83/1B/1, LONAND-PUNE ROAD, PHRANANDWADI, TALUKA:PHALTAN, DISTRICT: SATARA, MAHARASTRA. - 415523
PH :02161-200455.

PIMPLEGAON

1066. AUTOMOTIVE MANUFACURERS PVT LTD (BAY1-BAY-01), GAT NO.517/P NEAR MARKET COMMITTEE, MUMBAI AGRA HIGHWAY, NH3 A/P PIMPALGAON BASWANT, TALUKA: NIPHAD, DIST-NASHIK - 422202
PH :02550-252808.

PUNE

1067. MARUTI CARE POINT (1981-19-02), 17/1, RAHATANI, AUNDH-CHINCHWAD ROAD. OPP PCMC 'D' PRABHAG KARYALAY, NEXT TO HP SUBHIKA PETROL PUMP, RAHATNI, PUNE, MAHARASHTRA
PH :020-65001981.
1068. ACE KUDALE CAR PVT. LTD. (1910-19-01), 36/2C/1, MANRAJ BUDRUK, PUNE-SOLHAPUR ROAD, TALUKA HAVELI, DISTRICT PUNE - 412201
PH :020-30456441/447/413.
1069. CHOWGULE INDUSTRIES PVT. LTD. (1908-19-02), S.NO. 53,PUNE SATARA HIGHWAY,KATRAJ,PUNE - 411046
PH :020-26959460; 66786200.
1070. CHOWGULE INDUSTRIES PVT. LTD. (1911-19-01), S.NO.1, NEXT TO PODAR INTERNATIONAL SCHOOL, KATRAJ BYPASS ROAD, AMBEGAON-B, TALUKA-HAVELI, PUNE - 411046
PH :020-66803555.
1071. MY CAR (PUNE) PVT LTD (1907-19-01), SURVEY NO. 131, MUMBAI BANGALORE HIGHWAY, WAKAD, PUNE - 411057
PH :020-3988333/39810920.
1072. SAI SERVICE PVT. LTD. (1901-19-01), BOMBAY PUNE ROAD, FUGEWADI, PUNE - 411012
PH :020-46404440/48.
1073. SAI SERVICE PVT. LTD. (1901-19-02), 889/90 J.M.ROAD, DECCAN GYMKHANA, PUNE - 411004
PH :020-41401141/40.
1074. SAI SERVICE PVT. LTD. (1901-19-03), S.NO.15A GIDWANI COMPOUND, KONDWA BUDRUK, HAVELI, PUNE - 411046
PH :020-41402222/240/241/242/243.
1075. SAI SERVICE PVT. LTD. (1901-19-05), NEAR NIGDI-BHOSARI ROAD, CHINCHWAD, PUNE - 411019
PH :020-46605999/95.
1076. THE KOTHARI WHEELS (1906-19-01), 110/A, PUNE SOLAPUR ROAD, NEAR FATIMA NAGAR, PUNE - 411039
PH :020-66874100.
1077. WONDER CARS (P) LTD (1903-19-02), 12, NPS LINES,SOLAPUR ROAD,,OLD POOL GATE,CAMP, PUNE - 411001
PH :020- 26332934/35.
1078. SEHGAL AUTORIDERS (1913-19-01), SURVEY NO. 51, BAVDHAN KHRUD, TAL: HAVELI, DIST: PUNE - 411021
PH :020-8308304444/41463625/41463627.
1079. SAI SERVICE PVT. LTD. (1901-19-06), SURVEY NO.244/1, PHASE-II, NEAR BANK OF MAHARASHTRA, HINGEWADI, TAL - MULSHI, DISTRICT-PUNE,MAHARASHTRA - 411057
PH :020-204200700.
1080. ACE KUDALE CAR PVT. LTD. (1910-19-02), ATLAS TANKS VESSELS, SR. NO 232/2, PUNE-NASIK ROAD, KHANDOBAMAL, BHOSARI, PUNE. - 411039
PH :020-2030662009.
1081. THE KOTHARI WHEELS (1906-19-03), PLOT NO. 2B, D1 BLOCK, CHINCHWAD, PUNE, DIST. PUNE - 411019
PH :020-66352600.
1082. MAHALAXMI AUTOMOTIVES PVT. LTD. (1912-19-03), 59/A, MUNDHWA KHARADI ROAD, OPP. MUNDHWA POLICE STATION, MUNDHWA, PUNE, MAHARASHTRA - 411036
PH :020-30217000,67270000.
1083. SUMANKIRTI CARS PVT. LTD. (1915-19-01), SR. NO.131 OPP. SAI PETROL PUMP, PUNE MUMBAI EXPRESSWAY, TAHWADE, PUNE - 411033
PH :020-66333209.
1084. WONDER CARS PVT. LTD. (1903-19-03), PLOT NO.52/1 BLOCK F2, MIDC, PIMPRI, PUNE. - 411018
PH :020-27130171/2/3/8.
1085. SAI SERVICE PVT. LTD. (1901-19-07), 4/A/1A, 1/3 A, SALUNKE VIHAR ROAD, BORADE NAGAR, KONDWA, PUNE, MAHARASHTRA. - 411048
PH :020-71727001/2/3/4/5/6/7.
1086. MAHALAXMI AUTOMOTIVES PVT. LTD. (1912-19-04), NO.485/1, CTS NO.1041, OM SUPER MARKET, GHOKALE CROSS ROAD, MODEL COLONY, SHIVAJI NAGAR, PUNE - 411016
PH :020-67290018/17.

1087. CHOWGULE INDUSTRIES PVT. LTD.
(1908-19-05), 129/2/B/1, NEW PUNE MUMBAI HIGHWAY, KATRAJ DEHU ROAD BYPASS, TATHWADE, TAL-MULASHI, DISTT. PUNE (MAHARASHTRA) - 411033
PH :020-67915700.

1088. SAI SERVICE PVT. LTD. (1901-19-08), SURVEY NO. 37, HISSA NO. 2, SITUATED AT WADGAON KHURD, NEAR NANDED CITY, SINHAGAD ROAD, TALUKA - HAVELI, DISTRICT - PUNE, MAHARASHTRA.
PH :020-24391399.

1089. THE KOTHARI WHEELS (1906-19-05), PLOT NO. 24/B, HADAPSAR INDUSTRIAL ESTATE, PUNE. - 411028
PH :020-26871020, 8411002011.

1090. CHOWGULE INDUSTRIES PVT. LTD.
(1908-19-06), SR. NO.- 43/44/S, 7 PARVATI INDUSTRIAL ESTATE, OPP. ADINATH SOCIETY, PUNE- SATARA ROAD, PUNE. - 411009
PH :020-67273200.

1091. MOTO DRIVE PVT. LTD. (1916-19-01), 1337/1, REALITY BUILDING, WAGHOLI, PUNE NAGAR ROAD, PUNE. - 412207
PH :9130049309.

1092. MOTO DRIVE PVT. LTD. (1916-19-02), GAT NO.1346/1, UBBALENAGAR, WAGHOLI, PUNE NAGAR ROAD, PUNE. - 412207
PH :9130049309.

1093. EXCELL AUTOVISTA PVT. LTD. (1917-19-01), GATE NO.1232, 10TH MALL, PUNE SASWAD ROAD, VILLAGE – WADKI, TAL – HAVELI, DIST PUNE. - 412308
PH :9320357300.

1094. THE KOTHARI WHEELS (1906-19-06), SURVEY NO.46, HISSA 9/1 (CITY SURVEY NO.6181+6180), WADGAON SHERI, CHANDAN NAGAR, PUNE NAGAR ROAD, TAL-HAVELI, PUNE. - 411014
PH :020-27030400/444.

1095. ACE KUDALE CAR PVT. LTD. (1910-19-03), SURVEY NO. 272, 1/4, NEAR MOSHI TOLL PLAZA, MOSHI GAON, TALUKA – HAVELI, DISTRICT – PUNE. - 412105
PH :020-9423123665.

RAHATA (SHIRDI)

1096. KANKARIYA AUTOMOBILES PVT LTD
(ZV03-ZV-01), SHIRDI ROAD, SAKORI, RAHATA, - 423107
PH :2423-243541.

RAJAPUR

1097. JAGRUT MOTORS P. LTD. (AHA1-AHA-01), SURVEY NO. 14/8, TARALWADI, RAJAPUR, DIST: RATNAGIRI - 416702
PH :02355-252238.

RATNAGIRI

1098. JAGRUT MOTORS P. LTD. (G301-G3-01), D-25,,MIDC MIRJOLE,MAHARASTRA,RATNAGIRI - 415639
PH :02352-228380, 28380.

SANGAMNER

1099. SHAAN CARS PRIVATE LIMITED (HE03-HE-01), GAT NO. 173/4/5/6, A/P VELHALE, NASHIK PUNE HIGHWAY, SANGAMNER , DIST AHMEDNAGAR, MAHARASHTRA - 422605
PH :8888846450.

SANGLI

1100. CHOWGULE INDUSTRIES PVT. LTD.
(J102-J1-01), GAT NO.243 SANGLI KOLHAPUR ROAD, OPP. TO GAJANAN MAHARAJ MANDIR, ANKALI, TAL-SANGLI, DISTT. SANGLI - 416416
PH :0233-6631300.

SASWAD

1101. CHOWGULE INDUSTRIES PVT. LTD.
(1908-PH-03), SOLAPUR HIGHWAY, SASWAD, DIST. PUNE - 412301
PH :02115-224450; 225210.

SATARA

1102. CHOWGULE INDUSTRIES PVT. LTD.
(F303-F3-01), PLOT NO. B-2,OLD MIDC,SATARA - 415002
PH :02162-245941/2/3.

SAWANTWADI

1103. JAGRUT MOTORS PVT. LTD. (BBL1-BBL-01), SHIVSHAMBHO APARTMENT, 1190, A/P KOLGAON, SURVEY NO.187, HISSA NO.33B, TAL-SAWANTWADI, DISTT. SINDHUDURG. - 416510
PH :9765000872, 9823564372.

SHAHAPUR

1104. SHIVAM AUTO ZONE (I) PVT. LTD.
(BZU1-BZU-01), DR. DESHPANDE COMPOUND, NEAR BHATSA COLONY, VILLAGE – GOTHEGHAR, TALUKA – SHAHPUR, DISTRICT – THANE, MAHARASHTRA - 421601
PH :8082111222.

SHIRUR

1105. MAHALAXMI AUTOMOTIVES PVT. LTD.
(1912-ZD-02), 1023/1, NEXT INDIAN OIL PETROL PUMP, SARADWADI, PUNE-AHMEDNAGAR HIGHWAY, TAL: SJIRUR, DIST: PUNE, MAHARASHTRA - 412210
PH :02138-615000.

SHIRWAL

1106. CHOWGULE INDUSTRIES PVT. LTD.
(BSD1-BSD-01), GAT NO.175, A/P SHINDEWADI, SHIRWAL-BHOR ROAD, SHIRWAL, TAL KHANDALA, DISTT. SATARA - 412801
PH :02169-244044.

SHRIRAMPUR

1107. KANKARIYA AUTOMOBILES PVT LTD
(LV03-LV-01), S.NO.139/1/3, NEAR NAKA NO.4, SANGAMNER ROAD, SHRIRAMPUR DISTT. AHMEDNAGAR - 413709
PH :02422-210264.

SILLOD

1108. PAGARIYA AUTO PVT. LTD. (2103-ZG-04), PLOT NO. 19/20, SURVEY NO. 386, AURANGABAD NAKA, SILLOD, AURANGABAD - 431112
PH :9860999468.

SINNAR

1109. SHAAN CARS PRIVATE LIMITED (3703-FU-03), A-24, MIDC AREA MALEGAON,SINNAR TAL-SINNAR,, - 422103
PH :02551-230300.

SOLAPUR

1110. CHAVAN AUTOMOBILES(CHAVAN MOTORS DIVISION INDIA P) (B102-B1-02), 150, AKALKOT ROAD,OPP. SVCS HIGH SCHOOL,SOLAPUR, - 413006
PH :217-2606666.

1111. CHAVAN AUTOMOBILES(CHAVAN MOTORS DIVISION INDIA P) (B102-B1-01), 18,39, INDUSTRIAL ESTATE,HOTAGI ROAD,SOLAPUR, - 413224
PH :0217-2378888, 2373999.

TALASARI

1112. SHIVAM AUTOZONE (BIN1-BIN-01), SURVEY NO. 191/1 PLOT NO. 5, AT-POST – VADAVALI, NH-8, TALASARI, THANE, MAHARASHTRA - 401606
PH :02521-220777.

THANE

1113. THANAWALA MOTOR AGENCY (P) LTD
(3981-39-01), B-31, OPPOSITE ITI,WAGLE ESTATE MAIN ROAD,WAGLE ESTATE,THANE
PH :022-25872222.

1114. FORT POINT (3906-39-01), KOTHARI WAREHOUSE NO. 111,POKHRAN ROAD NO. 11,MANPADA, CHATALSAR,THANE - 400607
PH :022-41157777, 41515300,25897170.

1115. NAVNIT MOTORS LTD (3908-39-02), B R T PLOT ,THANE (W) ,MAHARASHTRA - 400607
PH :022-66066666.

1116. SPECTRA MOTORS LIMITED (0508-39-04), B-74,ROAD NO. 33,NEAR ESI HOSPITAL,WAGLE ESTATE, THANE - 400604
PH :8.8796660053E+017.

1117. SPECTRA MOTORS LIMITED (0508-39-06), C/O MONARCH PLASTICS, GALA NO.4, MIRA CO-OP. INDUSTRIAL ESTATE, KASHIMIRA, THANE - 401104
PH :022-28542185.

1118. PARAMOUNT WHEELS PVT. LTD. (3911-39-01), OPP. PREMA LAXMAN SCHOLL. PANKERPADA, MIRAROAD(E), DIST: THANE - 401107
PH :022- 42933944/45/51/52/53.

TITWALA

1119. PRAKASH AUTO PVT. LTD. (BYP1-BYP-01), SHOP NO. 1, SURVEY NO. 23/2, GOVELI – TITWALA ROAD, VILLAGE – GHOTSAI, TITWALA, TALUKA – KALYAN, DISTRICT – THANE, MAHARASHTRA . - 421605
PH :0251-3240040 ,9960023999.

ULHASNAGAR

1120. PRAKASH AUTO PVT. LTD. (3903-39-01), U NO-3,SHEET NO. 30,VITHALWADI STATION ROAD, ULHASNAGAR - 421003
PH :0251-3228525/3257934,2561582.

VADUJ

1121. CHOWGULE INDUSTRIES PVT. LTD.
(F303-GQ-03), KALEVASTI, VADUJ DAHIWADI ROAD , VADUJ - 415506
PH :02161-232323/232030.

VASAI

1122. SAI SERVICE PVT. LTD. (0504-V9-03), C/O PRASHANTI INVESTMENT LTD.,NEAR GAODEVI TEMPLE, VILLAGE SATIVILI,DISTT. THANE - 401208
PH :0250-9552590086 /87 / 0250-2480583/2481474,912455685, 453583.

1123. SAI SERVICE PVT. LTD. (V901-V9-01), ANDRADESH BHAVAN, SURVEY #27 A,NEAR UMELA PHATAK, VASAI (WEST), DIST. THANE, MAHARASTRA - 401202
PH :88050229862 / 9552527214,.

VIRAR

1124. SAI SERVICE PVT. LTD. (V901-PG-02), VILLAGE-VATAR, VIRAR(W)-TAL- VASAI, DISTRICT-THANE, MAHARASHTRA - 401301
PH :8605000906 / 0250-2584105 / 2584015.

VITA

1125. CHOWGULE INDUSTRIES PVT. LTD.
(BSE1-BSE-01), S NO. 900, HISSA NO. 1,2,3/1/2, SANGLI VITA ROAD, VITA, TALUKA – KHANAPUR, DISTRICT – SANGLI, MAHARASHTRA - 415311

WADA

1126. PARAMOUNT WHEELS PVT. LTD.
(BXD1-BXD-01), SURVEY NO.133/7/1, WADA BHIWANDI ROAD, VILLAGE GANDARE, POST KONE, TALUKA WADA, DISTT. PALGHAR (MAHARASHTRA) - 421303
PH :02526- 8411933992.

WAGHOLI

1127. SAI SERVICE PVT. LTD. (1901-AB-04), GAT NO 2406/1440, VILLAGE- WAGHOLI,TAL- HAVELI, DIST- PUNE - 412207
PH :020-46403333/31/32.

WAI

1128. CHOWGULE INDUSTRIES PVT. LTD. (BYC1-BYC-01), GAT NO. 407, A/P SHENDURJANE, MIDC ROAD, NEAR HOTEL GANDHARVA, OPP. DHOM LEFT CANAL, TAL – WAI, DISTT. SATARA - 412803
PH :8805095200, 880519820, 9922992887.

WANI

1129. HIMALAYA CARS (4M01-0I-02), YASH LAWNS, COLLEGE/NAGPUR ROAD, TALUKA:WANI, DISTRICT-YAVATMAL, MAHARASHTRA - 445304
PH :07239-228888.

WARDHA

1130. SEVA AUTOMOTIVE LTD. (2002-AC-02), GOPURI CHOWK, ,OPP. BANK OF INDIA COLONY, NAGPUR ROAD, WARDHA - 442001
PH :07152-253545/253525.

WARUD

1131. ASPA BANDSONS AUTO (P) LTD (F201-UG-04), SURVEY NO. 50/3, SETURJANAGHAT ROAD, TALUKA: WARUD, DIST. AMRAWATI - 444906
PH :07229-232888.

WASHIM

1132. ASPA BANDSONS AUTO (P) LTD (F201-9D-02), NEAR RAILWAY CROSSING,HIGOLI ROAD,WASHIM, - 444505
PH :07252-233999.

YAVATMAL

1133. HIMALAYA CARS (4M01-4M-01), OPPOSITE RAUT PETROL PUMP, DARWHA ROAD, YAVATMAL, MAHARASHTRA - 445001
PH :07232-249992.

YEOLA

1134. SEVA AUTOMOTIVES PVT LTD (BST1-BST-01), GAT NO. 65-A, PLOT NO. 41, AHMED NAGAR-MANMAD ROAD, NEAR TEHSIL OFFICE, YEOLA, TALUKA – YEOLA, DISTRICT – NASHIK, MAHARASHTARA. - 423401
PH :0259-266166.

YEWAT

1135. MAHALAXMI AUTOMOTIVES PVT. LTD. (AZA1-AZA-01), SOLAPUR PUNE NATIONAL HIGHWAY, SAHAJAPUR, YEWAT, TALUKA: DAUND, DISTT: PUNE (MAHARASHTRA). - 412202
PH :9881254892.

THANE

1136. PARAMOUNT WHEELS PVT. LTD. (3911-39-03), B-2, MIDC, MIRA ROAD, OFF NH-8, THANE. - 401107
PH :022-9004999360.

MANIPUR

CHURACHANDPUR

1137. EASTERN MOTORS (BBE1-BBE-01), HMUIA VENG,TEDDIM ROAD, CHURACHANDPUR, MANIPUR - 795128
PH :03874235969, 9862555472.

IMPHAL

1138. EASTERN MOTORS (7401-74-01), CHINGMEIRONG EAST, IMPHAL, MANIPUR
PH :0385-330856, 226816/2056962.

1139. EASTERN MOTORS (7401-74-02), NH,39, CHINGMEIRONG, WEST, IMPHAL. - 795010
PH :0385-2422152.

THOUBAL

1140. EASTERN MOTORS (BJL1-BJL-01), THOUBAL ATHOKPAM KHUNOU, NEAR D.C. OFFICE COMPLEX, THOUBAL, MANIPUR - 795138
PH :3848-9862662225.

MEGHALAYA

JOWAI

1141. RANI MOTORS (3I01-3I-01), LADTHADLABHO, OPP. PWD OFFICE, JOWAI, DIST - JAINTIA HILLS, MEGHALAYA - 793150
PH :03652-204025.

KHLIEHRIAT

1142. BANALARI WORLD CARS (8502-PZ-03), JOWAI-SICHAR ROAD, MEGHALAYA, KHLIEHRIAT - 793150
PH :3655-9856299493.

MAWNGAP

1143. BANALARI WORLD CARS (CBK1-CBK-01), LAITPYNTER, SHILLONG NONGTION ROAD, MAWNGAP, DIST.-EAST KHASI HILLS, MEGHALAYA. - 793121
PH :9774537902, 9615101743.

NONGPOH

1144. RANI MOTORS (8501-TN-05), NEAR D.T.O. OFFICE, G.S. ROAD, NONGHPOH, RIBHOI DISTT. - 793102
PH :03662-977401910/9774012380.

NONGSTOIN

1145. RANI MOTORS (8501-0P-04), OPP.IRANI PETROL PUMP, NEW NONGSTEIN, DISTRICT-WEST KHASI HILLS ,MEGHALAYA - 793119
PH :9863022955.

SHILLONG

1146. BANALARI WORLD CARS (8502-85-01), MAWLAI NONGKWAR, G.S. ROAD, SHILLONG - 793017
PH :364-09436111128/2575045.

1147. RANI MOTORS (8501-85-01), SUNNY HILLS, GARIKHANA, G.S.ROAD, SHILLONG - 793014
PH :0364-241581.

1148. RANI MOTORS (8501-85-02), MAWBLEI, NH-44, SHILLONG JOWAI ROAD, MEGHALAYA. - 793021
PH :364-2535189, 2231287.

NAGALAND

DIMAPUR

1149. PROGRESSIVE MOTORS (3201-32-01), OPPOSITE AIRPORT, N.H.39, DIMAPUR KOHIMA ROAD, DIMAPUR - 797112
PH :03862-30987, 30992.

KOHIMA

1150. PROGRESSIVE MOTORS (3201-4N-02), NH-39, NEAR INDIAN OIL PETROL PUMP, KOHIMA, - 797001
PH :03862-230987.

ORISSA

BERHAMPUR

1151. SKY AUTOMOBILES (E203-E2-02), PLOT NO. 876, WESTERN ROW NH-5, KONISI HATO, VILLAGE – KONISI, BERHAMPORE, GANJAM, ODISHA. - 761008
PH :7381266000.

BHUBANESHWAR

1152. JYOTE MOTORS (0402-04-04), PLOT NO. 22 & 23, SECTOR-A, ZONE-D, MANCHESWAR INDUSTRIAL ESTATE AREA, BHUBANESHWAR. - 751010
PH :7064499362.

CHANDIKHOLE

1153. SKY AUTOMOBILES (BXL1-BXL-01), PLOT NO.285/3, SHANTI MANDAP MOUZA -SUNGUDA, TEHSIL-DARPANI, PO CHANDIKHOL, DIST. -JAJPUR, ODISHA, - 755044
PH :9583000001.

JALESWAR

1154. JYOTE MOTORS PVT. LTD. (BXP1-BXP-01), KHATA NO. 422/744, PLOT NO. 2304 AT P.O. - NAYABAZAR, JALESWAR, DIST.- BALASORE, ODISHA. - 756032
PH :8599019867.

NIMAPARA

1155. NARAYANI MOTORS PVT. LTD. (CFL1-CFL-01), PLOT NO. 345/1344, GANESH BAZAR, NIMAPARA, DISTRICT – PURI, ODISHA. - 752106
PH :9583001877.

SUBARNAPUR

1156. ODYSSEY MOTORS PVT. LTD. (BUK1-BUK-01), KHATA NO. 32, MOUZA – SANJHINIK, SONEPUR (ALSO KNOWN AS SUBARNAPUR), DISTRICT – SUBARNPUR, ODISHA - 767017
PH :9439314464.

ANGUL

1157. ODYSSEY MOTORS PVT. LTD. (W101-W1-01), AT/PO KULAD (NEAR NALCO CPP PLANT), KANDASAR, NALCO NAGAR, ANGUL (DISTT: ANGUL). - 759145
PH :06764-221079, 221669.

BALASORE

1158. JYOTE MOTORS PVT LTD (L501-L5-01), PLOT NO. 276, GANESHWARPUR-NH-5, POST-JANUGANJ VIA REMUNA, DIST. -BALASORE - 756019
PH :6782-2302200.

BARGARH

1159. ODYSSEY MOTORS (P) LTD (D401-SJ-04), AT/PO -BARGARH, NH-6, DISTT.-BARGARH, ORISSA - 768028
PH :06646 -246533.

BARIPADA

1160. JYOTE MOTORS PVT LTD (L501-RQ-02), PLOT NO. 90/523/904, SWARUP VILLA, NH-5, BARIPADA - 757001
PH :6792-211200.

BERHAMPUR

1161. SKY AUTOMOBILES (E203-E2-01), PLOT NO.80/1191 DHARMA NAGAR, MAIN ROAD, BERHAMPUR - 760002
PH :7381266000.

BHADRAK

1162. JYOTE MOTORS PVT LTD. (IZ01-IZ-01), PLOT NO. 14/4837, KHATA NO. 1345/1087, TRISHALPUR, CHARMPA, BHADRAK , ODISHA - 756101
PH :9776615001.

BHAVANIPATNA

1163. LEGEND CARS PVT. LTD. (SW01-TB-02), NH-201, KESINGA ROAD, BHAWANIPATNA - 766001
PH :06670 -233345.

BHUBANESWAR

1164. JYOTE MOTORS PVT LTD (0402-04-01), A-62, NAYAPALLI,NEAR CRPF SQUARE, BHUBANESWAR - 751003
PH :0674-2436829.

1165. NARAYANI MOTORS PVT LTD (0403-04-01), 217, CUTTACK ROAD, JHARPARA, BHUBANESWAR - 751006
PH :0674-572872, 873.

1166. SKY AUTOMOBILES (0404-04-01), PLOT NO. -435/1866, NEAR KIIT SQUARE PATIA, BHUBNESHWAR, - 751022
PH :674-2725912/2725992.

1167. NARAYANI MOTORS PVT LTD (0403-04-02), PLOT NO 56 AND 57,RASULGARH, BHUBANESHWAR, ODISHA - 751010
PH :0674-2588476.

BOLANGIR

1168. ODYSSEY MOTORS (P) LTD (D401-MW-03), NH-201, MADHIAPALI, SAMBHALPUR ROAD, BOLANGIR, ORISSA - 767001
PH :6652-230031.

CUTTACK

1169. SKY AUTOMOBILES (6701-67-02), BHANPUR, NH-5, CUTTACK - 753011
PH :0671-2686527.

DHENKENAL

1170. SKY AUTOMOBILES (6701-4P-04), PLOT NO-136/1103, KATHAGARA , NEARASSAM OIL, NH-42, DHENKANAL. - 759001
PH :06762-243048-49.

JAJPUR

1171. SKY AUTOMOBILES (6701-RZ-05), P.O JAHNA, P.S KORAI, KEONJHAR ROAD, JAJPUR, ORRISSA - 7553019
PH :06726-9583104012.

JEYPORE

1172. LEGEND CARS PVT. LTD. (SW01-SW-03), SOURAGUDA,JEYPORE,DISTT-KORAPUT,ORISSA,INDIA - 764001
PH :06854 -230624.

JHARSUGUDA

1173. ODYSSEY MOTORS PVT LTD (BJU1-BJU-01), KHATA NO. 466/502, PLOT NO. 966, JHARSUGUDA TOWN, UNIT NO. 7, SARBAHAL P.S. JHARSUGUDA, ORISSA - 768201
PH :0663-4030011, 4075000.

KEONJHAR

1174. KUMAR AUTOMOBILES (7U81-7U-01), DHRUPADA, KEONJHAR, ORISSA
PH :06766-256466.

1175. JYOTE MOTORS PVT. LTD. (7U01-7U-01), NH 215, DHRUPADA, BARBIL ROAD, KEONJHAR. - 758001
PH :9776615001.

NAYAGARH

1176. JYOTE MOTORS PVT LTD (0402-DC-02), PLOT NO. 1319/3750, KHANDAPADA, NAYAGARH - 752069
PH :06753-225394.

PARADEEP

1177. NARAYANI MOTORS PVT LTD (OE01-OE-01), PLOT NO. 1438, UDAYA VIHAR, NEAR DO CHOWKI SQUARE, PARADEEP, ODISHA. - 754141
PH :9583022020.

PURI

1178. NARAYANI MOTORS (4Q01-4Q-01), PLOT NO.1797/2449, KHATA NO.187A/32, AT. BATAMANGLA,PO HAREKRISHNAPUR, BATAGAON, PURI, ODHISA - 752002
PH :06752-231323.

ROURKELA

1179. ORBIT MOTORS (8701-87-01), VEDVYAS, NEAR PAAHADI BAR, ROURKELA,ORRISA - 769041
PH :0661-2660777.

SAMBALPUR

1180. ODYSSEY MOTORS (P) LTD (D401-D4-01), AINTHAPALI, SAMBALPUR, ORISSA - 768004
PH :0663-522102 - 03 -04-05.

PONDICHERRY

PONDICHERRY

1181. SHENBAKA CARS PRIVATE LIMITED (9601-96-01), 133/1A, MOOLAKULAM, VILLUPURAM MAIN ROAD, PONDICHERRY - 605010
PH :0413-2293391/92/93.

PUNJAB

ABOHAR

1182. TARA AUTOMOBILES (H501-H5-01), SHREE GURU JAMBHESHWAR CHOWK, MALOUT SHREE GANGA NAGAR BYPASS, ABOHAR, PUNJAB - 152116
PH :01634-28313-14.

AJNALA

1183. SWANI MOTORS PVT. LTD. (CBP1-CBP-01), KHASRA NO. 71, AJNALA-AMRITSAR ROAD, VILLAGE - BHARKA TARA SINGH, TEHSIL - AJNALA, DISTRICT - AMRITSAR, PUNJAB. - 143102
PH :1858-220401.

AMRITSAR

1184. JAYCEE MOTORS (1702-17-01), 274 EAST MOHAN NAGAR, G.T.ROAD, AMRITSAR - 143006
PH :0183-581334, 581335.

1185. RISHABH FOURWHEELS PVT. LTD. (1703-17-01), ADARSH SOAP COMPLEX, BATALA ROAD, AMRITSAR - 143004
PH :0183-2263369.

1186. SWANI MOTORS LTD. (1701-17-01), 81,COURT ROAD, AMRITSAR - 143001
PH :0183-400404,.

ANANADPUR SAHIB

1187. C M AUTOSALES (OF01-OF-01), VILLAGE MIYANPUR, NAINA DEVI ROAD, ANANDPUR SAHIB,TEHSIL ANANDPUR SAHIB, DISTT. ROPAR,PUNJAB - 140123
PH :01887-9592916811.

BALACHAUR

1188. LOVELY AUTOS (XV01-XV-01), NEAR MCDONALD – GHUGGI JUNCTION), VPO-GARHI KANUGO, NAWANSHAHR CHANDIGARH HIGHWAY, CHANDIGARH ROAD, BALACHAUR, DISTRICT-S.B.S NAGAR, PUNJAB (NAWANSHAHR) - 144521
PH :9878427910.

BANGA

1189. LOVELY AUTOS (3503-MS-03), NAWASEHAR-JALANDHAR ROAD, BANGA - 144505
PH :01823-7355560557.

BANUR

1190. TRICITY AUTOS PVT. LTD. (BRT1-BRT-01), SANDHU MARKET NEAR SALES TAX BARRIER, BANUR RAJPURA HIGHWAY, BANUR, PUNJAB - 140601
PH :01762-660880.

BARNALA

1191. MAX AUTOS (4S01-4S-01), NR. HANDIYAN CHOWK,MANSA BYE PASS,BARNALA,PUNJAB - 151001
PH :01679-285022, 9216529220.

BATALA

1192. CITI AUTOMOBILES (V581-V5-01), NEAR GURUDWARA ACHAL SAHIB, PATHANKOT JALANDHAR ROAD, BATALA,
PH :01871-98724024253.

1193. PATHANKOT VEHICLEADES PVT. LTD. (A701-V5-05), NEAR VMS INSTITUTE, SAID MUBARAK, GT ROAD, BATALA - 143505
PH :01871-246246, 246245.

BHADSON

1194. HIRA AUTOMOBILES (BAG1-BAG-01), VILLAGE CHASWAL, NABHA ROAD, BHADSON - 147202
PH :8872034034, 9217048236.

BHATINDA

1195. TARA AUTOMOBILES (7002-70-01), MANSA ROAD, OPP. I.T.I, BATHINDA - 151001
PH :0164-2235349, 50.

BHOGPUR

1196. LOVELY AUTOS PVT. LTD. (BRU1-BRU-01), KHASRA NO. 31/114, 17/2 18/2 23, MAIN JALANDHAR-PATHANKOT HIGHWAY,OPP- AJIT PALACE, BHOGPUR - 144201
PH :9872030006.

CHUNNI KALAN

1197. HOSHIARPUR AUTOMOBILES (CFG1-CFG-01), NEAR RAJINDER MOTORS, SIRHIND-CHANDIGARH ROAD, VILLAGE CHUNNI, DIST. FATEHGARH SAHIB. - 140307
PH :1763-248005, 9815131766.

DASUYA

1198. HOSHIARPUR AUTOMOBILES (H402-8D-04), OPP CHEEMA PETROL PUMP, G.T. ROAD, DASUYA - 144205
PH :01883-238892.

DERABASSI

1199. AUTOPACE NETWORK (P) LTD (0705-AW-02), AT NH-2, NEAR DERABASSI, TOLL BARRIER-DERABASSI - 140507
PH :01762-9815011669.

DEVIGARH

1200. HIRA AUTOMOBILES (OG01-OG-01), CHANNA MOUR, PEHOWA PATIALA ROAD, DEVIGARH, DISTT. PATIALA (PUNJAB). - 147111
PH :0175-2631152.

FARIDKOT

1201. MAPSKO AUTO INDIA PVT. LTD. (4U02-4U-01), FARIDKOT- KOTKAPURA ROAD, FARIDKOT, PUNJAB - 151204
PH :01639- 253001.

FAZILKA

1202. TARA AUTOMOBILES (H501-4V-03), NH-10, NEAR SARVHITKARI BAL VIDYA MANDIR, FAZILKA - 152116
PH :01638-260213.

FEROZEPUR

1203. BABA AUTOS (7C01-7C-01), MOGA ROAD, FEROZEPUR CANTT - 152002
PH :01632-8872013211.

GARHSHANKAR

1204. HOSHIARPUR AUTOMOBILES (H402-V4-02), OPP. COURT, CHANDIGARH ROAD, GARHSHANKAR, DIST. HOSHIARPUR - 144527
PH :01884-283151.

GIDDARBAHA

1205. HIRA AUTOMOBILES (AUA1-AUA-01), NEAR BHARU CHOWK, BATHINDA-MALOUT ROAD, GIDDERBAHA, DISTT. SRI MUKTSAR SAHIB (PUNJAB) - 152101
PH :01637-231510.

GORAYA

1206. LOVELY AUTOS (BJR1-BJR-01), NEAR MILAN PALACE, G.T. ROAD, GORAYA. - 144409
PH :01826-261001.

GURDASPUR

1207. PATHANKOT VEHICLEADES PVT. LTD.
(A701-4X-03), V.P.O. BABRI NH-15, DIST. GURDASPUR - 143521
PH :01874-247245, 247246.

1208. PATHANKOT VEHICLEADES (A701-4X-06), VPO - JEEWANWAL BABRI, NH-15, GURDASPUR (PUNJAB) - 143521
PH :01874-247244.

HOSHIARPUR

1209. HOSHIARPUR AUTOMOBILES (H402-H4-01), SINGRIWALA, JALLANDHAR ROAD, HOSHIARPUR, - 146001
PH :01882-251674, 250656, 309212.

JAGRAON

1210. SANDHU AUTOMOBILES (6206-LT-05), NATIONAL HIGHWAY-64, JAGRAON - 142026
PH :01624-258558 ,9876727296.

JAITU

1211. MAPSKO AUTO INDIA PVT. LTD. (YX02-YX-01), NEAR CANAL, BATHINDA ROAD, JAITO, DISTRICT – FARIDKOT. - 151202
PH :7347000520.

JALALABAD

1212. TARA AUTOMOBILES (H501-8E-02), F.F. ROAD, NEAR THANA SADAR, JALALABAD - 152024
PH :01638-252913.

JALANDHAR

1213. LOVELY AUTOS (3503-35-01), DR. AMBEDKAR CHOWK, JALANDHAR CITY - 144001
PH :0181-237001, 02.

1214. STAN AUTOS PVT LTD (3504-35-01), OPP DPS SCHOOL, G.T. ROAD, JALANDHAR - 144010
PH :0181-3952521.

JANDIALA MANJKI

1215. LOVELY AUTO (BJS1-BJS-01), SANT MARKET, JANDIALA-BUNDALA ROAD, VILLAGE – JANDIALA MANJKI, TEHSIL – NOORMAHAL, DISTRICT – JALANDHAR, PUNJAB. - 144033
PH :7087439797.

JANDIALAGURU

1216. BABA AUTOS (7C01-GL-03), GT ROAD, NEAR TARN TARAN BYE PASS, JANDIALA GURU - 143115
PH :0183-8872013029.

KAPURTHALA

1217. STAN AUTOS PVT LTD (3504-4Z-03), SIDHU COMPLEX, CIRCLE ROAD - KAPURTHALA, PUNJAB - 144602
PH :01822-8872000288
8872006618, 9779623949.

KHANNA

1218. SANDHU AUTOMOBILES PVT. LTD. (N301-N3-01), VILLAGE-KAUNI, NEAR GILL PETROL PUMP, GT ROAD, KHANNA, DIST. -LUDHIANA, PUNJAB. - 141401
PH :1858-220401.

KHARAR

1219. CM AUTOSALES PVT. LTD. (7K01-JH-03), NH-95, MORINDA ROAD,KHANPUR, KHARAR. DIST. MOHALI - 140301
PH :0160-9915022878.

LUDHIANA

1220. GULZAR MOTORS LTD. (6204-62-01), G.T.ROAD, DHOLEWAL, OPP. MILITARY CARMP, LUDHIANA - 141003
PH :0161-534953, 534952, 543704, 5.

1221. LIBRA AUTO CAR CO. LTD (6207-62-01), G.T. ROAD, NEAR AIRPORT, LUDHIANA - 141020
PH :0161-2512701, 03.

1222. LIBRA AUTO CAR CO. LTD (6207-62-02), G.T ROAD, NEAR AIRPORT, LUDHIANA. - 141020
PH :0161-2512701 , 03.

1223. SANDHU AUTOMOBILES (6206-62-01), DHOLEWAL CHOWK, LINK ROAD, LUDHIANA - 141203
PH :0161-2534514, 2535107.

1224. STAN AUTOS PVT LTD (6203-62-01), G.T.ROAD, NEAR SHERPUR CHOWK, LUDHIANA - 141003
PH :0161-542300, 545800.

1225. STAN AUTOS PVT LTD (6203-62-04), HAMBRAN ROAD, LUDHIANA - 141001
PH :0161-2304487.

1226. SWANI MOTORS SERVICES PVT. LTD. (6208-62-01), 523, G.T.ROAD, NEAR DHANDHARI RLY STATION, LUDHIANA - 141010
PH :0161-2510583, 2510883.

1227. STAN AUTOS (6203-62-06), OPP. BHAI BALA GURUDWARA SAHIB OPP. PAKHOWAL ROAD, LUDHIANA - 141008
PH :0161-9257243406.

1228. SWANI MOTORS SERVICES PVT. LTD. (6208-62-02), GILL ROAD, NEAR CANAL BRIDGE, LUDHIANA - 141003
PH :0161-5092244.

1229. SWANI MOTORS SERVICES PVT. LTD. (6208-62-03), KHASRA NO. 114, 118, 119, 121/1/1, 121/2/1 OF VILLAGE-THREEKE, HADBAST NO. 156, AYALI CHOWK, FEROZEPUR ROAD, LUDHIANA, PUNJAB. - 141003
PH :0161-2802074, 7355825175.

1230. STAN AUTOS PVT. LTD. (6203-62-07), B-32/751 JALANDHAR BYE PASS CHOWK NEAR SABJI MANDI, LUDHIANA. - 141005
PH :8872640004.

1231. STAN AUTOS PVT LTD (6203-62-08), PLOT NO. 3, HB NO. 261, GIASPURA, GT ROAD (NEAR DHANDARI RAILWAY STATION), LUDHIANA, PUNJAB - 141014
PH :161-5043044,8872640004,.

MACHIWARA

1232. SANDHU AUTOMOBILES (6206-9T-03), SAMRALA ROAD, MACHIWARA, NEAR SHEEVA MARRIAGE PALACE - 141115
PH :01628-250577.

MAHILPUR

1233. HOSHIARPUR AUTOMOBILES (H402-DD-05), NEAR NEW BUS STAND, CHANDIGARH ROAD, MAHILPUR, DIST. HOSHIARPUR - 146105
PH :01884-246997, 9915157997.

MALERKOTLA

1234. MAX AUTOS (CCI1-CCI-01), MALERKOTLA-LUDHIANA MAIN ROAD, VILLAGE - BHOGIWAL, MALERKOTLA, DIST.-SANGRUR, PUNJAB. - 148023
PH :9814403131 , 9056903131.

MALOUT

1235. HIRA AUTOMOBILES LTD. (6302-LE-05), TINKONI CHOWK, NEAR LIC BUILDING, MALOUT - 152107
PH :01637-299524, 264724.

MANDI GOBINDGARH

1236. HOSHIARPUR AUTOMOBILES (U903-U9-01), PLOT GOYAL MOTORS, NEAR YES BANK, MANDI SIRHIND ROAD, NH-1, MANDIGOBINDGARH, PUNJAB. - 147301
PH :0176- 5523628, 9878432739.

MANSA

1237. TARA AUTOMOBILES (7002-TL-02), BALATA ROAD, NEAR ARVIND NAGAR, MANSA , PUNJAB - 151505
PH :01652-216042.

MOGA

1238. SM AUTO CARE CENTRE (H681-H6-01), OOP. ITI , G.T. ROAD, MOGA
PH :1636-226807.

1239. REMIRA MOTORS PVT. LTD. (H602-H6-01), INDUSTRIAL AREA, OPPOSITE ITI, GT ROAD, MOGA. - 142001
PH :7087025402.

MOHALI

1240. STAN AUTOS PVT LTD (L104-L1-01), PLOT NO.C-89, INDUSTRIAL AREA, PHASE-7, MOHALI - 160059
PH :0172-5020786, 5044849, 5020739.

1241. STAN AUTOS PVT LTD (L104-L1-02), PLOT NO.C-147, INDUSTRIAL AREA, PHASE-7, MOHALI - 160059
PH :0172-5020739.

1242. C M AUTOSALES PVT. LTD. (0706-L1-03), PLOT NO. B-64, INDUSTRIAL AREA PHASE-7, MOHALI – PUNJAB - 140110
PH :8284800597.

MUKERIAN

1243. HOSHIARPUR AUTOMOBILES (IP01-IP-01), VILL. TALWANDI KALAN, GT ROAD, MUKERIAN - 144211
PH :01883-217346.

MUKTSAR

1244. HIRA AUTOMOBILES LTD. (6302-J8-03), BHAI COMPLEX, MALOUT ROAD, MUKTSAR, PUNJAB - 152026
PH :64642.

MULLANPUR

1245. SANDHU AUTOMOBILES (YY01-YY-01), OPPOSITE DHAKA ROAD, FEROZEPUR ROAD, MULLANPUR - 141101
PH :8437025969.

NABHA

1246. HIRA AUTOMOBILES LTD. (6302-UF-06), RADHA SWAMI ROAD, NABHA - 147201
PH :01765-8437602800 ,9217048403.

NAKODAR

1247. LOVELY AUTOS (3503-5B-04), JALANDHAR ROAD, NEAR MALARI GATE, NAKODAR - 144040
PH :01821-7355554666, 9915028603.

NANGAL

1248. CM AUTOSALES PVT. LTD. (7K01-8F-02), PLOT#36,AJOLI MOR, FOCAL POINT INDUSTRIAL AREA, NAPA NANGAL ,PUNJAB - 140126
PH :1884-9915022897.

NAWANSHAHR

1249. LOVELY AUTOS (3503-J7-02), NAWANSHAHR CHANDIGARH ROAD, VILL- LANGROHA, DISTT:- NAWANSHAHR, PUNJAB - 144514
PH :01823-7355560006.

PATHANKOT

1250. PATHANKOT VEHICLEADES PVT. LTD. (A701-A7-01), NEAR MAMOON CHOWK, DALHOUSIE ROAD, PATHANKOT, - 145001
PH :0186-47273.

1251. PATHANKOT VEHICLEADES PVT. LTD. (A701-A7-04), NEAR A. B. COLLEGE, PATAHANKOT - 145001
PH :0186-2233701, 9417900828.

PATIALA

1252. HIRA AUTOMOBILES LTD. (6302-63-04), C-20 & C-45, FOCAL POINT, PATIALA, PUNJAB - 147001
PH :0175-2232377.

1253. HIRA AUTOMOBILES LTD. (6302-63-01), 13-B, FACTORY AREA, PATIALA - 147001
PH :0175-2360131, 2360132, 2360562.
1254. HIRA AUTOMOBILES (6302-63-07), D-1A, INDUSTRIAL FOCAL POINT, PATIALA (PUNJAB). - 147001
PH :0175-2232295, 2232296.
1255. ATELIER AUTOMOBILES PVT. LTD. (6303-63-01), VILLAGE MITHUMAJRA, RAJPURA-PATIALA ROAD, NEAR CASABA RESORT, PATIALA - 147001
PH :7527000106.

PATRAN

1256. HIRA AUTOMOBILES LTD. (6302-V3-02), NARWANA ROAD, PATRAN, PUNJAB, - 147105
PH :01764-244445, 245788.

PHAGWARA

1257. STAN AUTOS PVT LTD (3504-5C-02), PLOT NO-62, INDUSTRIAL AREA, NEAR JCT BRIDGE LUDHIANA - 141001
PH :01824-508067.

POHIR

1258. STAN AUTO (6203-XS-05), NEAR AHMEDGARH BYE PASS, POHIR, DISTRICT-LUDHIANA - 148101
PH :0161-2885500, 2885100.

RAIKOT

1259. SANDHU AUTOMOBILES PVT. LTD. (XT01-XT-01), BARNALA BY PASS ROAD, RAIKOT - 141109
PH :01624-8437700026.

RAJPURA

1260. HIRA AUTOMOBILES LTD. (HK01-HK-01), VILLAGE BADHAK, RAJPUR PATIALA ROAD, RAJPURA - 140401
PH :01762-244881-84.

RAMPURA PHUL

1261. TARA AUTOMOBILES (XR01-XR-01), RAMPURA -BARNALA ROAD, RAMPURA PHUL - 151103
PH :01651-266643.

ROPAR

1262. CM AUTOSALES PVT. LTD. (7K01-7K-01), CHANDIGARH ROPAR ROAD, ROPAR - 140001
PH :01881-9915022802.

SANGRUR

1263. MAX AUTOS (G401-G4-01), DHURI ROAD, SANGRUR, - 148024
PH :1672-39627.

SULTANPUR LODHI

1264. STAN AUTO (3504-ZY-04), NEAR TALWADI BRIDGE, TALWANDI ROAD, SULTANPUR LODHI, DISTRICT -KAPURTHALA - 144626
PH :01828-224222.

TALWANDI SABOO

1265. TARA AUTOMOBILES (ON01-ON-01), TALWANDI RAMA MAIN ROAD, NEAR VILLAGE-JAJJAL, RAMAMANDI,TALWANDI SABO, BHATINDA - 1551302
PH :9646691047, 8437008666.

TALWARA

1266. HOSHIARPUR AUTOMOBILES (H402-LR-07), DAM ROAD, NEAR KALI MATA MANDIR, VILLAGE-NAGAR, TALWARA, PUNJAB - 144216
PH :01883-238899, 295899, 9501084500.

TANDA

1267. HOSHIARPUR AUTOMOBILES (H402-DE-06), VILL.PULPUKHATA, MIANI ROAD, TANDA - 144203
PH :01886-294320.

TARN TARAN

1268. JAYCEE MOTORS (BLP1-BLP-01), VILLAGE – KAKKA, KANDIALA, NEAR SANDHU PETROL PUMP, AMRITSAR ROAD, TARAN TARAN, PUNJAB - 143401
PH :9780188456.

ZIRA

1269. BABA AUTOS (7C01-GK-02), FEROZEPUR ROAD, ZIRA - 142047
PH :1682-8437700230.

ZIRAKPUR

1270. TRICITY AUTOS (9M01-9M-01), PATIALA HIGHWAY,VILLAGE - NABHA, ZIRAKPIR, PUNJAB - 140603
PH :9878359054.

RAJASTHAN

ABU ROAD

1271. NAVNEET MOTORS (OQ01-OQ-01), PLOT NO. E-26, RIICO AMBAJI INDUSTRIAL AREA, PALANPUR HIGHWAY, ABU ROAD DISTT. SIROHI - 307026
PH :7665000995.

AJMER

1272. AJMER AUTO AGENCIES PVT. LTD. (B201-B2-01), SRINAGAR ROAD,AJMER (RAJASTHAN) - 305001
PH :0145-2426468.
1273. RELAN MOTORS (B203-B2-01), NEAR BIRLA WATER TANK, PARABATPURA BYEPASS, AJMER - 305001
PH :9251057111.
1274. RELAN MOTORS (B203-B2-02), F-243 RIICO INDUSTRIAL AREA, PALRA, AJMER - 305001
PH :9251019000.

ALWAR

1275. M.G. MOTORS (F901-F9-01), MUKESH GENERAL FINANCE COMPANY, ROAD NO. 2, NEAR MEO BOARDING, ALWAR - 301001
PH :0144-732236.

BAGRU

1276. PREM MOTORS PVT. LTD. (US02-US-01), JAIPUR-AJMER HIGHWAY, BAGRU, DISTRICT-JAIPUR - 303007
PH :141-2865921.

BALOTRA

1277. L.M.J.SERVICES LTD (6502-9G-05), JODHPUR BALOTRA ROAD,BALOTRA, RAJASTHAN - 344022
PH :02988-220958.

BANSWARA

1278. NAVNEET MOTORS (X903-X9-01), NEAR J.C. MILL,OPPOSITE AKASHWANI,DAHOD ROAD,BANSWARA - 327001
PH :02962-201123.

BARAN

1279. BHATIA & COMPANY (6101-PM-03), BESIDE OJHA METAL, ATRU ROAD, BARAN - 325205
PH :07453-230312.

BARMER

1280. L.M.J.SERVICES LTD (6502-SH-06), G-216, RIICO INDUSTRIAL AREA, BARMER - 344001
PH :2982-224641.

BASSI

1281. PREM MOTORS PVT. LTD. (VF02-VF-01), MOHAN PURA BASSI, JAIPUR, RAJASTHAN - 303301
PH :8058794085.

BEHROR

1282. M G MOTORS (FQ01-FQ-01), B-168, RIICO INDUSTRIAL AREA, PHASE-II, OPP. APEX TUBE, BEHROR, DISTT: ALWAR. - 301701
PH :8003165999.

BHARATPUR

1283. TM MOTORS PVT. LTD. (5J01-5J-01), BRIJ VIHAR COLONY,,MADARPUR ROAD,BHARATPUR,RAJASTHAN - 321001
PH :5644-226156.

BHILWARA

1284. CHAMPION CARS (E302-E3-01), CHITTORGARH ROAD, BHILWARA, RAJASTHAN, - 311001
PH :1482-513147.
1285. LOHIA AUTOMOBILES (E301-DELHI-01), AJMER ROAD,NEAR OCTROI POST,BHILWARA - 311001
PH :1482-28061, 36934, 51419.

BHIWADI

1286. FORTUNE CARS (9H01-9H-01), OPP. INDAG RUBBER,MAIN ROAD ,BHIWADI - 301019
PH :1493-645678.
1287. FORTUNE CARS (9H01-9H-02), F-458-C,RIICO,INDUSTRIAL AREA,BHIWADI - 301019
PH :1493-645682.

BIJOLIA

1288. LOHIA AUTOMOBILES (E301-UA-02), R/O GOLDEN CORRIDOR, OPP. ASHOK LEYLAND W/S, CHITTOR-BIJOLIA HIGHWAY, BIJOLIA, DIST. -BHILWARA - 311602
PH :9602515000.

BIKANER

1289. AUDI MOTORS LTD (7101-71-01), OPP. URMUL DAIRY PLANT,GANGANAGAR ROAD,BIKANER - 334004
PH :0151-522831, 61846.
1290. AUDI MOTORS LTD (7101-71-04), JAIPUR BYE PASS,BIKANER
, - 334004
PH :141-2793924-7.
1291. AUDI MOTORS LTD (7101-71-05), OPP. AVYYAPPA TEMPLE, K. K. COLONY, BIKANER - 334003
PH :151-2230384.

BUNDI

1292. BHATIA & COMPANY (6101-EF-02), 13-16B,INDUSTRIAL ESTATE,KOTA - 323301
PH :0747-2445457.

CHAKSU

1293. K.P. AUTOMOTIVES (P) LTD. (1104-JM-03), TONK ROAD, CHAKSU - 303901
PH :1429-243517.

CHIRAWA

1294. AUDI MOTORS LTD. (SY02-SY-01), NEAR PILANI CIRCLE, LOHARU ROAD, STATE HIGHWAY-8, CHIRAWA - 333026
PH :8696543583.

CHITTORGARH

1295. BHATIA & COMPANY (K901-K9-01), PLOT NO. 1001/1-1002/1,NIMBAHERA ROAD,CHITTORGARH - 312001
PH :1472-235299.

CHOMU

1296. SANGA AUTOMOBILES PVT. LTD. (HW01-HW-01), OPPOSITE POWER HOUSE, MORIJA ROAD, CHOMU - 303702
PH :01423-223102.

CHURU

1297. AUDI MOTORS PVT LTD (MD03-MD-01), NEAR DTO OFFICE, JAIPUR ROAD, CHURU - 331001
PH :8875009044.

DAUSA

1298. VIPUL MOTORS LTD. (1102-FM-03), AGRA JAIPUR ROAD, DAUSA - 303303
PH :1427-222158.

DEOLI

1299. K.P. AUTOMOTIVE (Z001-Z0-01), KOTA- JAIPUR HIGHWAY, NH-12, DEOLI - 304804
PH :9549651778.

DIDWANA

1300. SHRI MANGALAM AUTO PVT. LTD. (FT03-FT-01), KHASRA NO. 73, NEAR CHOTI DEVI SCHOOL, LADNU ROAD, DIDWANA , DISTRICT – NAGAUR. - 341303
PH :7231912912.

DUDU

1301. PREM MOTORS PVT. LTD. (BRY1-BRY-01), KHASRA NO.1107 & 1108, OPPOSITE POWER HOUSE SERVICE LANE, NH-8, DUDU. - 303008
PH :8058411181.

DUNGURPUR

1302. NAVNEET MOTORS (4902-GP-02), G-71, INDUSTRIAL AREA, DUNGARPUR - 314001
PH :2964-233788.

FATEHNAGAR

1303. TECHNOY MOTORS INDIA PVT. LTD. (4903-SV-03), UDAIPUR ROAD, OPP. HERO HONDA SHOWROMM, FATEHNAGAR, UDAIPUR - 313205
PH :2955-220304.

HANUMANGARH

1304. AUDI MOTORS LTD (7101-S7-03), JUNCTION TOWN ROAD,HANUMANGARH - 335512
PH :01552-231295.

HINDAUN

1305. FORTUNE CARS (A UNIT OF JYOTI AUTOMOBILES PVT LTD) (S002-S0-01), KHASRA NO. 737, VILLAGE – PATTI NARAINPUR, NEAR HANUMAN MANDIR, HINDAUN-MAHWA ROAD, HINDAUN. - 322230
PH :8875005912.

JAIPUR

1306. KATARIA AUTOMOBILES (1181-11-01), 1-A ; NARAYANPURI,KATARIA KRISHI FARM,SIRSI ROAD,JAIPUR - 302034
PH :141-2471740/2471014 /2471406.

1307. VIPUL MOTORS LTD. (1102-11-05), 29, INDUSTRIAL AREA, JHOTWARA, JAIPUR - 302012
PH :141-5194200.

1308. K.P. AUTOMOTIVES (P) LTD. (1104-11-01), E-198, SANGANER INDUSTRIAL AREA,MANSAROVAR,JAIPUR - 302020
PH :0141-445534, 35, 36, 442605.

1309. PREM MOTORS PVT. LTD. (1112-11-02), 12 13,SUDARSHANPURA INDUSTRIAL AREA, JAIPUR - 302006
PH :141-0141-2213065/2216229.

1310. SANGA AUTOMOBILES (1110-11-01), SECTOR 35, PRATAP NAGAR,SANGANER, JAIPUR - 302033
PH :141-4110200.

1311. SANGA AUTOMOBILES (1110-11-03), CHOKDI HAWALI SHAHAR, SHIRKI SHAHAR, NEAR IDGAH, BILOCHOYAN MOHALLA, DELHI ROAD, JAIPUR - 302002
PH :141-3050400.

1312. VIPUL MOTORS LTD. (1102-11-01), F-124A,MALVIYA INDUSTRIAL AREA,MALVIYA NAGAR,JAIPUR - 302017
PH :0141-523339, 520405.

1313. K.P. AUTOMOTIVES (P) LTD. (1104-11-06), GROUND FLOOR, ORBIT MALL, AJMER ROAD, JAIPUR, RAJASTHAN - 302006
PH :141-4079999.

1314. PREM MOTORS PVT. LTD. (1112-11-01), PLOT NO. E101/A, VKI , JAIPUR - 302039
PH :141-3055563.

1315. SATNAM MOTOCORP PVT. LTD. (1113-11-01), PLOT NO. E-524, SITAPURA INDUSTRIAL AREA, JAIPUR – 302 022, RAJASTHAN. - 302022
PH :0141-2771623.

1316. KTL PVT. LTD. (1114-11-01), PLOT NO. 13B, JHOTWARA INDUSTRIAL AREA, JAIPUR. - 302012
PH :0141-2345222.

JAISALMER

1317. LMJ SERVICES (5L01-5L-01), PLOT NO.36, 37, MAHESH REFUGEE COLONY,HDC SOCIETY, DABLA ROAD, JAISALMER (RAJASTHAN) - 345001
PH :9314223963.

JALORE

1318. SHRI KRISHNA AUTOSALES PVT. LTD. (VD01-VD-01), KHASRA NO.6809/2616, 2623, INDUSTRIAL AREA, JALORE-BHINMAL ROAD, JALORE - 343001
PH :9001893669.

JHALAWAR

1319. BHATIA & COMPANY (6102-RV-02), OPP. BALAJI KI CHHATRI , KHEL CIRCULAR STADIUM, BUS STAND ROAD, JHALAWAR - 326001
PH :07432-234009.

JHUNJHUNU

1320. AUDI MOTORS (FN03-FN-02), E1-2, AUTOMOBILES SERVICE SECTOR, RIICO INDUSTRIAL AREA, PHASE-2, SIKAR JAIPUR ROAD, JHUNJHUNU. - 333001
PH :01592-2250024.

JOBNER

1321. PREM MOTORS PVT. LTD. (BRD1-BRD-01), KHASRA NO. 758 & 754, BABER WALON KI DHANI, JOBNER, TEHSIL – PHULERA, DISTRICT – JAIPUR, RAJASTHAN - 303328
PH :8058794094.

JODHPUR

1322. L.M.J.SERVICES LTD (6502-65-01), PRATAP NAGAR,JODHPUR - 340002
PH :0291-28158, 33205.

1323. L.M.J.SERVICES LTD (6502-65-04), OPP TO RFC OFFICE,NEW POWER HOUSE ROAD,JODHPUR - 342003
PH :0291-2617772.

1324. SRI KRISHNA AUTOSALES PVT LTD (6503-65-01), 32-A,HEAVY INDUSTRIAL AREA,NR FCI GODOWNS, JODHPUR - 342005
PH :0291-2748405.

1325. L.M.J.SERVICES LTD (6502-65-09), B-8,9,10, MARUDHAR INDUSTRIAL AREA, PHASE 1, BASNI, JODHPUR - 342008
PH :8094011147.

1326. L.M.J.SERVICES LTD (6502-65-0C), 21/1, PAL MAIN BALOTRA ROAD, NEAR D.P.S. CIRCLE, JODHPUR - 342002
PH :293-2256177.

KEKRI

1327. AJMER AUTO AGENCIES PVT. LTD. (B201-GZ-03), KOTA SAWAR ROAD,KEKRI - 305404
PH :01467-222398.

KISHANGARH

1328. FORTUNE CARS (9H01-TU-03), KISHANGARH BIWADI HIGHWAY, NEAR KISHANGARH, DISTRICT ALWAR - 301405
PH :1460-243323.

KOTA

1329. BHATIA & COMPANY (6101-61-01), 13-16 B,INDUSTRIAL ESTATE, KOTA - 324007
PH :0744-451367, 22373, 26469.

1330. BHATIA & COMPANY (6102-61-01), AUTO MOBILE ZONE,G-11/12 INDUSTRIAL AREA, KOTA - 324005
PH :0744-2439006.

1331. BHATIA & COMPANY (6101-61-04), 3(K),CHAMBAL INDUSTRIAL AREA,KOTA,RAJASTHAN - 324007
PH :9413350336.

1332. BHATIA & COMPANY (6101-61-05), E-46, CHAMBAL INDUSTRIAL AREA, KOTA - 324007
PH :0744-6450918.

1333. BHATIA & COMPANY (6101-61-06), PLOT NO. E-222, ROAD NUMBER 5, INDRAPRASTHA INDUSTRIAL AREA, KOTA, RAJASTHAN. - 324005
PH :7446451110.

KOTPUTLI

1334. PREM MOTORS PVT. LTD. (MH09-MH-01), NH-8, BUCHARA COLONY, OPP. SHAKTI VIHAR, KOTPUTLI, JAIPUR - 303108
PH :8058794312.

KUCHAMAN

1335. SHRI MANGALAM AUTO PVT. LTD. (VA02-VA-01), SUDARSHAN NAGAR, BURSU ROAD, KHASRA NO.148, KUCHAMAN. - 341508
PH :9649518518.

MAHWA

1336. VIPUL MOTORS PVT. LTD. (BKZ1-BKZ-01), KHASRA NO.37/384, BHARATPUR ROAD BYE-PASS, N.H.-11, MAHWA, DISTT. DAUSA (RAJASTHAN) - 321608
PH :9887447928.

MAKRANA

1337. SHRI MANGALAM AUTO PVT. LTD. (CFX1-CFX1-01), KHASRA NO. 609/4, NEAR BAJAJ SHOWROOM, MANGLANA ROAD, MAKRANA, DISTRICT – NAGAUR. - 341505
PH :7231913913.

MALPURA

1338. K.P. AUTOMOTIVES PVT. LTD. (BLB1-BLB-01), PLOT NO.07, SHRI KALYAN NAGAR COLONY, JAIPUR-KEKRI ROAD, MALPURA - 304502
PH :9549656456.

NAGAUR

1339. SHRI MANGLAM AUTO PVT. LTD. (HL03-HL-01), KHASRA NO. 1479/982 & 1478/83, BIKANER ROAD, NAGAUR.
PH :01582-2242828, 242400,9116007210.

NASIRABAD

1340. AJMER AUTO AGENCIES PVT. LTD. (B201-VB-04), CHAVANI BOARD NO:1613, HAWA CHAKKI, NASIRABAD ROAD, NASIRABAD, DISTT. AJMER - 305601
PH :9314391011.

NATHDWARA

1341. LOHIA AUTOMOBILES (X201-TZ-02), NH-8, LAL BAG, NATHWARA, DISTRICT: RAJSAMAND - 313301
PH :2953-234761.

NEEM KA THANA

1342. JAMU AUTOMOBILES (P) LTD (K701-TV-03), NEAR TOLL PLAZA, KOTPUTLI ROAD, NEEM KA THANA, SIKAR - 332713
PH :1574-231575.

NEEMRANA

1343. FORTUNE CARS (A UNIT OF JYOTI AUTOMOBILES PVT LTD) (OP01-OP-01), F-42 & 42(B), PHASE-1, NEEMRANA, TEHSIL: BEHROR, DISTT. ALWAR - 301705
PH :8875004356.

NOHAR

1344. AUDI MOTORS LTD (VE02-VE-01), OPP. RAILWAY STATION, NOHAR, DISTRICT-HANUMANGARH - 335523
PH :1555-220485.

NOKHA

1345. AUDI MOTORS LTD. (I501-I5-01), F-46, RIICO EXTENSION, NOKHA INDUSTRIAL AREA, NOKHA DISTT- BIKANER (RAJASTHAN) - 334803
PH :8875010555.

PALI

1346. LMJ SERVICES (6502-J9-03), KHASRA NO. 771/1, JODHPUR PALI ROAD, PALI - 306401
PH :2932-256277.

PAOTA

1347. K P AUTOMOTIVES PVT. LTD. (BRH1-BRH-01), PATTA SANKHYA 31, MISAL SANKHYA 89, NEAR BAMORIA PETROL PUMP, NH-8, PAOTA, RAJASTHAN. - 303106
PH :9462686008.

PRATAPGARH

1348. BHATIA AND CO (PN01-PN-01), CHITTORGARH-PRATAPGARH ROAD, GRAM-BAMBOTARA, PRATAPGARH (RAJASTHAN) - 312605
PH :9414397142.

RAISINGHNAGAR

1349. AUDI MOTORS (BHK1-BHK-01), PLOT NO. H-2, INDUSTRIAL AREA, RAISINGHNAGAR, DISTRICT – SRIGANGANAGAR. - 335051
PH :9982638516.

RAJGARH

1350. MG MOTORS (IY01-IY-01), ALWAR SIKANDRA MEGA HIGHWAY, VILLAGE DIGAWARA, TEHSIL RAJGARH DISTT. ALWAR - 301408
PH :9001781777.

RAJSAMAND

1351. LOHIA AUTOMOBILES (X201-X2-01), BHILWARA ROAD,KHANKROLI,RAJSAMAND DISTT, RAJSAMAND - 313301
PH :2952-320460.

RAMGANJMANDI

1352. BHATIA & COMPANY (BAZ1-BAZ-01), KHAIRABAD ROAD, KHASARA NO. 753, A.S.I COLONY, RAMGANJ MANDI - 326519
PH :9414085790.

RAWATBHATA

1353. BHATIA AND COMPANY (JQ01-JQ-01), NEAR INDIAN OIL PETROL PUMP, KOTA ROAD, RAWATBHATA , DIST. CHITTORGARH, RAJASTHAN. - 323307
PH :1475-214999,9462719294.

SAGWARA

1354. TECHNOY MOTORS INDIA PVT. LTD. (CK01-CK-01), BANSWARA ROAD, CHUNGINAKA, NR. CENTRAL JAIL, SAGWARA, DUNGARPUR DISTT., RAJASTHAN - 314025
PH :9530306910.

SAWAI MADHOPUR

1355. PREM MOTORS PVT. LTD. (FY03-FY-01), PLOT NO.14, RIICO INDUSTRIAL AREA, KHERDA, SAWAI MADHOPUR - 322001
PH :8058791638.

SHAHPURA

1356. K.P. AUTOMOTIVES (P) LTD. (1104-NH-05), VILLAGE RAJPURA,GRAM PANCHAYAT BIDARA,NH-8, SHAHPURA - 303103
PH :8696934964.

SIKAR

1357. JAMU AUTOMOBILES (P) LTD (K701-K7-01), F-54,,JAIPUR ROAD (NH-11),SIKAR - 332001
PH :1572-245515.

SIROHI

1358. NAVNEET MOTORS (4902-LK-03), PLOT NO. 8,BHADRANAGAR NAGAR, ANADRA ROAD, SIROHI - 307001
PH :2972-222917.

SOJAT

1359. LMJ SERVICES LTD. (BWI1-BWI-01), KHASRA NO. – 186/1, NH-8, NEAR ASHOK LEYLAND WORKSHOP, SARDARPURA, SOJAT , RAJASTHAN - 306104
PH :306104.

SRIGANGANAGAR

1360. AUDI MOTORS LTD (U201-U2-01), NEW AUTOMOBILE MARKET,SURATGARH-HANUMANGARH ROAD, SRIGANGANAGAR - 335001
PH :0154-2466225.

1361. AUDI MOTORS LTD (U201-U2-03), CHAK 1G CHOTI, NH15, SRIGANGANAGAR, RAJASTHAN - 335001
PH :9982638516.

SUJANGARH

1362. AUDI MOTORS PVT. LTD. (BRB1-BRB-01), KHASRA NO.459/333, SALASAR ROAD, NEAR ANAJ MANDI, SUJANGARH , DISTT. CHURU - 331507
PH :7665722860.

SUMERPUR

1363. L.M.J. SERVICES LTD. (6502-VC-08), G-14 JAKHAMATA INDUSTRIAL AREA, OPP. DASHEREA GROUND, SUMERPUR - 306902
PH :02933 -274977,274978,9414411609.

SURATGARH

1364. AUDI MOTORS LTD (U201-LG-02), OPP. RELIANCE PETROL PUMP,NH-15, SURATGARH - 335804
PH :1509-224227, 224228.

TONK

1365. K P AUTOMOTIVES PVT LTD (GM01-GM-01), F-94, RIICO INDUSTRIAL AREA, TONK , RAJASTHAN - 304001
PH :1432-8696925252.

UDAIPUR

1366. NAVNEET MOTORS (4901-49-01), 7 CITY STATION ROAD,UDAIPUR - 313001
PH :0294-415143.

1367. NAVNEET MOTORS (4902-49-01), S-140,MADRI INDUSTRIAL AREA,OPP. BSNL OFFICE, UDAIPUR - 313002
PH :0294-2494451-55.

1368. TECHNOY MOTORS INDIA PVT. LTD. (4903-49-02), NH-8, GOVERDHAN VILLAS, DEVALI, NEAR JEEVAN TARA RESORT, UDAIPUR - 313002
PH :2955-220304.

SIKKIM

GANGTOK

1369. ENTEL MOTORS (B901-B9-01), 6TH MILE, P.O.TADONG, GANGTOK, SIKKIM - 737102
PH :3592-649125, 232341, 232059,.

JORTHANG

1370. ENTEL MOTORS (B901-ND-02), PIPALEY ROHTAK, NEAR JNU SCHOOL, WEST SIKKIM, JORTHANG - 737121
PH :3595-257030, 257020, 257069.

TAMIL NADU

ANNUR

1371. JAI KRISHNA AUTO SALES PVT. LTD (DN01-DN-01), SF NO.266/1B, OTTRAPALAYAM VILLAGE, OPP. TO KG SCHOOL, ANNUR,COIMBATORE (DIST), TAMILNADU - 641653
PH :0422-04254-262744/ 9788850733.

ARIYALUR

1372. PILLAI & SONS (EB01-EB-01), NO.1/1 , NEAR ULAVAR SANTHAI, JAYAMKONDAM ROAD, ARIYALUR (TAMIL NADU). - 621704
PH :9442281302/ 9442418751.

BHAVANI

1373. AMBAL AUTO (H701-IG-05), NO.5/1072, LAKSHMI NAGAR, NH-47, VASAVI COLLEGE (P.O.), BHAVANI, ERODE (DIST), TAMIL NADU. - 638316
PH :0424-2230408.

CHENGALPATTU

1374. AIE CARS PVT. LTD. (BBS1-BBS-01), PLOT NO. 98/1, PULIPAKKAM VILLAGE, CHENGALPETTU, DISTRICT-KACHEEPURAM, TAMIL NADU. - 603002
PH :7299057387.

CHENNAI

1375. J.J IMPEX (MARUTI SERVICE MASTERS) (1485-14-01), # 9, (SP),THIRU-VI-KA INDUSTRIAL ESTATE, GUINDY, CHENNAI - 600032
PH :044-43563366, 43563367.

1376. A.B.T LTD (1401-14-01), 102, MOUNT ROAD, GUINDY, CHENNAI - 600032
PH :044-42254544, 42254554.

1377. A.B.T LTD (1401-14-05), A/A2, BHARANI STUDIO COMPLEX, DR. BHANUMATHI KRISHNA ROAD,22, ARCOT ROAD, SALIGRAMMAM, CHENNAI - 600093
PH :044-23650488, 23650490.

1378. A.B.T LTD (1401-14-06), NO. 1 & 2, VASANTHA PRESS,ROAD, OPPOSITE MALAR HOSPITAL, ADYAR, CHENNAI - 600020
PH :044-24465814 , 24465815.

1379. A.B.T LTD (1401-14-07), NO. 422, KOLAPERUMAL SCHOOL STREET, POONMA MALLE HIGH ROAD, CHENNAI - 600106
PH :044-42267603, 42267621.

1380. A.B.T LTD (1411-14-01), 29, WALLES ROAD, OPP. ALBERT THEATER, EGMORE, AMBATTUR, CHENNAI - 600058
PH :044-42281720/708.

1381. C.A.R.S. INDIA PVT LTD. (1403-14-01), 16 & 17 INDUSTRIAL ESTATE, AMBATTUR, CHENNAI - 600058
PH :044-26359600, 42947900.

1382. C.A.R.S. INDIA PVT LTD. (1403-14-02), NO.17, LATTICE BRIDGE ROAD, ADYAR, CHENNAI - 600020
PH :044-24461584, 24461584..

1383. C.A.R.S. INDIA PVT LTD. (1403-14-03), 4/321, OLD MAHABALIKPURAM RD. , KOTTIVAKKAM, CHENNAI - 600040
PH :44-43590914, 4294830.

1384. C.A.R.S. INDIA PVT LTD. (1403-FP-04), NO.503, G.N.T. ROAD, REDHILLS, CHENNAI - 600066
PH :044-26323434/3737.

1385. C.A.R.S. INDIA PVT LTD. (1403-14-05), PLOT NO.-80, BABU JAGAGEVAN RAM STREET, GERUGAMBAKKAM, CHENNAI - 600112
PH :044-23821862/ 23821852.

1386. KAPICO MOTORS (INDIA) PVT. LTD (1420-14-03), PLOT NO. SP-35, 1ST MAIN ROAD, AMBATTUR INDUSTRIAL ESTATE, CHENNAI - 600058
PH :044-43445000/45968000.

1387. KAPICO MOTORS (INDIA) PVT. LTD (1420-14-02), 5,THIRUMURUGAN ST, KOYAMBEDU, CHENNAI - 600107
PH :044-64599892, 64599896..

1388. KHIVRAJ MOTORS LTD (1404-14-01), 623 MOUNT ROAD, CHENNAI - 600006
PH :044-42269575.

1389. POPULAR VEHICLES & SERVICES LTD. (1410-14-01), NO.11, ARUNACHALAM ROAD, SALIGRAMAM, CHENNAI - 600093
PH :044-65877973, 974, 975, 65610801, 802, 803, 804, 805, 806, 42136611.

1390. POPULAR VEHICLES & SERVICES LTD. (1410-14-02), OLD NO.155, NEW NO.123, PONRANJITHAM COMPLEX, MEDAVAKKAM MAIN ROAD, NEAR BUS TERMINUS, KEEKATTALAI, CHENNAI - 600117
PH :044-64525444/64526444.

1391. POPULAR VEHICLES & SERVICES LTD. (1410-14-03), NO. 3, 200 RING ROAD, RETTERI JUNCTION, RETTERI , CHENNAI - 600099
PH :044-64626410/ 64626411.

1392. VISHNU CARS (1427-14-02), 176/1, LUZ CHURCH ROAD, NEAR KAMADHENU THEATRE MYLAPORE, CHENNAI - 600004
PH :044-24661973/74/75.

1393. VISHNU CARS (1427-14-01), NO. 91, GST ROAD, ALWITONE ESTATE, BEHIND LAXMI THEATRE, PALLAVARAM, CHENNAI - 600043
PH :044-40175555.

1394. KHIVRAJ MOTORS LTD (1404-14-03), SURVEY NO. A1& A2, SIDCO INDUSTRIAL ESTATE, GUINDY, CHENNAI - 600032
PH :044-43542303/05/06.

1395. ABT LTD (1401-14-0D), NO.2/170, ECR ROAD, INJAMBAKKAM, CHENNAI TAMIL NADU. - 600041
PH :044-24490585/86, 42281700, 42281749.

1396. AIE CARS (A UNIT OF A.I. ENTERPRISES (P) LTD.) (1484-14-01), PLOT NO.1,2,3 & 4, SURVEY NO.91/2, B1, A2 & B, NEELANKARAI, EAST COAST ROAD, CHENNAI - 600115
PH :044-30193020/30193019.

1397. RAJALAKHSMI CARS (1486-14-01), OLD DOOR NO.69, NEW DOOR NO.20,GRAND NELLORE TRUNK ROAD, MADHAVARAM, CHENNAI . - 600060
PH :044-33015454/ 8939995454.

1398. KHIVRAJ MOTORS PVT. LTD. (1480-14-02), PLOT NO.119 & 120, ELECTRICAL & ELECTRONICS INDUSTRIAL ESTATE, PERUNGUDI, CHENNAI - 600096
PH :44-9043019626/ 7092033013.

1399. KAPICO MOTORS (INDIA) PVT. LTD (1420-14-04), NO.225,JAWAHARALAL NEHRU ROAD, KOYAMBEDU, CHENNAI - 600107
PH :044-42006000-23.

1400. ABT LTD (1401-14-0E), NO. 1/132, RAJEEV GANDHI SALAI, SHOLINGANALLUR, DISTRICT – CHENNAI, TAMIL NADU. - 600119
PH :044-24502185-87.

1401. VISHNU CARS PVT. LTD. (1427-14-03), 4/13 LOYAL GARDEN, KALAHATHAMMAN KOVIL STREET, RAMAPURAM, CHENNAI, TAMIL NADU. - 600089
PH :044-8754440002/ 9677244332.

1402. VISHNU CARS PVT. LTD. (1487-14-01), NO.203 TO 206 MOUNT POONAMALLE ROAD, KATTUPAKKAM, CHENNAI - 600056
PH :26792961/ 26792962.

1403. VISHNU CARS PVT. LTD. (1487-14-02), NO.120, MAMBAKKAM MAIN ROAD, MEDAVAKKAM, CHENNAI - 600100
PH :044-9840929994/ 9840944478.

1404. VISHNU CARS PVT. LTD. (1427-14-04), NEW S. NO. 314/1B1A, PALLAVARAM – THORAIPAKKAM RADIAL ROAD, NEAR OLD CHETTINADU CEMENT GOWDOWN, KEELAKATTALAI, CHENNAI. - 600117
PH :044-9940057775.

1405. VISHNU CARS PVT. LTD. (1427-14-06), PLOT NO. 4, MORISON 4 STREET, ALANDUR, CHENNAI. - 600016
PH :044-32531117.

1406. RAJALAKSHMI CARS PVT. LTD. (1486-14-02), OLD NO. 27, NEW NO. 22A, ALAPAKKAM MAIN ROAD, MADURAVOYAL, CHENNAI. - 600095
PH :044-43870090, 893999541.

1407. KAPICO MOTORS (INDIA) PVT. LTD (1420-14-06), PLOT NO. G30, 3RD MAIN ROAD, 9TH STREET AMBATTUR INDUSTRIAL ESTATE, DIAGONALLY TO TELEPHONE EXCHANGE, CHENNAI. - 600058
PH :7401930335.

COIMBATORE

1408. A.B.T LTD (4101-41-05), LAKSHMI THEATRE BUILDING, T.S. NO. 1199/2, TS WARD NO. 3, KEMPATTY COLONY, SOUTH UKKADAM, COIMBATORE - 641001
PH :0422-4232660, 4232666.

1409. A.B.T LTD (4101-41-06), 744, PULIYAKULAM ROAD, P.N. PALAYAM, COIMBATORE - 641037
PH :0422-4232588, 4232550.

1410. A.B.T LTD (4101-41-08), 15/55-C, ALAGESAN ROAD (EAST), METTUPALAYAM ROAD, COIMBATORE - 641043
PH :0422-228155.

1411. A.B.T LTD (4101-41-0A), NO 49, PANKAJA MILL ROAD, OPP INDIAN EXPRESS OFFICE, RAMANATHAPURAM, COIMBATORE - 641045
PH :0422-4516000, 4390434.

1412. AMBAL AUTO (4103-41-01), IYER HOSPITAL PREMISES, TRICHY ROAD, COIMBATORE - 641005
PH :0422-3075000, 3075001.

1413. AMBAL AUTO (4103-41-03), 555, NSR ROAD, SAIBABA COLONY, COIMBATORE - 641011
PH :0422-3075211, 3075203..

1414. AMBAL AUTO (4103-41-08), SF-94, SATHY MAIN ROAD, VISWASAPURAM, SARAVANNAMPATTI, COIMBATORE, - 641013
PH :0422-3075800.

1415. AMBAL AUTO (4103-41-07), NO 44, KANNUSAMY GOUNDER STREET, OORGOUNDER THOTTAM, SANGANUR, COIMBATORE - 641027
PH :0422-2331646.

1416. JAIKRISHNAA AUTOSALES PVT. LTD. (4107-41-01), 8/60-C&8/62-D, METTUPALAYAM ROAD, G.N.MILLS POST , NEARJOHNBOSCO CHURCH,COIMBATORE - 641029
PH :0422-4519140.

1417. JAIKRISHNAA AUTOSALES PVT. LTD. (4107-41-02), DOOR NO. 48, KAMARAJAR ROAD, LAKSHMIPURAM, PEELAMEDU, COIMBATORE, TAMIL NADU - 641004
PH :0422-4383220.

1418. AMBAL AUTOMOBILES (4103-41-0C), SENGUPTA STREET, RAM NAGAR, COIMBATORE. - 641009
PH :0422-3009600/ 3009602.

1419. SREE SARADHAMBAL AUTOMOBILES PVT. LTD. (4103-41-0D), 98/1 VILANKURICHI MAIN ROAD, THANEER PANDAL ROAD, COIMBATORE - 641004
PH :0422-2511773.

1420. AADHI CARS PVT. LTD. (4108-41-01), NO.176/2, SATHYAMANGALAM ROAD, SARAVANAPATTI, COIMBATORE - 641035
PH :8754009117/ 8754045977.

1421. ABT LTD (4101-41-0D), 36-A GANDHI NAGAR, SUNDARAPURAM, COIMBATORE (DIST) COIMBATORE - 641024
PH :0422-9994408618/ 9500911243.

1422. AADHI CARS PVT. LTD. (4108-41-02), NEAR KOVAI MEDICAL CENTRE & HOSPITAL, AVINASHI ROAD, CIVIL AERODROME POST, CHINNIYAMPALAYAM, COIMBATORE - 641004
PH :0422-8754045421/ 8754045443.

1423. AADHI CARS PVT. LTD. (4108-41-03), NO.71, OLD SRIRAM THEATRE COMPLEX, MARUDHA MALAI MAIN ROAD, VADAVALLI, COIMBATORE - 641041
PH :0422-3000211/ 3000204.

1424. AADHI CARS PVT. LTD. (4108-41-04), PLOT NO.295, RADHA RANI THEATER COMPLEX, NEAR JAYASHANTHI THEATER, TRICHY ROAD, ONDIPUDUR, COIMBATORE-. - 641005
PH :4000777.

1425. SREE SARADHAMBAL AUTOMOBILES PVT. LTD. (4103-41-0E), PLOT NO. 210, PALAKAD ROAD, BK PUDUR, COIMBATORE, TAMIL NADU. - 641008
PH :9047077775.

1426. JAIKRISHNAA AUTOSALES PVT. LTD. (4107-OH-04), NO.12/190 SRKV PORT, MTR ROAD, P.N. PALAYAM, COIMBATORE - 641020
PH :0422-698899.

COONOOR

1427. AMBAL AUTOMOBILES (3G01-3G-01), 78 E, BRINDAVAN SCHOOL ROAD, CONOOR, NILGRIS DIST- TN - 643102
PH :0423-2202254.

CUDDALORE

1428. A.B.T LTD (5Q01-5Q-01), K. V. SUBRAMANIAM NAGAR, CHIDAMBARAM MAIN ROAD, CUDDALORE O. T - 607003
PH :04142-227699, 227599..

DHARAPURAM

1429. AMBAL AUTO (H701-QN-04), OPP. TO ANJANEYAR TEMPLE, NEAR FIVE CORNER, MADURAI ROAD, DHARAPURAM - 638656
PH :04258-301107/ 301103.

DHARMAPURI

1430. SRI AMMAN CARS INDIA PVT. LTD. (7Q01-5R-02), NEAR COLLECTOR BUNGALOW, OLD HOSUR ROAD, JETTIHALLI (PO), DHARMAPURI , TAMILNADU - 636807
PH :04342-233933.

DINDIGUL

1431. PLA MOTORS (S401-S4-01), NO. 5, TRICHY MADURAI BY PASS ROAD, NH-45, DINDIGUL - 624001
PH :0451-3098300.

ERODE

1432. SREE SARADHAMBAL AUTOMOBILES PVT. LTD. (H701-H7-01), 23/1, PERUND, URAI ROAD, ERODE, - 638011
PH :0424-3056600/ 3056602.

GOBICHETTIPALAYAM

1433. SREE SARADHAMBAL AUTOMOBILES PVT. LTD. (H701-QM-03), NO. 318, CUTCHERY, GOBICHETTIPALAYAM - 638476
PH :04285-302001/ 302005.

GUDUVANCHERY

1434. VISHNU CARS (BAD1-BAD-01), 52, THAILAVARAM VILLAGE, BEHIND HOTEL PATTIKADU, GUDUVANCHERRY, KANCHEEPURAM DISTT. - 603203
PH :9500121553/ 9677122225.

GUMMIDIPOONDI

1435. RAJALAKSHMI CARS PVT. LTD. (BIZ1-BIZ-01), PLOT NO. F-13, SURVEY NO. 262/2, SIPCOT INDUSTRIAL COMPLEX, VILLAGE – PAPPANAKUPPAM, GUMMIDIPONNDI, THIRUVALLUR - 601201
PH :8939995454 / 8939853972.

HARUR

1436. SRI AMMAN CARS INDIA PVT. LTD. (AAV1-AAV-01), 429/9, HARUR SALEM MAIN ROAD, HARUR POST, DHARMAPURI, TAMIL NADU - 636903
PH :04346-9790004273/ 9790004279.

HOSUR

1437. SRI AMMAN CARS INDIA PVT. LTD. (7Q01-7Q-01), P.O.- PERANDAPALLI,NH-7, KRISHNAGIRI MAIN ROAD, HOSUR, TAMILNADU - 635109
PH :4344-260277.

IDAPPADI

1438. THRIVENI CAR COMPANY PVT LTD. (HI01-HI-01), SURVEY NO.330/3B1B, AVANI PERUR KILMUGAM VILLAGE, IDAPPADI DISTT. SALEM - 637101
PH :04283-222300.

KANCHEEPURAM

1439. GANESH CARS PVT.LTD (C601-JA-02), ANBU NAGAR, DHIMMA SAMUDRAM POST, NEAR VELLA GATE, CHENNAI BANGALORE NH-4, KANCHEEPURAM - 631502
PH :044-67275222/27277771.

KARAIKUDI

1440. A.B.T LTD (4202-HX-05), 42-43 KOVILOOR ROAD, OPP. TNSTC DEPOT - 630302
PH :04565-232484, 232486..

KARUR

1441. A.B.T LTD (K401-K4-01), SF NO. 529/1, SALEM BY PASS,ROAD, VENGAMEDU CIRCLE, SEMMADAI - 639002
PH :04324-222261/62/63.

KATPADI

1442. GANESH CARS (C601-APA-04), 170/2B THIRUVALLAM ROAD, ARUMPARUTHI VILLAGE, KATPADI, VELLORE DISTT. - 632004
PH :0416-9842313139/ 9842333061.

KINATHUKADAVU

1443. AADHI CARS PVT. LTD. (BBI1-BBI-01), NO.212, KAMARAJ NAGAR, SOLAVALAM PALAYAM PANJAAYATH, KINATHUKADAVU DISTT. COIMBATORE (T.N.) - 642109
PH :0422-3000506/ 3000505.

KOTAGIRI

1444. AADHI CARS PVT. LTD. (BAS1-BAS-01), SURVEY NO.89/79, OOTY MAIN ROAD, KOTAGIRI, DISTT. NILGIRIS, TAMIL NADU. - 643217
PH :04266-8754045891/ 8754045442.

KOVILPATTI

1445. ASIR AUTOMOBILES PVT. LTD. (NO01-NO-01), OLD NO.1, NEW NO.13, SATTUR MAIN ROAD, KOVILPATTI (TAMIL NADU) - 628501
PH :04632-232220.

KRISHNAGIRI

1446. SRI AMMAN CARS INDIA PVT. LTD. (7Q01-QL-03), NH-7,NR. AAVIN DAIRY,MOTTUR,SALEM BYE PASS ROAD, KRISHNAGIRI, TAMILNADU - 635001
PH :9750699555/ 8220009348.

KUMBAKONAM

1447. PILLAI & SONS MOTORS CO. (E701-N4-02), 369/2 B, KUMBAKONAM CHENNAI MAIN ROAD, KUMBAKONAM , TANJAVUR - 612501
PH :0435-2442566,65.

MADURAI

1448. A.B.T LTD (4202-42-02), MADURAI-DINDIGAL BYE PASS ROAD,NEAR FATHIMA COLLEGE,MADURAI - 625018
PH :0452-2547108, 2547125.

1449. A.B.T LTD (4202-42-04), 09, 109A, GST ROAD, TIRUPARANKUNDRAM, MADURAI - 625005
PH :0452-4387050/51/52.

1450. SIVA AUTOMOTIVE TRADING PVT. LTD. (4205-42-01), 2C, GATE LOCK ROAD, NEAR NEW RAMNAD ROAD, MADURAI - 625016
PH :0452-2688888.

1451. SIVA AUTOMOTIVE TRADING PVT. LTD. (4205-42-02), NO. 6-A, TPK ROAD, NEAR SAIBABA TEMPLE, ANDALPURAM, MADURAI. - 625003
PH :0452-26888889.

1452. ASIR AUTOMOBILES PVT. LTD. (4206-42-01), D. NO. 28/5B, MELUR MAIN ROAD, UTHANKUDI, MADURAI. - 625107
PH :0452-4382220.

1453. MEENAKSHI AUTO ZONE PVT. LTD. (4207-42-01), PLOT NO. 25 D, SIDCO INDUSTRIAL ESTATE, KAPPALUR, MADURAI, TAMIL NADU. - 625008
PH :2489074.

MALLUR

1454. THRIVENI CAR COMPANY PVT LTD. (CDH1-CDH-01), SURVEY NO.50/4A, AMANI AMMAPALAYAM VILLAGE, DISTT.: DADHAGAPATTY SUB REGISTRATION , MALLUR DISTT. SALEM - 636309
PH :427-2422399, 2440000.

MAYILADUTHURAI

1455. PILLAI & SONS MOTORS CO. (E701-AG-04), 46,VELLALAGARAM VILLAGE, MAYILADUTHURAI, TAMILNADU - 609007
PH :04364-43542303/ 43542306.

METTUPALAYAM

1456. A.B.T LTD (4101-EU-0C), PLOT NO. 6 TO 9,PONVIZHA NAGAR, KARAMADAI KOVAI MAIN ROAD, METTUPALAYAM - 641043
PH :04254-228155.

NAGERCOIL

1457. SRIVATSA INTERNATIONAL PVT. LTD. (S502-S5-01), PLOT NO. 31B1-1, BEACH ROAD JUNCTION, KOTTAR, NAGERCOIL, DISTRICT-KANYAKUMARI, TAMIL NADU. - 629002
PH :04652-232344, 236344/ 8973423332.

NAMAKKAL

1458. SREE SARADHAMBAL AUTOMOBILES PVT. LTD. (X401-X4-01), SURVEY NO. 1/10-11, NEAR MURUGAN TEMPLE, SALEM ROAD, NAMAKKAL - 637001
PH :04286-307507, 307512.

1459. SREE SARADHAMBAL AUTOMOBILES PVT. LTD. (X401-X4-03), 1/412/1 NEAR PON NAGAR, MUDALAIPATTY, SALEM ROAD, NH-7, NAMAKKAL (TAMIL NADU) - 637001
PH :04286-307500-502.

OMALUR

1460. SRI AMMAN CARS INDIA PVT. LTD. (7Q01-UM-04), 123, 3B, NH-7, BANGALORE BYE PASS ROAD, KOTTAMETTUPATTI, OMALUR, SALEM (DIST.), TAMIL NADU - 636012
PH :04277-9790004273/ 9750799555.

1461. THRIVENI CAR COMPANY PVT LTD. (UM01-UM-01), PLOT NO. 44 & 45, PALANIYAPPA NAGAR LAYOUT, NH-7, KAMALAPURAM VILLAGE, OMALUR, DISTRICT – SALEM, TAMIL NADU - 636309
PH :04290-222611, 711.

OOTY

1462. AMBAL AUTO (4103-Y1-05), VIJAYANAGARAM FARM ROAD, NEAR ROSE GARDEN, OOTY - 643001
PH :0423-3075303, 3075311.

PENNAGARAM

1463. SRI AMMAN CARS INDIA PVT. LTD. (BXZ1-BXZ-01), SURVEY NO. 419/1, VILLAGE – PARUVADHANAALLI, PENNAGARAM, DHARMAPURI. - 636810
PH :9790036371.

PERAMBALUR

1464. PLA MOTORS (2305-DQ-04), SURVEY NO.88/1, A3,NH45, ELAMBALUR VILLAGE, PERAMBALUR, TAMILNADU - 621212
PH :0431-403361/3461.

POLACHI

1465. A.B.T LTD (L301-L3-01), NACHIMUTHU POLYTECHNIC CAMPUS, UDUMALPET ROAD, POLACHI - 642003
PH :04259-37010,37020.

PUDUKOTTAI

1466. PLA MOTORS (2305-5U-02), NO. 10, MARIAMALAI NAGAR, ALANGUDI- THIRUMAYAM ROAD, PUDUKOTTAI, - 622003
PH :04322-265566/67.

RAJAPALYAM

1467. A.B.T LTD (4202-5V-03), NO. 10/32, DHARMAPURAM, SRIVILLIPUTHUR MAIN ROAD, RAJAPALYAM - 626125
PH :04563-260298.

RASIPURAM

1468. SREE SARADHAMBAL AUTOMOBILES PVT. LTD. (BSJ1-BSJ-01), SURVEY NO:41/1 B1A, MOOLAKADU VILLAGE, MASAKALIPATTI, SALEM MAIN ROAD, RASIPURAM DISTT. NAMAKKAL - 637401
PH :04287-231177.

SALEM

1469. A.B.T LTD (4101-A2-03), 32 THAMANA CHETTY ROAD, ARISIPALAYAM, SALEM - 636009
PH :0427-4066988, 406999.

1470. THRIVENI CAR COMPANY PVT LTD. (A203-A2-01), 12/2E1, SUBRAMANIA NAGAR, 2ND GATE, JUNCTION ROAD, SALEM. - 636005
PH :0427-2440000/ 2336599.

1471. S.M.CARS PVT. LTD. (A204-A2-01), SF NO. 64/2C3, ATTUR SALEM BYPASS ROAD, PINANGUKARAR THOTTAM, SEELANIKANPATTY, SALEM. - 636202
PH :7094448000, 7034449000.

SANKAGIRI

1472. THRIVENI CAR COMPANY PVT LTD.
(BTN1-BTN-01), SURVEY NO.171/5B, KCK PLAZA, KACHERIDADU, DEPUTY COLLETCTOR ROAD, SALEM, SANKAGIRI (TAMIL NADU) - 637301
PH :4283-242600.

SANKARANKOVIL

1473. AADHI CARS PVT. LTD. (BXS1-BXS-01), PLOT NO. 132/H, OPPOSITE TO NEW TALUK OFFICE, TIRUVENGADAM ROAD, SANKARANKOVIL. - 627756
PH :04636-223331
8754043378.

SATHYAMANGALAM

1474. SREE SARADHAMBAL AUTOMOBILES PVT. LTD. (BGU1-BGU-01), SURVEY NO. 51, 54 & RS NO. 37, KOTTUVEERAMPALAYAM VILLAGE, SATHYAMANGALAM – 638 401, DISTRICT – ERODE, TAMIL NADU - 638401
PH :222026/ 222036.

SIVAKASI

1475. MEENAKSHI AUTO ZONE PVT. LTD.
(X602-X6-01), 372 D & E, ARUNACHALAM COMPLEX, THIRUTHANGAL ROAD, SIVAKASI. - 626123
PH :04562-231281.

SRIPERUMBUDUR

1476. RAJALAKSHMI CARS PVT. LTD. (7B01-7B-01), SURVEY NO. 150/1A, DOOR NO 1C, THERADI STREET, NEW VILLAGE NO 42, SRIPERUMBADUR, KANCHEEPURAM DISTRICT, TAMIL NADU. - 602105
PH :044-65683041.

SULUR

1477. JAI KRISHNA AUTO SALES PVT. LTD
(4107-TK-05), DOOR NO. 37 F, RANGANATHAPURAM, TRICHY ROAD, SULUR
PH :0422-3199901.

TANJAVUR

1478. PILLAI & SONS MOTORS CO. (E701-E7-01), 12A, SELVAM NAGAR, TANJAVUR, TAMILNADU - 613007
PH :04362-71723, 71724.

TENKASI

1479. AADHI CARS PVT. LTD. (BXR1-BXR-01), DOOR NO. 3/50-1, SURVEY NO. 447B, TIRUNELVELI MAIN ROAD, VILLAGE – KUNARAMANALLUR, TENKASI. - 627814
PH :04636-252050.

THIRUMULLAIVOYAL

1480. KAPICO MOTORS (INDIA) PVT. LTD
(CDW1-CDW-01), NO. 48, BALAJI NAGAR, NEW SIR IRVANSTADE FORD HOSPITAL, THIRUMULAIVOYAL DISTT. CHENNAI - 600062
PH :9551070545.

THIRUVALLUR

1481. KHIVRAJ MOTORS LTD (1404-HH-04), 2151, KAKKULUR ROAD, THIRUVALLUR - 602001
PH :044-27662888.

1482. KHIVRAJ MOTORS LTD (1404-HH-05), PLOT NOS.218,219,220,225,226,227.228 AND S.NOS.18/5,18/6, EMPIRE CITY PART-3, KAKKALLUR VILLAGE, THIRUVALLUR THALUK, THIRUVALLUR - 602001
PH :9791070359.

THIRUVARUR

1483. PILLAI & SONS MOTORS CO. (E701-LJ-03), THANJAI NAGARI ROAD, OPP. TO S. P. OFFICE - 610001
PH :04366-250250.

THUCKALAY

1484. SRIVATSA INTERNATIONAL PVT. LTD.
(BWQ1-BWQ-01), D NO. 5/76B, THIRUVITHANCODE ROAD, KERALAPURAM, MUTHALAKURICHI, VILLAGE – MUTHALAKURUCHI, THUCKALAY, DISCTRICT – KANYAKUMARI - 629174
PH :4651-252592, 8973218881.

TIRUCHENDUR

1485. ASIR AUTOMOBILES PVT. LTD. (CCJ1-CCJ-01), SURVEY NO. 220/1D1A, 221/3, 221/4, 221/5, 221/5A, 221/5B, PODHIGAI NAGAR, VILLAGE-VEERAPANDIYAPATINAM, THIRUCHENDUR, TUTUCORIN. - 628215
PH :04639-246220.

TIRUCHENGODE

1486. AMBAL AUTO (X401-QP-02), PLOT NO-10, OPP TO PONNUSWAMY KALYANA MANDAPAM, KOOTAPALLI COLONY, TIRUCHENGODE - 637001
PH :04288-282292/ 306726.

TIRUNAMALAI

1487. GANESH CARS PVT.LTD (C601-LX-03), NO.-5, NH-78, KRISHANAGIRI PONDY ROAD, CHINA KANKEYANUR, OPP SKP ENGG. COLLEGE, THIRUVANNAMALAI - 606601
PH :04175-249319.

TIRUNELVELLI

1488. AADHI CARS PVT. LTD. (A303-A3-01), PLOT NO. 261, MADURAI MAIN ROAD, KARAIERUPPU, TIRUNELVELI , TAMIL NADU - 627357
PH :0462-2300040/ 9500991487.

TIRUPUR

1489. A.B.T LTD (4101-Y7-09), NO. 4, SABHAPATHI PURAM, NEAR TMF HOSPITAL, TIRUPUR - 641601
PH :0421-4305686 , 4305640.

1490. SHASHTI CAR PVT LTD (Y701-Y7-01), SRI PADMINI GARDENS, KANGEYAM ROAD, OPP. ST JOSEPH SCHOOL, TIRUPUR - 641604
PH :0421-2430275/ 2430276.

TRICHY

1491. A.B.T LTD (2302-23-02), 4/40, COLLECTOR OFFICE ROAD, CANTONMENT, TRICHY - 620001
PH :0431-4221602 , 4221603..

1492. A.B.T LTD (2302-23-03), MADRAS TRUNK ROAD, MAMBALASALAI, TRICHY - 620005
PH :0431-4221555, 4221564.

1493. PLA MOTORS (2305-23-01), NO. 18/2, NA-45, DHEERAN NAGAR, TRICHY-DINDUGAL MAIN ROAD, TRICHY - 620009
PH :0431-2403361, 9843055561.

1494. PLA MOTORS (2305-23-03), 10A & B, ALXANDRIA ROAD, CANTONMENT, TRICHY - 620001
PH :0431-2411540/530.

TUTICORIN

1495. ASIR AUTOMOBILES PVT. LTD. (S603-S6-01), SURVEY NO. 25/1B, MAPPILLAIURINI VILLAGE, ETTAYAPURAM ROAD, TUTICORIN, TAMIL NADU - 628002
PH :2337220/ 7373120220.

UDUMALPET

1496. ABT LTD (QR01-QR-01), 2/3, PERIYAKOTTAI PIRIVU, S.V. MILL POST, UDUMALPET - 642126
PH :04252-222572/ 222573.

UTHANGARAI

1497. SRI AMMAN CARS INDIA PVT. LTD.
(CFY1-CFY-01), SURVEY NO. 104/1, 104/1B, VILLAGE – THANDIYAPANNUR, UTHANGARAI, KRISHNAGIRI. - 635304
PH :9790004273.

VALLIYUR

1498. AADHI CARS PVT. LTD. (BXQ1-BXQ-01), DOOR NO. 314A/11-14, WITHIN VADAKU VALLIOOR, REVENUE VILLAGE, VADAKKU VALLIOOR PANCHAYAT, RADHAPURAM TALUK, VALLIOOR. - 627002
PH :04857-223000.

VANIYAMBADI

1499. GANESH CARS PVT. LTD. (BJY1-BJY-01), NO. 197/1B1, NH-46 (AH-7), PETHAKALLUPALLI VILLAGE, NEAR TOLL GATE, VANIYAMBADI , VELLORE (DIST), TAMIL NADU. - 635801
PH :291520.

VELLORE

1500. GANESH CARS PVT.LTD (C601-C6-01), 91 NEW BY-PASS ROAD, VELLORE - 632004
PH :0416-6454221, 2233709.

VILLUPURAM

1501. A.B.T LTD (5Q01-QQ-02), 264/1, GINGEE MAIN ROAD, AYINAMPALAYAM, VILLUPURAM - 605602
PH :04146-225509.

VIRUDHACHALAM

1502. ABT LTD (BMA1-BMA-01), PLOT NO. 56, JUNCTION ROAD, NEAR SHANMUGA LODGE, VIRUDHACHALAM, DISTRICT – CUDDALORE, TAMIL NADU. - 606101
PH :04143-262631,32,33.

TELANGANA

ADILABAD

1503. ADARSHA AUTOMOTIVES PVT LTD
(BTM1-BTM-01), SURVEY NO:131/6 & 131/7, NH-44, ADILABAD TOWN ROAD, MAVALA, ADILABAD, TELANGANA. - 504001
PH :08732-7799784538.

ARMUR

1504. VARUN MOTORS PVT. LTD. (BBN1-BBN-01), SURVEY NO.277, ARGUL VILLAGE, JAKARANPALLY (MANDAL), ARMUR, NIZAMABAD DISTT. (A.P.) - 503224
PH :08643-8142281424: 26/26/27.

BHUPALPALLY

1505. ADARSHA AUTOMOTIVES PVT. LTD.
(D502-BCF-04), 6-113, JAWAHAR NAGAR, MAIN ROAD, SBH MAIN BRANCH ROAD, BHUPPALPALLY, DISTRICT - WARANGAL, ANDHRA PRADESH - 506169
PH :08715-7799790526.

CHEVELLA

1506. GEM MOTORS INDIA PVT. LTD. (CBL1-CBL-01), SURVEY NO. 17/A, MANDAL – CHEVELLA, DISTRICT – RANGA REDDY, TELANGANA. - 510101
PH :9912899128.

GADWAL

1507. SRI JAYARAMA MOTORS PVT LTD
(WP01-BHR-02), PLOT NO. 5 & 6, BESIDE RURAL POLICE STATION, KURNOOL ROAD, MAHABUB NAGAR DISTRICT, ANDHRA PRADESH - 500125
PH :08546-8096990074.

GHATKESAR

1508. ACER MOTORS PVT. LTD. (BYL1-BYL-01), 3-21, JODIMETLA, CHOUDA RIGID VILLAGE GHATKESAR MANDAL, DISTRICT – RANGA REDDY. - 501301
PH :040-9849017827.

HYDERABAD

1509. RETOUCH (1082-10-01), H.NO. 3-67/A, B, C, D,NEW NAGOLE COLONY,NAGOLE VILLAGE, HYDERABAD,NAGOLE, HYDERABAD
PH :040-9848062263.

1510. SAI SERVICE PVT. LTD. (1011-10-02), #2-3-505,ML GARDENS, AMBERPET, HYDERABAD (A.P.) - 500013
PH :040-65646565.

1511. GEM MOTORS (INDIA) PVT. LTD. (1009-10-01), RAGHUVENDRA SOCIETY,KONDAPUR,,HYDERABAD , ANDHRA PRADESH - 500084
PH :040-40506070.

1512. GEM MOTORS (INDIA) PVT. LTD. (1009-10-02), 2-11, SURVEY NO: 165,172,HYDERNAGAR, KUKATPALLY, HYDERABAD, ANDHRA PRADESH - 500072
PH :40-40302525.

1513. RKS MOTORS PVT. LTD. (1003-10-01), SABOC TOWERS, RAJBHAVAN ROAD, SOMAJIGUDA, HYDERABAD - 500482
PH :040-3371115, 33.

1514. RKS MOTORS PVT. LTD. (1003-10-02), R-4/A,IDA BLOCK, INDUSTRIAL ESTATE,UPPAL, HYDERABAD - 500039
PH :040-7200193, 7204444.

1515. RKS MOTORS PVT. LTD. (1003-10-04), 16-11-19/5/2/C, SALEEM NAGAR COLONY,MALAKPET (NEAR FARHAT HOSPITAL),HYDERABAD - 500036
PH :040-23434576, 77.

1516. RKS MOTORS PVT. LTD. (1003-10-05), 11-6-191/192,OPP. HOTEL HARSHA,PUBLIC GARDEN ROAD, NAMPALLY, HYDERABAD - 500001
PH :040-23432390, 391.

1517. SAI SERVICE PVT. LTD. (1011-10-01), PLOT NO. 88, INDUSTRIAL AREA,C.I.E. GANDHI NAGAR, ,BALANAGAR, HYDERABAD - 500037
PH :040-44604000.

1518. THE MITHRA AGENCIES (1002-10-01), 1-8-670, NEAR RTC CROSS ROAD,AZAMABAD INDUSTRIAL AREA, HYDERABAD, - 500020
PH :040-7662481, 7618488, 7641786,7630422.

1519. THE MITHRA AGENCIES (1002-10-03), PLOT NO. 3-4-10,NEAR MADHAPUR POLICE STATION, MADHAPUR, HYDERABAD - 500081
PH :040-23114567, 3444.

1520. THE MITHRA AGENCIES (1002-10-04), 8-18-138, PLOT NO. 8,NEAR MARGADARSI CHIT FUND,L.B. NAGAR RING ROAD, RR DIST,HYDERABAD - 500074
PH :040-24122222.

1521. THE MITHRA AGENCIES (1002-10-05), PLOT NO. 19,20 & 21,ROAD NO. 10,IDA NACHARAM, HYDERABAD - 500076
PH :040-27176999.

1522. VARUN MOTORS PVT. LTD. (4603-10-04), B-11 CO-OPERATIVE INDUSTRIAL ESTATE, BALANAGAR, HYDERABAD, - 500037
PH :040-3778035,3778036, 3777979.

1523. VARUN MOTORS PVT. LTD. (4603-10-0A), 1-11-200,SHAMLALA BUILDING BEGUMPET, HYDERABAD - 500016
PH :040-27766533.

1524. VARUN MOTORS PVT. LTD. (4603-10-06), SHOP NO. 31, SRIKRUPA MARKET, D.NO. 16-10-1/F/31, MALAKAPET, HYDERABAD - 500036
PH :040-4553395, 4547676.

1525. VARUN MOTORS PVT. LTD. (4603-10-0B), ADITYA NAGAR COLONY, ,ADITYA NAGAR COLONY, TOLICHOWKI, SHAIKPET (VILLAGE, HYDERABAD, HYDERABAD - 500008
PH :40-64551700.

1526. VARUN MOTORS PVT. LTD. (1010-10-01), PLOT NO. VI- VII A & B,UNDER WARD NO. 10, AUTONAGAR, VANASTALIPURAM, HYDERABAD, R. R. DISTT - 500070
PH :40-24027677.

1527. VARUN MOTORS (1012-10-01), MARUTI AUTHORISED DEALER, SURVEY NO.115, IT PARK, NANAKRAMGUDA, GACHIBOWLI, HYDERABAD - 500008
PH :040-9985104860, 69997979.

1528. RKS MOTORS PVT. LTD. (1003-10-08), D.NO.1-10-1/285/1, OPP. VEGITABLE MARKET, ECIL CROSS ROADS, KUSAIGUDA, HYDERABAD - 500062
PH :040-49054905,9010822210.

1529. SAI SERVICE PVT. LTD. (1011-10-04), H.NO.16-2-839/4/10, SAIDABAD, L.B.NAGAR, HYDERABAD. - 500059
PH :040 -8886512309,23808080.

1530. VARUN MOTORS PVT. LTD. (4603-10-0G), 1-10-28/1 SY. NO.285, KUSHAIGUDA, NEAR ECIL X ROADS, HYDERABAD - 500062
PH :040-7799600098.

1531. VARUN MOTORS PVT. LTD. (4603-10-0H), PLOT NO. 1354/1, ROAD NO. 1, NEAR IOC PETROL PUMP, JUBLEE HILLS, HYDERABAD, ANDHRA PRADESH - 500033
PH :040-64551700.

1532. VARUN MOTORS PVT. LTD. (4603-10-0J), PLOT NO. 1-45, SY.NO:1 TO 7, GOPINATH COMPLEX, TARANAGAR, LINGAMPALLY, HYDERABAD, RANGAREDDY DISTRICT, TELANGANA STATE - 500019
PH :040-9885206555.

1533. KALYANI MOTORS PVT. LTD. (1018-10-01), PLOT NO. A-23 & A31/1, I.D.A, NACHARAM, HYDERABAD. - 500076
PH :040-66985555, 9100114877.

1534. GEM MOTORS (INDIA) PVT. LTD. (1009-10-03), SURVEY NO. 135/A & 135/AA, MANIKONDA, RAJENDRA NAGAR MANDAL, RANGAREDDY DISTRICT, HYDERABAD, TELANGANA. - 500089
PH :040-9912899128.

1535. JAYABHERI AUTOMOTIVES PVT. LTD. (1017-10-01), PLOT NO. 113, 114, 115 IN LUMBINI ENCLAVE CB SQUARE, VILLAGE – GACHIBOWLI, SHERLINGAMPALLY MNADAL, HYDERABAD, TELANGANA STATE. - 500032
PH :040-7680046666, 9704835556.

1536. JAYABHERI AUTOMOTIVES PVT. LTD. (1017-10-02), SURVEY NO.11/36, PLOT NO.32, 39 & 40, NEAR N CONVENTION CENTRE, KHANAMET, HYDERABAD, SHERLINGAMPALLY MANDAL, HYDERABAD. - 500081
PH :9704835556.

1537. KALYANI MOTORS PVT. LTD. (1018-10-02), M/S VIDHATA BINNY MODERN RICE MILL, BEARING NO. 8-4-15 IN SURVEY NO. 239 & 240 OF VILLAGE – KARMANGHAT, MANDAL – SAROORNAGAR, DISTRICT – RANGA REDDY, HYDERABAD. - 500079
PH :040-9014600700.

1538. ADARSHA AUTOMOTIVES PVT. LTD. (1019-10-01), H. NO. 2-4-43/15, SURVEY NO. 34, SOGBOWLI (PILLER NO. 185 OF P.V. NARSIMHA RAO EXPRESSWAY), RAJENDRANAGAR, UPPERPALLY, ATTAPUR, RANGA REDDY, HYDERABAD, TELENGANA. - 500048
PH :9703152222.

1539. SAI SERVICE PVT. LTD. (1011-10-07), PLOT NO,B-21 & B-34, BHEL ANCILLARY INDUSTRIAL ESTATE, RAMACHANDRAPURM, HYDERABAD - 502032
PH :040-766181100.

1540. ADARSHA AUTOMOTIVES PVT. LTD. (1014-10-01), 18-2-45 NEAR FLYOVER, CHANDRAYANGUTTA "X" ROAD, HYDERBAD - 500005
PH :040-8142326633.

1541. RKS MOTORS PVT. LTD. (1003-10-09), SURVEY NO.434, 5-5-33/19, BEHIND HUDA TRUCK PARKING, KUKATPALLY, DISTT: RANGAREDDY, HYDERABAD - 500072
PH :040-23432311.

1542. SAI SERVICE PVT. LTD. (1011-10-08), DOOR NO.7-2-C33 & C34, INDUSTRIAL ESTATE, SANATH NAGAR, HYDERABAD. - 500018
PH :040-9133346300.

JAGITIAL

1543. ADARSHA AUTOMOTIVES PVT LTD (N601-NU-04), HOUSE NO.-1-5-216/A,OPPOSITE TO KVA SUBSTATION, KARIMNAGAR ROAD, JAGTIAL, - 505327
PH :8724-8886152222.

JANGAON

1544. ADARSHA AUTOMOTIVES PVT. LTD. (KI01-KI-01), H.NO.339, HYDERABAD ROAD, JANGAON. - 506167
PH :8716-9959223393.

KAMAREDDY

1545. VARUN MOTORS PVT. LTD. (KX01-KX-01), H.NO.11-107/61, BESIDE:GURU RAGHAVENDRA COLONY, CHINNA MALLAREDDY VILLAGE, KAMAREDDY. - 503111
PH :08142-551166/77/88/99.

KARIMNAGAR

1546. ADARSHA AUTOMOTIVES PVT LTD (N601-N6-01), H.NO. 8-6-313/1,HYDERABAD ROAD,BY-PASS JUNCTION,KARIMNAGAR - 505001
PH :0878-2277200, 300.

1547. ADARSHA AUTOMOTIVES PVT LTD (N601-N6-05), H.NO.8-6-301/18, BY-PASS ROAD, AUTONAGAR, KARIM NAGAR, TELANGANA. - 505001
PH :0878-8886152222.

KHAMMAM

1548. MITHRA AUTO AGENCIES PVT LTD (2604-1G-02), SURVY NO. 182,WARANGAL ROAD, OPP. FCI GODOWNS,PEDA THANDA,KHAMMAM - 507003
PH :08742-222444.

KODAD

1549. PAVAN MOTORS PVT. LTD (BRP2-BRP-01), SURVEY NO. 42, KOMARBANDA REVENUE LIMITED, KODAD , DISTRICT – NALGONDA, TELANGANA - 508206
PH :8683-8008899995.

MANCHERIAL

1550. ADARSHA AUTOMOTIVES PVT LTD (N601-CM-03), BEHIND MAHINDRA TRACTORS SHOWROOM,BELLAMPALLY ROAD, MANCHIRIAL , DISTT. ADILABAD - 504208
PH :08736-255757.

MEHABOOB NAGAR

1551. SRI JAYARAMA MOTORS PVT. LTD. (WP01-WP-01), PLOT NO.C1 & C2, INDUSTRIAL ESTATE, METTUGADA, MEHBOOBNAGAR - 504001
PH :08542-256111, 9866545424.

MIRYALGUDA

1552. PAVAN MOTORS PVT. LTD (WR01-WR-01), SURVEY NO-940 &943, (OPPOSITE TO MINA ENGINEERING COLLEGE) NARKETPALLY ADDANKI BY-PASS ROAD,MIRYALAGUDA ,NALGONDA DISTRICT,ANDHRA PRADESH - 508207
PH :08689-8790900399.

MOINABAD

1553. GEM MOTORS (INDIA) PVT. LTD. (CFN1-CFN-01), SURVEY NO. 70, PLOT NO. 4, VILLAGE AND GRAM PANCHAYAT – HIMAYATH NAGAR, MANDAL – MOINABAD, DISTRCT – RANGA REDDY. - 500075
PH :9912899128.

NALGONDA

1554. PAVAN MOTORS PVT. LTD (AN01-AN-01), CHERLAPALLY VILLAGE, NALGONDA ROAD, NALGONDA - 508001
PH :08682 -247399,8790344499.

NIRMAL

1555. ADARSHA AUTOMOTIVES PVT LTD (N601-AA-02), H. NO. 1-1-131, ,SHASTRINAGAR, ,MANCHIRIAL ROAD, DISTT. ADILABAD, NIRMAL - 504106
PH :8734-9912752344.

NIZAMABAD

1556. VARUN MOTORS PVT. LTD. (1H02-1H-01), PLOT NO. GP 1-57/4/1,PANGARA BORGOAN,NIZAMABAD - 503230
PH :08642-234428.

PARGI

1557. VARUN MOTORS (CBO1-CBO-01), HOUSE NO. 2-356 JANGAIAH COMPLEX, SURVEY NO. 217/EE4, JAYANTHI NAGAR COLONY, MANDAL – PARGI, DISTRICT – RANGA REDDY. - 510501
PH :08556-988521055, 9885200000.

RAMAGUNDAM

1558. ADRASHA AUTOMOTIVES PVT. LTD. (BGA1-BGA-01), 5-6-172 SURVEY NO. – 259/B, MEDIPALLY SHIVAR, RAMAGUNDAM MUNICIPALITY, DISTRICT – KARIM NAGAR, ANDHRA PRADESH - 505209
PH :08728-8886144550.

RAMAYAMPET

1559. VARUN MOTORS PVT. LTD. (CDO1-CDO-01), SURVEY NO. 1626 & 1626/2 SITUATED AT BLOCK NO. 16, RAMAYAMPET, DISTRICT – MEDAK. - 502101
PH :9885208555.

SANGAREDDY

1560. SAI SERVICE PVT. LTD. (1011-OI-05), H.NO.4-8-92/1/4/5, AHMED NAGAR, OPP.GOVT.ITI, SANGAREDDY, MEDAK (DIST), ANDHRA PRADESH - 502001
PH :08455 -278090,7799360003.

SECUNDERABAD

1561. ACER MOTORS (K601-K6-01), A1, MOTI VALLEY,TRIMULGHERRY,SECUNDERABAD, - 500015
PH :040-7740774, 7747559.

1562. AUTOFIN LIMITED (K606-K6-01), SURVEY NO. 33, MEDCHAL ROAD, BOWENPALLY, SECUNDERABAD - 500011
PH :040-67295858.

1563. SAI SERVICE PVT. LTD. (1011-K6-06), PLOT NO. 1-8-308/3/1, PATIGADDA, BEGUMPET, SECUNDERABAD, TELANGANA - 500016
PH :040-27904644.

1564. VARUN MOTORS PVT. LTD. (4603-K6-0I), 1-10-176/1, BEHIND VARUN TOWERS-I, OPP. HYDERABAD PUBLIC SCHOOL, BEGUMPET, SECUNDERABAD, HYDERABAD, TELANGANA STATE. - 500016
PH :040-9985552452.

1565. RKS MOTORS PVT. LTD (K605-K6-01), PLOT NO. 207, TADBUND, SECUNDERABAD. - 500009
PH :040-23434520, 9010834567.

1566. PAVAN MOTORS PVT. LTD (K608-K6-01), PREMISES NO.6-1-17/A AND 6-1-18, WALKER TOWN, PADMARAO NAGAR, SECUNDERABAD. - 500025
PH :040-27502750.

1567. AUTOFIN LIMITED (K606-K6-02), SURVEY NO. 177/B & 178/C SITUATED AT VILLAGE – KOMPALLY, MANDAL – QUTHBULLAPUR, HYDERABAD.

SHAD NAGAR

1568. SRI JAYARAMA MOTORS (P) LTD (WS01-WS-01), SERVEY NO.445, FAROOQ NAGAR, SHADNAGAR, MAHABUB NAGAR DISTT. ANDHRA PRADESH. - 500216
PH :08548-8096991424.

SHANKARPALLY

1569. SAI SERVICES PVT. LTD. (CEX1-CEX-01), SURVEY NO. 203, HYDERABAD ROAD OPP. SM FUNCTION HALL ROAD, SHANKARPALLY, RANGA REDDY DISTT. - 501203
PH :8416-9966377888, 9912899128.

SIDDIPET

1570. ADARSHA AUTOMOTIVES PVT. LTD. (CAL1-CAL-01), SURVEY 197/A, VILLAGE – PONNALA, SIDDIPET, DISTRICT – MEDAK, TELANGANA. - 502103
PH :0457-888662222, 7799784525.

TANDUR

1571. VARUN MOTORS PVT. LTD. (CFR1-CFR-01), H. NO. 2-1-20/3, 2-1-20/3/A & 2-1-20/9, PLOT NO. 45, 46, 47, SURVEY NO. 57 OF MALREDDYPALLY VILLAGE, TANDUR MUNICIPALITY, VIKARABAD DISTRICT, TELANGANA. - 501141

THORRUR

1572. ADARSHA AUTOMOTIVES PVT. LTD. (BYV1-BYV-01), SURVEY NO.1 TO 5, BEARING M. NO.4-153/1, VILLAGE & MANDAL THORRUR DISTT. WARANGAL - 506163
PH :9059438007.

VIKARABAD

1573. GEM MOTORS (INDIA) PVT. LTD. (BYM1-BYM-01), SHOP NO. 3-2-93/2, VILLAGE – YENNAPALLY, VIKARABAD MUNCIPALITY, VIKARABAD, DISTRICT – RANGA REDDY, TELANGANA . - 501101
PH :8416-9912349840.

WANAPARTHY

1574. SRI JAYARAMA MOTORS (P) LTD (WQ01-WQ-01), SURVEY NO.1149, KURNOOL ROAD, WANAPARTHY (A.P.) - 509103
PH :08543-9542448662.

WARANGAL

1575. ADARSHA AUTOMOTIVES PVT LTD (D502-D5-02), PLOT NO.10, INDUSTRIAL AREA, MULUGU ROAD, WARRANGAL - 506007
PH :0870-2623359.

1576. ADARSHA AUTOMOTIVES PVT LTD (D502-D5-03), OPPOSITE TO ORUGALLU FILLING STATION, HUNTER ROAD, SHAYAMPET, HUNAMKONDA, WARANGAL - 506001
PH :0870-2523349, 9959223393.

ZAHIRABAD

1577. SAI SERVICE PVT. LTD. (BAT1-BAT-01), PLOT NO-5,NEAR IBP PETROL BUNK, NH-9,ALIPUR,ZAHIRABAD,MEDAK (DIST),ANDHRA PRADESH - 502220
PH :8451-9966377888.

TRIPURA

AGARTALA

1578. JAIN UDYOG (6901-69-01), ARUNDHUTI NAGAR, OPP. INDUSTRIAL ESTATE, AGARTALA - 799003
PH :0381-230542.

1579. JAIN UDYOG (6901-69-05), 58-B/C, INDUSTRIAL AREA ARUNDHATI NAGAR, AGARTALA. - 799003
PH :0381-2371402, 9436123592.

1580. JAIN UDYOG (6901-69-06), KHATIAN NO. 1843, MOUJA & TEHSIL – KHAYERPUR, JIRANIA SUBDIVISION, AGARTALA - 799008
PH :0381-9436121559.

AMBASSA

1581. JAIN UDYOG (CDT1-CDT-01), A.A. ROAD, OPPOSITE OF CHANDRAI PARA HS SCHOOL, AMBASSA, DHALAI, TRIPURA. - 799289
PH :9436123592.

DHARMANAGAR

1582. JAIN UDYOG (6901-RN-03), DHARMANAGAR COLLEGE ROAD, DHARMANAGAR, TRIPURA(NORTH). - 799250
PH :3822-23047, 9774040553.

UDAIPUR

1583. JAIN UDYOG (YU01-YU-01), DHWAJANAGAR INDUSTRIAL ESTATE,UDAIPUR,TRIPURA (SOUTH) - 799116
PH :3821-222640/9774020152.

UNION TERRITORY

PANCHKULA

1584. AUTO VOGUE PVT. LTD. (K303-K3-01), PLOT NO- 388, INDUSTRIAL AREA PHASE-1, PANCHKULA, HARYANA. - 134113
PH :8725099358.

UTTAR PRADESH

AGRA

1585. PRIME MOTORS (6681-66-01), 8B/7D, BYE PASS ROAD, DEV NAGAR, AGRA
PH :0562-2531881,2531882.

1586. MADHUSUDAN MOTORS PVT LTD (6603-66-01), B-5 LAWYERS COLONY, BYE PASS ROAD, AGRA - 282005
PH :0562-531102-05.

1587. MADHUSUDAN MOTORS PVT LTD (6603-66-02), GANESH GANJ, PRATAPPURA, AGRA - 282001
PH :0562-3297501.

1588. MADHUSUDAN MOTORS PVT LTD (6603-66-03), 6-A , VIBHAV INDUSTRIAL STATE, AGRA - 282007
PH :0562-3299221.

1589. MADHUSUDAN MOTORS PVT LTD (6603-66-04), 26/253, SULTAN GANJ KI PULIA, MAUZA LASKARPUR, AGRA - 283203
PH :9837097894.

1590. PREM MOTORS PVT. LTD. (6605-66-01), KHASRA NO.382,386,387,388, VILLAGE ARTHONI, DELHI-AGRA HIGHWAY, NH-2, AGRA, UTTAR PRADESH - 282007
PH :9690010795, 3215315/16.

1591. KTL PVT. LTD (6606-66-01), MUGHAL ROAD, KAMLA NAGAR, AGRA - 282004
PH :8449715033, 8449700000.

1592. PREM MOTORS PVT. LTD. (6607-66-01), 45, OPPOSITE AGRA COLLEGE, GOKULPURA, AGRA, UTTAR PRADESH - 282002
PH :0562-2523022, 9690010795.

1593. KTL PVT. LTD (6606-66-02), KHASRA NO. 171, SEWLA JAT, GWALIOR ROAD, AGRA, UTTAR PRADESH - 282001
PH :05622-410004.

1594. KTL PVT. LTD. (6606-66-03), 44/320 B, MAUJA BODLA, BODLA CHOWK, AGRA. - 282007
PH :0562-8449715091,7060404416.

AKBARPUR

1595. KTL PVT. LTD. (2801-LH-03), KANPUR ROAD, AKBARPUR - 209206
PH :7408409304.

1596. SMARTWHEELS PVT. LTD. (7201-LH-08), TANDA ROAD, VILL-BUDHAEEPUR, PO-KATRIYA YAKOOBPUR, AKBARPUR , DIST-AMBEDKAR NAGAR (U.P.) - 224122
PH :244570.

ALIGARH

1597. VINEET MOTORS (MSZ) (B681-B6-02), PLOT NO.D-138 &139, SECTOR-1, TALA NAGARI, RAMGHAT ROAD, ALIGARH
PH :9917473052, 9582123586.

1598. DEV MOTORS (P) LTD (B601-B6-01), NEAR BANNA DEVI, G.T.ROAD, ALIGARH - 202001
PH :0571-521771.

ALLAHABAD

1599. AMITDEEP MOTORS (2901-29-01), 26 SULEM SARAI, G.T ROAD, ALLAHABAD - 211001
PH :0532-2636301, 2436360.

1600. GREENLAND MOTORS (2903-29-01), 40, INDUSTRIAL ESTATE, TELEARGANJ, ALLAHABAD - 211004
PH :0532-9838107735.

1601. GREENLAND MOTORS (2903-29-03), 52/36, LUKERGANJ, ALLAHABAD - 211001

AMETHI

1602. KTL PVT LTD (1302-AAY-07), PLOT NO – E 32, INDUSTRIAL AREA TEKARIA, UPSIDC, GAURIGANJ, DIST: C.S.M.NAGAR - 227409
PH :05368-244445.

AURAIYA

1603. KULDEEP MOTORS (QJ01-QJ-01), NEAR INDIAN OIL TIRAHA, KANPUR ROAD, AURAIYA. - 206241
PH :9235358444.

AZAMGARH

1604. DEEP MOTORS (K501-K5-01), HARBANSHPUR NARAULI, AZAMGARH - 276001
PH :05462-325387.

1605. DEEP MOTORS (K501-K5-03), VILLAGE – BALDEV MADURI, TEHSIL – SAGRI, DISTRICT – AZAMGARH, UTTAR PRADESH. - 276138
PH :9838072923.

BAHERI

1606. KAVISHA MOTORS PVT. LTD. (BSB1-BSB-01), KASRA NO. 530, 531, 532, 533. NAINITAL ROAD, OPP. RAMLILA GROUND, BAHERI, DISTRICT – BAREILLY, UTTAR PRADESH - 243201
PH :7895980110.

BAHRAICH

1607. ANAND MOTORS (1301-5Z-05), LUCKNOW ROAD,BEHRAICH,UTTAR PRADESH - 271801
PH :7860786161.

BAKSHI KA TALAB

1608. BRIGHT 4 WHEEL SALES PVT. LTD. (1305-II-04), PLOT NO: 57 TO 60, KAUSHALABAD, BADHAULI BKT, PARGANA MOHANNA, SITAPUR ROAD, BAKSHI KA TALAB, LUCKNOW - 226020
PH :9838075960, 9628300000.

BALLIA

1609. DEEP MOTORS (K501-BA-02), MAIDEYPUR, RAJDHANI ROAD, BALLIA - 277001
PH :9838072917.

BALRAMPUR

1610. ANAND MOTOR AGENCIES LTD. (XB01-XB-01), NEAR BALRAMPUR CHINI MILLS, GONDA ROAD,BALRAMPUR-UTTAR PRADESH - 271201
PH :05263-232144.

BANDA

1611. MY CAR PVT. LTD. (2803-KV-03), KALUKUAN, TINDWARI ROAD, BANDA - 210001
PH :9839029868.

BARABANKI

1612. BRIGHT 4 WHEEL SALES PVT. LTD. (1305-6A-03), VILL. DHARSANIA, LUCKNOW ROAD, NAWABGANJ, BARABANKI - 225001
PH :9838075960.

BARAUT

1613. RAJ SNEH AUTO INDIA PVT LTD (4803-LL-04), DELHI SAHARANPUR ROAD, OPP.POLICE CHECK POST, NEAR VERDHMAN -DHARAM KANTA, BARAUT - 250611
PH :9837581179.

BAREILLY

1614. CORAL MOTORS (P) LTD. (5602-56-01), STATION ROAD, BAREILLY - 243001
PH :0581-559191.

1615. CORAL MOTORS (P) LTD. (5602-56-03), PILIBHIT BYE PASS ROAD, EXECUTIVE CLUB CROSSING, BAREILLY, UTTAR PRADESH - 243002
PH :0581-0581-2554922.

1616. KAVISHA MOTORS PVT. LTD. (5601-56-01), 4TH KM, RAMPUR ROAD, CLUTTER BUCKGANJ, BAREILLY - 243502
PH :0581-480404,5,6,7,8.

BASTI

1617. SMARTWHEELS PVT. LTD. (7201-6B-05), MANORI CHAURAHA, DUMARIYA GANJ ROAD, BASTI - 270002
PH :05542-286294.

BHADOHI

1618. VARANASI MOTORS PVT. LTD. (8402-TT-02), VARNASI ROAD, BHADOHI - 221401
PH :9838360662.

BIJNOR

1619. RAJ SNEH AUTO INDIA PVT LTD (4803-6D-03), PLOT NO. CFC INDUSTRIAL AREA, OPPOSITE SUGAR MILL, NAGINA ROAD, BIJNORE - 246701
PH :01342-246701.

BILASPUR

1620. AKANKSHA AUTOMOBILES PVT. LTD. (BCN1-BCN-01), NH-87 ,OPPOSITE SHAGUN BANQUET HALL, NEAR MILTON ACADEMY SCHOOL, RAMPUR NAINITAL ROAD, BILASPUR, DISTRICT – RAMPUR. - 244921
PH :7895600005, 7247800009.

BUDAUN

1621. CORAL MOTORS (P) LTD. (5602-NF-04), PLOT NO.- 72, BAREILY-MATHURA HIGHWAY, BUDAUN, UTTAR PRADESH - 132103
PH :9837891846.

BULANDSEHAR

1622. SK & COMPANY (M581-M5-02), KHASRA NO. 2261, NEAR T POINT , BY PASS SHIKARPUR ROAD , BULANDSHAHR.
PH :05732-235400.

BULANDSHAHR

1623. ROHAN MOTORS LTD. (T201-M5-02), PLOT NO-561, M.T. VILLAGE AKBARPUR, OPP. PANDIT PETROL PUMP, BULANDSAHAR, UTTAR PRADESH - 203001
PH :9758418546.

CHANDAUSI

1624. AKANKSHA AUTOMOBILES PVT. LTD. (XA01-XA-01), AZAD ROAD, NEAR ROADWAYS, CHANDAUSI (BHEEM NAGAR) - 202412
PH :254111.

DEOBAND

1625. ATELIER AUTOMOBILES (XK01-XK-01), OPPOSITE CIVIL COURT, MUZZAFARNAGAR HIGHWAY, DEOBAND - 247001
PH :7500250042.

DEORIA

1626. SMARTWHEELS PVT. LTD. (M601-M6-01), PLOT NO. C-7, AND SHED NO. D-3, GOVERNMENT INDUSTRIAL ESTATE MEHRA, DEORIA, DIST. -DEORIA, UTTAR PRADESH. - 274001
PH :05568- 7705800602.

ETAH

1627. MADHUSUDAN VEHICLES PRIVATED LTD. (XG01-XG-01), 472 ASROLI, GT ROAD, ETAH - 207125
PH :9837097894.

ETAWAH

1628. KULDEEP MOTORS (6E01-6E-01), PAKKA BAGH, KANPUR ROAD, ETAWAH - 206001
PH :05688-257029.

FAIZABAD

1629. SMARTWHEELS PVT. LTD. (7201-F5-02), SAHADAT GANJ, LUCKNOW ROAD, FAIZABAD, UTTAR PRADESH. - 224001
PH :05278-309333.

FARRUKHABAD

1630. MY CAR PVT. LTD. (2803-TS-04), NEKPUR KALAN, FARRUKHABAD - 209625
PH :9839029868.

FATEHABAD

1631. KTL PVT LTD (BLQ1-BLQ-01), KHASRA NO. 730/731, GRAM MAUJA, MADAYNA SIKRARA MODE, FATEHABAD, DISTRICT – AGRA, UTTAR PRADESH - 283111
PH :8449715063.

FATEHPUR

1632. KTL PVT. LTD. (2801-TM-04), NH-2, OPP. RTO OFFICE, KANPUR ROAD, FATEHPUR - 212601
PH :7408409304.

FEROZABAD

1633. MADHUSUDAN VEHICLES PRIVATE LTD (DF01-DF-01), 746, ALI NAGAR KEJRA , NEAR RAJA KA TAL CROSSING, NH 2, FEROZABAD - 283203
PH :05612-9690003035.

GAJRAULA

1634. AKANKSHA AUTOMOBILES PVT. LTD. (XD01-XD-01), JHANAKPURI OPPOSITE RELIANCE PETROL PUMP, DELHI ROAD, GAJRAULA - 244235
PH :9897069329.

GHAZIABAD

1635. CHIRAG AUTOMOBILES (5983-59-01), PLOT NO. B1, SECTOR-B3, TRONICA CITY, GHAZIABAD
PH :9999107841, 9997093422.

1636. KAP AUTOMOBILES PVT. LTD. (5981-59-01), D-BLOCK SHASHTRI NAGAR,HAPUR ROAD,GHAZIABAD
PH :2714143, 9210026200.
1637. REGENT AUTOLINKS (P) LTD (5902-59-01), A-10/9 INDUSTRIAL AREA, SITE NO 3, MEERUT ROAD, GHAZIABAD - 201001
PH :0120-2706034-37, 0120-4641900,911,904.
1638. ROHAN MOTORS LTD. (5904-59-01), 432 MUKAND NAGAR, G.T.ROAD, GHAZIABAD - 201001
PH :0120-4375182,4730717, 4730176, 4734218.
1639. ROHAN MOTORS (5904-59-02), PLOT NO.46, MEERUT-DELHI ROAD, MORTA, GHAZIABAD - 201102
PH :0120-9717388333,9971466644.
1640. T.R. SAWHNEY MOTORS PVT LTD (5905-59-01), PLOT N0. 96, RAJINDER NAGAR INDUSTRIAL AREA, MOHAN NAGAR, GHAZIABAD, DISTT. - GHAZIABAD, U.P. - 201007
PH :7503326561.

GHAZIPUR

1641. AGR AUTOMOBILES PVT. LTD. (8403-KT-03), RKBK PETROL PUMP, NEAR BANSI BAZAR, GAZIPUR - 2333001
PH :0542-2361136.

GONDA

1642. SMARTWHEELS PVT. LTD. (7201-FZ-07), JANKI NAGAR, OPP INDIAN OIL DEPOT, BAHRAICH ROAD, GONDA, UTTAR PRADESH, - 271001
PH :233598.

GORAKHPUR

1643. SMARTWHEELS PVT. LTD. (7201-72-01), MOHADDIPUR, (NEAR RAMGARH TAL), GORAKHPUR (U.P.) - 273012
PH :2200267, 3090906.
1644. SMARTWHEELS PVT. LTD. (7201-72-06), NEAR T B HOSPITAL, LACHCHIPUR, NEPAL ROAD, GORAKHPUR - 273012
PH :0551-3090906.
1645. SMARTWHEELS PVT. LTD. (7202-72-01), PLOT NO.AL-4, SECTOR-9, GIDA, GORAKHPUR. - 273209
PH :9235401004.

GREATER NOIDA

1646. ROHAN MOTORS LTD. (T201-T2-01), 63-A, UDYOG VIHAR, GREATER NOIDA, UTTER PRADESH - 201306
PH :0120-4513739,40,09,01, 2560564, 2569984-85, 3092597.

HAMIRPUR

1647. KTL LTD. (QH01-QH-01), VILLAGE RAMEDI,KANPUR ROAD, HAMIRPUR - 210301
PH :7408409304, 9235443403.

HAPUR

1648. ROHAN MOTORS (6G01-6G-01), DELHI-HAPUR ROAD, OPPOSITE SSV INTERCOLLEGE,HAPUR, DISTRICT- GHAZIABAD - 245101
PH :+11222313203.

HARDOI

1649. CONCEPT CARS PVT. LTD. (QE01-QE-01), NANAK GANJ, LUCKNOW ROAD, HARDOI - 241001
PH :9792971496.
1650. CONCEPT CARS PVT. LTD. (QE01-QE-04), PLOT NO. 1609 & 1605 GANGA BUX PURVA, BILGRAM ROAD, HARDOI KANPUR HIGHWAY, HARDOI, UTTAR PRADESH. - 241001
PH :7607005857.

HATHRAS

1651. DEV MOTORS (P) LTD (B601-LP-03), NEAR NAGLA UMMED, ALIGARH ROAD, HATHRAS - 204101
PH :9917435500.

JAGDISHPUR

1652. BRIGHT 4 WHEELS SALES PVT. LTD. (XC01-XC-01),
KATHORA,MUSAFIRKHANA,LUCKNOW SULTANPUR ROAD,JAGDISPUR-UTTAR PRADESH - 227817
PH :06438-9721526961 , 9628374814.

JAUNPUR

1653. KIRTIKUNJ AUTOMOBILES PVT. LTD. (6H01-6H-01), KHANPUR AKBAR, KUTTUPUR TIRAHA - 222001
PH :9554951026.

JHANSI

1654. SURI AUTOMOBILES (6001-60-01), 362/1 NEHRU MARG, CIVIL LINES, JHANSI - 284001
PH :330844.

KANNAUJ

1655. KTL PVT. LTD. (2801-EM-05), PLOT NO. - 377, AKBARPUR, KANNAUJ - 209725
PH :7408409304.

KANPUR

1656. KTL PVT. LTD. (2801-28-01), 9/46, BENAJHABAR ROAD, HARSH NAGAR, KANPUR - 208002
PH :0512-290459.
1657. KTL PVT. LTD. (2801-28-02), SHVAATRA KRISHNA NAGAR, G T ROAD, KANPUR - 208007
PH :0512-401390.
1658. MY CAR PVT. LTD. (2803-28-01), 84/54 C, JARIB CHOWKI ,G.T. ROAD, KANPUR - 208003
PH :0512-3988833.
1659. MY CAR PVT. LTD. (2803-28-02), C-16, SITE-1, PANKI INDUSTRIAL AREA, KANPUR - 208022
PH :0512-2691756.
1660. S B CARS PVT.LTD (2806-28-01), 77B , FAZALGANZ, KANPUR - 208012
PH :0512-2241660.
1661. MY CAR PVT. LTD. (2803-28-05), 88, BLOCK-T, FACTORY AREA, FAZALGANJ, KANPUR - 208004
PH :0512-3067601.
1662. S B CARS PVT.LTD (2806-28-05), 1/6-7 AMBEDKAR PURAM, AWAS VIKASH, KALYANPUR, KANPUR - 208017
PH :7408430365.

KAUSHAMBI

1663. GREENLAND MOTORS (AYA1-AYA-01), OPP. NAVEEN SAMITI MANDI STHAL, MANJHANPUR, KAUSAMBHI - 211001
PH :9919202043 , 9838107762.

KIRAOLI

1664. PREM MOTORS PVT. LTD. (BJZ1-BJZ-01), GOVIND PALACE, NEAR KIRAWALI TEHSIL, AGRA – JAIPUR HIGHWAY, KIRAWALI, DISTRICT – AGRA, UTTAR PRADESH. - 283122
PH :7055007646.

LAKHIMPUR

1665. SUMITRA DS MOTORS PVT LTD (W201-M3-02), GATA NO. 66, LRP ROAD, TOWARDS GOLA, LAKHIMPUR KHERI - 242001
PH :262583/4/5.

LALITPUR

1666. SURI AUTOMOBILES (6001-6J-03), JAHANSI SAGAR ROAD, LALITPUR - 284001
PH :9451496015.

LUCKNOW

1667. K M AUTOCRAFT (1381-13-01), 76/3, BARAURA, HUSSAIN BARI, HARDOI ROAD, LUCKNOW
PH :0522-2473369.
1668. ANAND MOTOR AGENCIES LTD. (1301-13-01), 11TH KMS, FAIZABAD ROAD, CHINHAT, LUCKNOW - 227105
PH :0522-315791, 315792, 315000, 7080000469.
1669. ANAND MOTOR AGENCIES LTD. (1301-13-02), 47, NEHRU ROAD, SADAR BAZAR, LUCKNOW - 226016
PH :0522-3098257, 7080000463.
1670. ANAND MOTOR AGENCIES LTD. (1301-13-04), G-3, LDA MARKET, ALIGANJ, LUCKNOW - 226024
PH :0522 - 4103406/407/408, 7080000464.
1671. BRIGHT 4 WHEEL SALES PVT. LTD. (1305-13-01), 11/CP- 6, VIKAS NAGAR, RING ROAD, LUCKNOW - 226022
PH :0522-2739501.
1672. KTL LIMITED (1302-13-02), MATIYARI CHAURAHA, CHINNHAT, FAIZABAD ROAD, LUCKNOW - 227105
PH :0522-315301.
1673. KTL LIMITED (1302-13-03), INDRA NAGAR, OPP. HALFAIZABAD ROAD, LUCKNOW, UTTAR PRADESH - 226016
PH :0522-2340183,86.
1674. KTL LIMITED (1302-13-04), BEHIND N S KOHLI PETROL PUMP, SARDARI KHEDA, KANPUR ROAD, ALAMBAGH, LUCKNOW - 226005
PH :9918451222.
1675. ONE UP MOTORS INDIA PVT. LTD. (1306-13-01), C-16A,TRANSPORT NAGAR,KANPUR ROAD, LUCKNOW, KANPUR ROAD, LUCKNOW - 226012
PH :9918100801.
1676. ONE UP MOTORS INDIA PVT. LTD. (1306-13-03), CHHANNILAL CROSSING, MANDIR MARG, LUCKNOW - 226005
PH :9839015046.
1677. BRIGHT 4 WHEEL SALES PVT. LTD. (1305-13-02), PARGANNA MOHANNA, STP ROAD, CHATMEEL, LUCKNOW - 226021
PH :9838075960.
1678. ONEUP MOTORS INDIA PVT. LTD. (1306-13-04), PLOT NO. 1/5, PATRAKARPURAM ROAD, VINEET KHAND, GOMTI NAGAR , LUCKNOW, UTTAR PRADESH - 226010
PH :0522-0522-4943666 , 9918100291.
1679. BRIGHT 4 WHEEL SALES PVT. LTD. (1305-13-05), PLOT NO. 68, BUTLER GANJ, BAALU ADDA, LUCKNOW. - 226001
PH :7705911825, 9838075929.

MADHOGANJ

1680. CONCEPT CARS PVT. LTD. (BHI1-BHI-01), KANPUR ROAD, NEAR RAILWAY CROSSING, MADHOGANJ DIST. HARDOI. - 241001
PH :7607696666.

MAHARAJGANJ

1681. SMARTWHEELS PVT. LTD. (EI01-EI-01), NEAR PHARENDA TAXI STAND, NAHAR ROAD, PIPAR DEORA, MAHARAJGANJ, DIST. MAHARAJGANJ, UTTAR PRADESH. - 273303
PH :05523-7705803113.

MAHMUDABAD

1682. CONCEPT CARS PVT. LTD. (AAN1-AAN-01), IN FRONT OF POWER HOUSE, SIDAULI ROAD, MAHMOODABAD (U.P.) - 261203
PH :05864-253893.

MAHOBA

1683. SURI AUTOMOBILES (6001-RM-02), NEAR PARMANAND CHOWK, GANDHINAGAR, MAHOBA, UTTAR PRADESH, - 284001
PH :5281-244344, 9451496015.

MAINPURI

1684. KULDEEP MOTORS (6E01-SG-02), SKP-4A, MAINPURI - 205001
PH :9235258444.

MALIHABAD

1685. ONE UP MOTORS INDIA PVT. LTD.
(BOD1-BOD-01), KHASRA NO. 326/1 AND 327, VILLAGE PARGANA, TEHSIL – MALIHABAD, DISTRICT – LUCKNOW, UTTAR PRADESH. - 227111
PH :9918100781.

MATHURA

1686. UMA MOTORS PVT. LTD. (H801-H8-01), 68, MAHOLI,NEAR JAI GURUDEV TEMPLE, NH-2, KM STONE 146, MATHURA - 281004
PH :0565-2463043/ 6290700.

MEERUT

1687. UNIQUE CAR SCANNERS (4881-48-01), PLOT NO:514/4, SURAJ KUND ROAD, MEERUT,
PH :9568001008.
1688. RAJ SNEH AUTO INDIA PVT LTD (4803-48-01), 210, DELHI ROAD, NEAR AMAR UJALA, MEERUT - 250001
PH :0121-2408038.
1689. RAJ SNEH AUTO INDIA PVT LTD (4803-48-02), GARH ROAD, OPP. PURI PETROL PUMP, MEERUT, UTTARPRADESH - 250003
PH :121-2408031-35.
1690. TANYA MOTORS (4802-48-01), 35 CHIPPI TANK, BEGUM BRIDGE ROAD, MEERUT - 250001
PH :0121-4020006, 648829.
1691. TANYA MOTORS (4802-48-03), 40, NAUCHANDI GROUND, MEERUT - 250001
PH :0121-4026208, 2658008, 09, 10.
1692. RAJSNEH AUTO INDIS PVT. LTD. (4803-48-05), NEAR TAKSHILA COLONY, OPP. MEDICAL COLLEGE, GARH ROAD, MEERUT - 250002
PH :9568007373, 9837581179.
1693. RAJ SNEH AUTO INDIA (P) LTD. (4803-48-06), OPP. KONARK COLONY, NEAR RAJMANDIR MANDAP, ROORKEE ROAD, MEERUT (U.P.) - 250002
PH :0121-2575787, 2575797.
1694. RADHA GOVIND AUTOMOBILES PVT. LTD. (4807-48-01), VILLAGE – BARAL, KUNDA GATE NEAR YOGI FARM HOUSE, PARTAPUR, DELHI ROAD, MEERUT. - 250002
PH :7456001001.

MIRZAPUR

1695. STAR CARS (6K02-6K-01), PILI KOTHI, STATION ROAD, MIRZAPUR, UTTAR PRADESH - 231001
PH :9450544961.

MODINAGAR

1696. MOTORCRAFT SALES PVT. LTD. (5903-M7-02), OPPOSITE SONIA ENCLAVE, ADJACENT SUMAN CINEMA, NH-58, MODINAGAR - 201204
PH :01232 -244001,9219444550.

MOHANLAL GANJ

1697. BRIGHT 4 WHEEL SALES PVT. LTD.
(BWU1-BWU-01), KHASARA PLOT NO.581, VILLAGE PURSANI, PARGANA AND TEHSIL MOHANLALGANJ, LUCKNOW DISTT., UTTAR PRADESH - 227305
PH :7571905966.

MORADABAD

1698. AKANKSHA AUTOMOBILES PVT. LTD.
(B401-B4-01), DELHI ROAD, 5TH.KM, MORADABAD (U.P.) - 244001
PH :0591-2485111,2480888, 2487722.
1699. AKANKSHA AUTOMOBILES PVT. LTD.
(B401-B4-03), 5TH KM DELHI ROAD, MORADABAD - 244001
PH :9219404041.
1700. AKANKSHA AUTOMOBILES PVT. LTD.
(B401-B4-04), KHASRA NO. 569-570, VILLAGE – KAJIPURA, KANT ROAD, MORADABAD, UTTAR PRADESH. - 244001
PH :7895600005.

MUZAFFARNAGAR

1701. RADHA GOVIND (H903-H9-01), NH -58 ,121 KM STONE, BY-PASS ROAD, NEAR TRANSPORT NAGAR, MUZAFFARNAGAR - 251001
PH :9412210301.

NAUGARH

1702. SMARTWHEELS PVT. LTD. (QG01-QG-01), NEAR PAKARI CHAURAHA, NAUGARH ROAD, SIDDHARTHNAGAR - 272205
PH :05544-211078.

NOIDA

1703. FAST TRACK AUTO CARE INDIA PVT. LTD. (A185-A1-01), A-13, SECTOR 63, NOIDA, G.B. NAGAR
PH :120-4581111/31.
1704. JKM MOTORS (A184-A1-01), A-25,SECTOR 9,DISTT. GAUTAM BUDH NAGAR,NOIDA
PH :0120-4052400.
1705. MOTORCRAFT INDIA PVT LTD (A181-A1-02), C-125,SECTOR-63,NOIDA,
PH :0120-2402671-72.
1706. MOTORCRAFT INDIA PVT LTD (A181-A1-01), F-8 & 9,SECTOR-8,NOIDA
PH :0120-5332222.
1707. FAIR DEAL CARS PVT. LTD. (A103-A1-01), D-39, SEC-10, NOIDA - 201301
PH :0120-4747300, 301.
1708. ROHAN MOTORS LTD. (A102-A1-01), C-8/9, SECTOR - I, NOIDA - 201301
PH :0120-4071900, 209,31,32,2529407, 2530535, 2539297, 2556663.
1709. ROHAN MOTORS LTD. (A102-A1-02), C-11, SECTOR-1, NOIDA, UTTAR PRADESH - 201301
PH :0120- 4071900, 209,31,32,.
1710. MOTORCRAFT SALES PVT. LTD. (5903-A1-03), D-39, SECTOR-10, NOIDA - 201301
PH :9818660777, 9810500000.
1711. VIPUL MOTORS LTD. (A101-A1-02), B-124 & B-125, SECTOR – 5, NOIDA, UTTAR PRADESH - 201301
PH :8800785532, 9818600000.
1712. VIPUL MOTORS PVT. LTD. (A106-A1-01), J-14, SECTOR-63, NOIDA, DISTT. GAUTAM BUDDH NAGAR (U.P.) - 201301
PH :0120-4758605.

ORAI

1713. S B CARS PVT.LTD (2806-LU-02), KANPUR ROAD, ORAI - 285001
PH :9307219303.

PILIBHIT

1714. CORAL MOTORS (P) LTD. (IL01-IL-01), BISALPUR ROAD, PILIBHIT, U.P. - 262001
PH :9837891846.

PRATAPGARH

1715. GREENLAND MOTORS (2903-NK-02), PITAI KA PURVA, JOGAPUR, ALLAHABAD ROAD, PRATAPGARH - 230001
PH :9838075757.

PURANPUR

1716. CORAL MOTORS (P) LTD. (CAD1-CAD-01), KHASRA NO. 768 & 770, VILLAGE – KHAMRIYA PATTI, PURANPUR – PILIBHIT ROAD, TEHSIL AND PARGANA – PURANPUR, DIST. PILIBHIT. - 262124
PH :05880-9837891846, 9927001120.

RAIBAREILLY

1717. KTL LIMITED (1302-HS-05), PLOT NO. 1550, GULLUPUR, P O KATWARA, HIJARCHANDRAPUR, RAIBAREILLY - 229303
PH :0532-937177411,415.

RAMNAGAR

1718. NAINITAL MOTORS PVT. LTD. (XM01-XM-01), BASAI, KASIPUR ROAD, RAMNAGER - 244137
PH :05947-282013.

RAMPUR

1719. AKANKSHA AUTOMOBILES PVT. LTD.
(B401-6L-02), JUDGES ROAD, RAMPUR, UTTAR PRADESH - 244901
PH :0595-9219415225.

RAYA

1720. UMA MOTORS PVT. LTD. (BXK1-BXK-01), CHAUDHARY PADAM SINGH MARKET, NEAR INDIA INTER COLLEGE, RAYA - MAANT ROAD, RAYA, DISTT. MATHURA (U.P.) - 281204
PH :9837204254.

SAHARANPUR

1721. ATELIER AUTOMOBILES PVT. LTD.
(S202-S2-01), NEAR BARI NAHAR, AMBALA ROAD, SAHARANPUR - 247001
PH :0173-2395001.

SAHIBABAD

1722. FAST TRACK SERVICES, (M981-M9-01), PLOT NO.40/1B/2, 3 & 4, SITE 4, INDUSTRIAL AREA, SAHIBABAD, DISTT. GHAZIABAD (U.P.).
PH :9560868111.
1723. FAIR DEAL CARS PVT. LTD. (08A5-M9-01), 12/67 SITE 4, INDUSTRIAL AREA,,SAHIBABAD, GHAZIABAD - 110095
PH :0120-4740409/102/436.
1724. MOTORCRAFT SALES PVT. LTD. (5903-M9-01), S-7 SITE-IV, SAHIBABAD INDUSTRIAL AREA, NEAR DABUR CHOWK, SAHIBABAD - 201010
PH :0120-4172222 / 4102222.
1725. T.R. SAWHNEY MOTORS PVT LTD (0819-M9-03), 28/1/1, SITE-IV, SAHIBABAD INDUSTRIAL AREA,DISTT- GHAZIHABAD, UTTAR PRADESH - 201010
PH :204753300, 9811020333.
1726. MARKETING TIMES AUTOMOBILES PVT LTD (0887-M9-02), PLOT NO. 509 & 511, WAZIRABAD LONI ROAD , OPP. SHALIMAR GARDEN, SAHIBABAD DISTT GHAZIABAD,U.P. - 201005
PH :9873298702,9818799910.

SAMBHAL

1727. AKANKSHA AUTOMOBILES PVT. LTD.
(BBP1-BBP-01), PLOT NO. 303, NEAR TAJ MILK FACTORY, MORADABAD SAMBHAL ROAD, SAMBHAL, UTTAR PRADESH - 244302
PH :0592-3232400.

SANDILA

1728. CONCEPT CARS PVT. LTD. (WY01-WY-01), NEAR PUNJAB NATIONAL BANK, LUCKNOW ROAD, SUMBABAGH, SANDILA - 241204
PH :05854-270001.

SHAHABAD

1729. CONCEPT CARS PVT. LTD. (AAX1-AAX-01), VILLAGE MUJAGADH, SHAHABAD - 241124
PH :9151783146.

SHAHJAHANPUR

1730. SUMITRA DS MOTORS PVT LTD (W201-W2-01), SITAPUR ROAD, NH-24, SHAHJAHANPUR - 242001
PH :05842-220333, 233909.

SHAMLI

1731. RADHA GOVIND AUTOMOBILES PVT. LTD. (XJ01-XJ-01), KHERI KARMU, OPPOSITE POWER HOUSE, PANIPAT-KAIRANA ROAD, SHAMLI UTTAR PRADESH - 247776
PH :1398-244571, 244572-73.

SHIKOHABAD

1732. MADHUSUDAN VEHICLES PRIVATE LTD.
(XH01-XH-01), 2508, KATRA MIRA,
MAHAMMABAD, OPP PROFESSOR COLONY, NH
2, BYE PASS ROAD, SHIKOHABAD, DISTT:
FIROZABAD,UTTAR PRADESH - 283203
PH :9.837097895E+019.

SITAPUR

1733. CONCEPT CARS PVT. LTD. (QE01-6M-02),
LUCKNOW-DELHI ROAD, NH-24, VILLAGE
JAMMAYAPUR, SITAPUR - 261001
PH :9161284000.

SULTANPUR

1734. KIRTIKUNJ AUTOMOBILES PVT. LTD.
(N101-N1-01), SHAURYAMAU, MIRANPUR,
VARANSI-LUCKNOW HIGHWAY, NH-56
(FAIZABAD BYPASS) SULTANPUR - 228001
PH :05362-227760 , 220107.

THAKURDWARA

1735. AKANKSHA AUTOMOBILES PVT. LTD.
(KO01-KO-01), 2 KM. MORADABAD ROAD, NEAR
JEETA KA DHABA, SAHAB GANJ (MUNSHI
GANJ), THAKURDWARA, DISTT. MBD. UTTAR
PRADESH - 244601
PH :7895980519.

UNCHAHAR

1736. KTL PVT. LTD. (1302-IH-06), ALLAHABAD
LUCKNOW ROAD, NEAR PURANA PETROL
PUMP, WARD NO. 5, SALON, UNCHAHAR,
DISTT: RAIBARELI - 229404
PH :9451133838.

UNNAO

1737. VISHAL WHEELERS PVT. LTD. (1382-KL-01),
PLOT NO. 1164, KANPUR-LUCKNOW BYE PASS,
UNNAO, UTTAR PRADESH,
PH :0515-2830610,2831248.

1738. S B CARS (2806-KL-04), HUSSAIN NAGAR
BYPASS,KANPUR-LUCKNOW HIGHWAY ROAD,
UNNAO,U.P. - 209801
PH :5153-9839811711,202445.

VARANASI

1739. PRATAP ENGINEERS (8481-84-01), S 2, 653/A-2,
CLUB ROAD, VARANASI
PH :0542-25100469, 9415203641.

1740. AGR AUTOMOBILES PVT. LTD. (8403-84-01),
B-38/2A, MAHMOORGANJ, GOPAL VIHAR,
VARANASI - 221010
PH :0542-2360436.

1741. VARANASI MOTORS PVT. LTD. (8402-84-01),
THE MALL, CANTONMENT, VARANASI - 221001
PH :0542-2509068, 2509069.

1742. VARANASI MOTORS PVT. LTD. (8402-84-03),
AARAJI NO.2 AND 48, G.T. ROAD, TODAPUR,
MOHANSARAI, RAJATALAB, VARANASI (U.P.) -
221002
PH :9838360662.

UTTARAKHAND

ALMORA

1743. NAINITAL MOTORS PVT. LTD. (J603-SQ-04),
PAWAR BHAWAN, JOSHI KHOLA RAJPURA,
PITHRAGARH ROAD, ALMORA - 263601
PH :9639016895.

BAGESHWAR

1744. NAINITAL MOTORS PVT. LTD. (J603-8I-05),
KAPKOT ROAD, BAGESHWAR. - 263642
PH :9927708822.

BAZPUR

1745. AKANKSHA AUTOMOBILE (RUDRAPUR) PVT.
LTD. (CGU1-CGU-01), KHASRA NO. 96/2,
VILLAGE – BHONA, ISLAM NAGAR, TEHSIL –
BAZPUR, UTTARAKHAND. - 262401
PH :9837278256.

CHAMPAWAT

1746. AKANKSHA AUTOMOBILES (RUDRAPUR) PVT.
LTD. (U403-SF-03), TANAKPUR LOHAGHAT
ROAD, CHAMPAWAT, UTTARAKHAND - 262523
PH :05965 - 230033.

DEHRADUN

1747. D.D. MOTORS (5704-57-01), 918/221, PATEL
NAGAR, INDUSTRIAL AREA, DEHRADUN
PH :0135-2745330, 31, 32.

1748. FUTURE AUTO WHEELS PVT.LTD (5706-57-01),
KHASRA NO. 8KHA, MOHABEWALA
INDUSTRIAL AREA, DEHRADUN, - 248001
PH :0129 -4271800.

1749. ROHAN MOTORS LTD. (5702-57-01), 130/1
CHAKRATA ROAD, YAMUNA COLONY,
DEHRADUN - 248001
PH :0135-2530955, 624519, 626097.

1750. ROHAN MOTORS LTD. (5702-57-02), 257/2, GMS
ROAD,,VILL. NIRANJANPUR, ADJ TO KAMLA
PALACE, DEHRADUN - 248001
PH :0135-2720342/43/44.

GOPESHWAR

1751. ROHAN MOTORS LTD. (5702-MV-03), CHOTA,
MANDAL ROAD, NEAR FOREST GATE,
GOPESHWAR - 131028
PH :01372-251572.

HALDWANI

1752. NAINITAL MOTORS PVT. LTD. (J603-J6-01),
VILLAGE JEETPUR NEGY, 5TH KM RAMPUR
ROAD, HALDWANI - 263139
PH :9639016895.

1753. NAINITAL MOTORS PVT. LTD. (J603-J6-02),
KALA DUNGI, NEAR ABDULLAH PETROL PUMP,
HALDWANI - 263139
PH :9639016895.

HARIDWAR

1754. SHAKUMBARI AUTOMOBILES (P) LTD
(6N02-6N-01), E-5/6, INDUSTRIAL AREA,
HARDWAR - 249407
PH :01334-310676, 321432.

KASHIPUR

1755. AKANKSHA AUTOMOBILES (RUDRAPUR) PVT.
LTD. (U403-DG-02), BAZPUR ROAD, KASHIPUR -
244713
PH :9219408725.

KHATIMA

1756. AKANKSHA AUTOMOBILES (RUDRAPUR) PVT.
LTD. (XL01-XL-01), VILLAGE: KHETAL SANDA
KHAM (SAL BHOJI NO.3, OPP. FOREST
CORPORATION) PILIBHIT ROAD,
KHATIMA,UDHAM SINGH NAGAR,
UTTARAKHAND - 262308
PH :8191000813.

KOTDWAR

1757. SHAKUMBARI AUTOMOBILES (P) LTD
(6N02-2I-02), PLOT NO.23 & 30 INDUSTRIAL
ESTATE, SITABPUR, KOTDWAR, DIS. PAURI
(GARHWAL), UTTRAKHAND - 249001
PH :8755998075,9927708822.

PITHORAGARH

1758. NAINITAL MOTORS PVT. LTD. (J603-NM-03),
VILLAGE PANDA, ODSAINI, DHARCHULA ROAD,
PITHORAGARH - 262501
PH :9639016895.

RANIKHET

1759. NAINITAL MOTORS PVT. LTD. (AXA1-AXA-01),
GANYADYOLI, NEAR DRUG FACTORY,
RANIKHET DISTT. ALMORA (UTTARAKHAND) -
263645
PH :05962-230254.

RISHIKESH

1760. FUTURE AUTO WHEELS (AAS1-AAS-01), 640,
LAXMAN JHULA ROAD, RISHIKESH. DISTT.
DEHRADUN, UTTARAKHAND - 249201
PH :0135-2432387.

ROORKEE

1761. SHAKUMBARI AUTOMOBILES (P) LTD
(H201-H2-01), 3RD KM STONE, DELHI-ROORKEE
HIGHWAY, NEAR IOC PETROL BUNK, ROORKEE
DISTT HARIDWAR - 247667
PH :01332-326160, 72267, 76216.

RUDRAPRAYAG

1762. ROHAN MOTORS (IK01-IK-01),
GULABRAI-BADRINATH ROAD, RUDRAPRAYAG
- 246171
PH :1364-233118.

RUDRAPUR

1763. AKANKSHA AUTOMOBILES (RUDRAPUR) PVT.
LTD. (U403-U4-01), KICHHA BYE PASS ROAD,
INDUSTRIAL AREA, RUDRAPUR - 263153
PH :05944-247203.

SITARGANJ

1764. AKANKSHA AUTOMOBILES (RUDRAPUR) PVT.
LTD. (CD01-CD-01), PLOT NO.228/5 AND 228/6
KHATIMA ROAD, SITARGANJ, DISTT -
RUDRAPUR, UTTARAKHAND. - 262405
PH :8192000375.

SRINAGAR

1765. SHAKUMBARI AUTOMOBILES (ANA1-ANA-01),
SRICOT GANAGANALI , NEAR MEDICAL
COLLEGE, PO- SRICOT, SRINAGAR - 246174
PH :1346-244571,244572-73.

TEHRI

1766. D.D. MOTORS (5704-SP-02), PLOT NO. 541,
SECTOR-8E, DISTT. - NEW TEHRI - 249001
PH :01376-233144.

WEST BENGAL

ALIPURDUAR

1767. PODDAR CAR WORLD PVT. LTD.
(BZO1-BZO-01), BIRPARA MORE, COOCH
BEHAR ROAD, BESIDE GOYENKA PETROL
PUMP, ALIPURDUAR, WEST BENGAL. - 736121
PH :03564-9800633338.

ASANSOL

1768. BEEKAY AUTO PVT LTD (F601-F6-01), CHANDA
MORE, N.H.-2, ASANSOL - 713301
PH :341-2344030/31/2343978, 9932049425.

BAHRAMPUR

1769. BEEKAY AUTO PVT LTD (T301-DJ-02),
BOKULTALA (PASCHIM GAMINI), NH-34,
BAHARAMPUR, DISTT. MURSHIDABAD. - 742101
PH :3482-267340.

BANKURA

1770. BHANDARI AUTOMOBILES LTD. (G701-6Q-02),
PLOT NO.-156, KH NO.-173, MITHILA MOUZA,
AT/PO-BANKURA (WB) - 722101
PH :34242-256766.

BARASAT

1771. PREMIER CAR WORLD PVT. LTD. (XZ03-XZ-01), R.S DAG NO. 512 AND PARTY IN DAG NO. 513, MOUZA-KHILKAPUR, P.O BARASAT, POLICE STATION: DUTTA PUKUR, TOUZI NO. 146, J.L NO. 4, DISTRICT – NORTH 24 PARGANAS, WEST BENGAL - 700125
PH :8420122407.

BARSUNDRA

1772. BHANDARI AUTOMOBILES PVT LTD (G701-BJW-05), PLOT NO. 610, BARSUNDARA, ISHWARDAHA, JALPAI, P.S. BHAWANIPUR, EAST MIDNAPORE. WEST BENGAL - 721654
PH :9933055539.

BARUIPUR

1773. ONE AUTO PVT LTD (ACA1-ACA-01), MAHENDRA NIKETAN, KHASH MALLICK, P.O. SOUTH GOBINDAPUR, P.S.- BARUIPUR, DISTT. SOUTH 24 PARGANAS, WEST KOLKATA (WEST BENGAL) - 700145
PH :8584018013.

BASIRHAT

1774. BHANDARI AUTOMOBILES LTD. (X701-0D-03), RAGHUNATHPUR, TALKI ROAD, BASIRHAT NR. INDIAN PERTOL PUMP, NORTH-24 PARGANAS. - 743428
PH :3217-249192, 249194.

BISHNUPUR

1775. BHANDARI AUTOMOBILES PVT. LTD. (AAG1-AAG-01), STATION ROAD, P.O+P.S-BISHNUPUR, DIST: BANKURA, WEST BENGAL - 722122
PH :9933055539.

BOLPUR

1776. SWG- (A UNIT OFSAI NATH AUTO LINKS PVT. LTD) (4402-TC-03), KABI JOYDEB ROAD, NEAR BOLPUR BY PASS, BOLPUR, DIST: BIRBHUM
PH :3463-252577, 252777.

BONGAON

1777. STARBURST MOTORS PVT LTD (TQ02-TQ-01), 376/D, R D B ROAD, NEAR JESSORE ROAD, BAKSHIPALLY, BONGAON, NORTH 24 PARGANAS, WEST BENGAL - 743235
PH :9874195451.

BUDGE BUDGE

1778. ONE AUTO PVT. LTD. (BAV1-BAV-01), MAHESH TALA, NEAR DAKGHAR KALIMANDIR, BUDGE BUDGE TRUNK ROAD, DAKGHAR, WARD NO. 22, POLICE STATION-MAHESHTALA, WEST BENGAL - 700141
PH :8335050357/8442830001.

BURDWAN

1779. BEEKAY AUTO PVT LTD (T301-T3-03), NH-2, PAMRA VILLAGE ROAD, CHANDNI MORE, SATTAR MILE, BURDWAN, WEST BENGAL - 713101
PH :033-9932049454.

C K ROAD

1780. BHANDARI AUTOMOBILES PVT. LTD. (D001-D0-01), P.O:SAT BANKURA, PS:GARBETA, CHANDRAKONA ROAD, DIST. PASCHIM MIDNAPORE, WEST BENGAL - 721252
PH :3222-9933055539.

CHAKDAHA

1781. BHANDARI AUTOMOBILES (OM01-OM-01), VILLAGE – PUMLIA, P.O. – CHAKDAHA, DISTRICT – NADIA, WEST BENGAL. - 741222
PH :9073940368, 9674735303, 9674169007.

CONTAI

1782. BHANDARI AUTOMOBILES LTD. (G701-GV-03), SERPUR BAMUNBAR,P O- MARISHDA, NEAR MECHEDA BYPASS, CONTAI, WEST BENGAL - 721401
PH :3220-254572.

COOCH BEHAR

1783. PODDAR CAR WORLD PVT. LTD. (BWZ1-BWZ-01), CHAKCHAKA, NEELKUTHI BAZAR, NEAR ADA FACTORY, NH-31, COOCH BEHAR, WEST BENGAL. - 736101
PH :03582-258567, 7031045594.

DARJEELING

1784. BEEKAY AUTO PVT LTD (4301-6U-05), MERRY VILLA, DARJEELING, DISTRICT-DARJEELING. - 734101
PH :354-9233539579.

DURGAPUR

1785. SWG- (A UNIT OFSAI NATH AUTO LINKS PVT. LTD) (4402-44-01), PLOT NO-743, MAUZA FRIDPUR, BURDWAN, DURGAPUR - 713213
PH :343-2547777, 9233500277.

GHATAL

1786. BHANDARI AUTOMOBILES (AAD1-AAD-01), VILL. NIMTOLA, P.O. & P.S. DASPUR, GHATAL,WEST MIDNAPORE,WEST BENGAL - 721211
PH :9933055539.

GOPIBALLAVPUR

1787. BHANDARI AUTOMOBILES PVT. LTD. (BPQ1-BPQ-01), JL NO. 1103, KHATIAN NO. 1103, PLOT NO. 438, VILLAGE + P.O. + P.S. – GOPIBALLVPUR , MOUZA – GOPIBALLVPUR, WEST MIDNAPUR, WEST BENGAL. - 721506
PH :9933055539, 8170018577.

HALDIA

1788. BHANDARI AUTOMOBILES LTD. (G701-SE-04), BALGHASIPUR, BHABANIPUR, PURBA MEDIANPUR, HALDIA - 721657
PH :3224-8016082344, 9233502421.

HOWRAH

1789. BHANDARI AUTOMOBILES LTD. (X701-X7-01), BANKRA THANA,DOMJUR,HOWRAH. - 711403
PH :33-66137528/18/06.

JALPAIGURI

1790. PODDAR CAR WORLD PVT. LTD. (XY01-XY-01), COLLEGE PARA, SIRISHTALA, NEAR ASSAM MORE, JALPAIGURI, WEST BENGAL. - 735101
PH :03561-257155, 257066, 8945534921.

JHARGRAM

1791. BHANDARI AUTOMOBILES PVT. LTD. (BUG1-BUG-01), DAG NO.383, KHATAN NO. JL396, WARD NO.11, RAJBATI CAMPUS, JHARGRAM, WEST BENGAL - 721507
PH :8016087297, 9933055539.

KALNA

1792. BEEKAY AUTO PVT LTD (WZ01-WZ-01), KALNA ROAD, NEAR KALNA SUB DIVISIONAL HOSPITAL, KALNA, PO+PS: KALNA, DISTT. BURDWAN, (W.B.) - 713409
PH :9932251483.

KALYANI

1793. STARBURST MOTORS PVT LTD (IJ01-IJ-01), KALYANI INDUSTRIAL GROWTH CENTRE, PHASE-III, A-5 (OPP. U I C UDYOG, NEAR: J I S COLLEGE), KALYANI. - 741234
PH :033-25824139/25824140.

KESHPUR

1794. BHANDARI AUTOMOBILES (CCM1-CCM-01), JL NO. 338, KHATIAN NO. 786/2, PLOT NO. 1749, MOUZA – KESHPUR, VILLAGE + P.O. + P.S. – KESHPUR, WEST MIDNAPUR, WEST BENGAL. - 721150
PH :721150, 8170014289.

KHARAGPUR

1795. BHANDARI AUTOMOBILES LTD. (G701-G7-01), BHANDARI BUILDING, JHAPATAPUR, KHARAGPUR, WEST BENGAL - 721301
PH :3222-755537.

KOLKATA

1796. MANOCO SALES (P) LTD. (0681-06-01), 25/1, CHETLA CENTRAL ROAD, OPPOSITE CHETLA PARK, KOLKATA
PH :33-24568326, 24486568, 24568325.

1797. AUTO HITECH PRIVATE LIMITED (0604-06-01), 34-A, C.N. ROY ROAD, KOLKATA - 700039
PH :33-40218200,8231/8222/8262.

1798. DEWAR'S GARAGE (0605-06-01), (PROP. DELTA INTERNATIONAL LTD.), 14 BRITISH INDIAN STREET, CALCUTTA - 700069
PH :33-2483397 (NA).

1799. MACHINO TECHNO SALES LTD. (0601-06-01), 21/1 DARGA ROAD, (PARK CIRCUS), CALCUTTA - 700017
PH :33-30285317/18/16/12/15,08272981466.

1800. MACHINO TECHNO SALES LTD. (0601-06-02), 48 A, TARATALA ROAD, KOLKATA - 700066
PH :33-24913755, 24913993.

1801. PREMIER CARWORLD PVT. LTD. (0611-06-01), AGARPARA JUTE MILL, 28-B.T.ROAD, P.O.: -KAMARHATI, DISTT.-KOLKATA - 700058
PH :33-66065555/25235910.

1802. BHANDARI AUTOMOBILES PVT. LTD. (0609-06-02), 37, GULAM JILANI KHAN ROAD, KOLKATA. - 700039
PH :033-9903850402/9830044089.

1803. SANEI MOTORS PVT LTD (0612-06-01), 16/2 CANAL EAST ROAD, NEAR MANIKTALA POLICE STATION,KOLKATA - 700067
PH :033-30103043.

1804. ONE AUTO PVT LTD (0614-06-02), 62 EAST TOPSIA ROAD, P.S. TILJALA, ARUPOTA, KOLKATA , WEST BENGAL - 700105
PH :033-8442830001.

1805. ONE AUTO PVT LTD (0614-06-01), JL NO.3, MOUZA-JAGADIPOTA, P.S:SONARPUR, KHEYADAHA NO.2, GRAM PANCHAYAT, DISTT. SOUTH 24 PARGANAS. - 700099
PH :8442830001.

1806. DEWAR'S GARAGE (0605-06-03), P-27/2, TARATALA ROAD, KOLKATA - 700088
PH :033-24010011, 8584015273.

1807. SANEI MOTORS PVT LTD (0612-06-02), 235, HATIYARA ROAD, SITALATALA, BAGUIATI, KOLKATA, WEST BENGAL - 700059
PH :8584050184, 958405071.

1808. OSL MOTOCORP PVT. LTD. (0616-06-01), 49 DEBENDRA CHANDRA DEY ROAD, LANE BESIDE SILVER SPRING CLUB, E.M. BYE-PASS, KOLKATA - 700015
PH :3369466946, 08697982283.

KRISHNANAGAR

1809. BHANDARI AUTOMOBILES LTD. (X701-GS-02), PLOT NO.-1874, MOUZA-GOBINDSARAK,J.K. NO. 94, PS-KOTWAL,OLD WARD NO. 20, LAL MOHAN GHOSH ROAD, KRISHNANAGAR - 742011
PH :3472-223587.

MADHYAMGRAM

1810. STARBURST MOTORS PVT LTD (BXJ1-BXJ-01), 9/1, HEMANTA BOSE SARANI, BASUNAGAR, NEAR DEAF & DUMB SCHOOL, UDAYRAJPUR, MADHYAMGRAM - 700129
PH :9830130265.

MAHESHTALA

1811. BHANDARI AUTOMOBILES (0609-06-01), BUDGE BUDGE TRUNK ROAD, NEW GOPALPUR, SARKARPOOL, MAHESHTALA, DISTT. SOUTH 24 PARGANAS, WEST BENGAL - 700143
PH :033-64995331/2.

MALDA

1812. J.K. WHEELS PVT LTD (L801-L8-01), GABGACHHI, N.H. 34, MALDA, - 732103
PH :3512-258884, 266379.

NAIHATI

1813. PREMIER CAR WORLD PVT. LTD. (YD01-YD-01), P.O. BHATPARA, GRAM-MUKTARPUR, P.S. - JAGATDAL, DIST-24 PGS (N), NAIHATI (WB) - 743123
PH :8420122451.

PURULIA

1814. SWG- (A UNIT OFSAI NATH AUTO LINKS PVT. LTD) (4402-6W-02), PO. LAKDA, VILLAGE-DADKA , ON RANCHI ROAD, PURULIA - 723149
PH :3252-242100.

RANAGHAT

1815. STARBURST MOTORS PVT LTD (BBW1-BBW-01), THANA: GANGNAPUR, ADSR OFFICE, 151 NO.MOUZA PATULI, PLOT NO.309, RANAGHAT, DISTT: NADIA - 741238
PH :8584040215, 8336933447.

SEORI

1816. BEEKAY AUTO PVT LTD (F601-KC-02), RAMBADANPUR, NEAR SP MORE, DIST-BIRBHUM, SEORI - 731101
PH :3462-259055 / 9233503153.

SILIGURI

1817. BEEKAY AUTO PVT LTD (4301-43-01), NH-31, P.O. MATIGARA,SILIGURI. - 734428
PH :353-2002254, 6533554.

1818. BEEKAY AUTO PVT LTD (4301-43-04), AMAI DIGHI, PHOOL BARI,STATE HIGHWAY -12, SILIGURI - 734001
PH :353-2568592, '9932049347.

1819. SEVOKE MOTORS PVT. LTD. (4302-43-01), 233, SEVOKE ROAD,2ND MILE, SILIGURI - 734001
PH :353-2545309/12/13.

SREERAMPORE (SREERAMPUR)

1820. BHANDARI AUTOMOBILES (BBT1-BBT-01), BANGIHATI (MADPUR) DELHI ROAD, SREERAMPUR, DISTT: HOOGHLY, WB - 712203
PH :33-66137505, 66137585, 9674741544.

TAMLUK

1821. BHANDARI AUTOMOBILES PVT. LTD. (OL01-OL-01), MOUZA PADUMBASAN, WARD NO 10, JL NO:144, DISTT: EAST MIDNAPUR, WEST BENGAL - 721636
PH :9933055539.

TARAKESHWAR

1822. SANEI MOTORS (YH01-YH-01), MOUZA BAIDYAPUR, UNDER BALIGORI(1), GRAM PANCHAYET, TARAKESHWAR, DISTT. HOOGLY, WEST BENGAL.
PH :9836872710.

ULUBERIA

1823. BHANDARI AUTOMOBILES (2401-24-01), HOLDING 1242A, BANITABLA, P.O+P.S: ULUBERIA, NH-6, DISTT: HOWRAH, WEST BENGAL - 711316
PH :8336070344.

DELHI

DELHI

1. J.J IMPEX (MARUTI SERVICE MASTERS) (0883-08-03), PLOT NO. 9, SSI INDUSTRIAL ESTATE,G.T. KARNAL ROAD, OPP JAHANGIR PURI,NEAR KDR WOOL FACTORY,DELHI - 110033
   PH :011-40715500, 40715501.
2. J.J IMPEX (MARUTI SERVICE MASTERS) (0883-08-01), F-39,OKHLA INDUSTRIAL AREA,PHASE-II,NEW DELHI - 110020
   PH :011-41612194, 40685500.
3. MARUTI SALES & SERVICE(DELHI) (0810-08-01), C-119, INDUSTRIAL AREA PHASE-I, NARAINA, NEW DELHI - 110028
   PH :011-45541113.

TAMIL NADU

CHENNAI

4. J.J IMPEX (MARUTI SERVICE MASTERS) (1485-14-01), # 9, (SP),THIRU-VI-KA INDUSTRIAL ESTATE, GUINDY, CHENNAI - 600032
   PH :044-43563366, 43563367.

ANDHRA PRADESH

TIRUPATI

1. KOUNDINYA ENTERPRISES (N981-N9-01), 18-3-60,KT BY PASS ROAD,,TIRUPATI - 517501
PH :0877- 2233051, 2231047.

ARUNACHAL PRADESH

ITANAGAR

2. HIBRO AUTOMOBILES (7581-75-01), D-SECTOR, DISTT: PAPUMPARE, ITANAGAR - 791111
PH :0360-2212843.

ASSAM

BARPETA

3. ROY AUTO ENGINEERING WORKS (7Z81-7Z-01), POST OFFICE, BARPETA ROAD, MAIN ROAD , WARD NO.-4, ASSAM - 781315
PH :03666-260343, 262743.

DULIAJAN

4. B.S. MOTORS (X881-X8-01), NO. 01, BORPOTHAR TINALI, DULIAJAN. - 786602
PH :0374-2801255.

BIHAR

PATNA

5. CITY AUTO SERVICES (1582-15-01), 9/1, PATLIPUTRA INDUSTRIAL ESTATE, PATLIPUTRA , PATNA - 800013
PH :0612-2265916, 9334115900.

CHHATTISGARH

RAIGARH

6. SHAKTI AUTOMOBILES (7Y81-7Y-01), ORRISSA ROAD, KABIR CHOWK, BANJHIPALI, RAIGARH, C.GARH - 496001
PH :9300006496.

DELHI

DELHI

7. A M AUTOMOBILES (A UNIT OF BLUE BIRD ENTERPRISES) (0891-08-01), 189-91, ,LAWRANCE ROAD,,DELHI - 110035
PH :011-48280000.
8. GALAXY AUTOMOBILES (0881-08-01), 8 INDUSTRIAL AREA,TILAK NAGAR,NEW DELHI, - 110018
PH :011-43276666.

HARYANA

BALLABGARH

9. ROYAL MOTORS (9R81-9R-01), 21/5, G.T. ROAD, BALLABHGARD, DISTT-FARIDABAD - 121004
PH :0129-4271800, 9899242536, 2242536.

MURTHAL

10. MURTHAL AUTO PVT. LTD. (BV81-BV-01), 44 HSIIDC, MURTHAL - 131027
PH :0130-2482230.

PANCHKULA

11. CARE TAKER (K381-K3-01), PLOT NO. 36, INDUSTRIAL AREA, PHASE-2, PANCHKULA - 134113
PH :0172-2592310, 2594310, 5064336.

PANIPAT

12. VIJAY MOTORS (D381-D3-01), PLOT# 136, INDUSTRIAL AREA, PHASE-1 - 132103
PH :180-4001490.

SAHA

13. PUNJAB MOTOR & ENGG WORKS (1881-18-01), NH-73, SHAHZADPUR ROAD, SAHA, DISTT.-AMBALA - 133104
PH :0171-2822669, 9896402469.

YAMUNANAGAR

14. HIRA MOTOR GARAGE (D281-D2-01), PLOT NO 46, SHIVAJI PARK, OPPOSITE MADHU PALACE, YAMUNANAGAR, HARYANA - 135001
PH :1732-261937.

HIMACHAL PRADESH

JASSUR

15. CLASSIC MOTOR GARAGE (8H81-8H-01), TEHSEEL NOOPUR, KANGRA, JASSUR, HIMACHAL PRADESH - 176201
PH :01893-226555.

JAMMU & KASHMIR

SRINAGAR

16. RAHIM MOTORS (1281-12-01), SIDGO INDUSTRIAL AREA, RANGRETH, SRINAGAR - 2441384
PH :0194-2435909.

JHARKHAND

RANCHI

17. PODDAR MOTOR (P) LTD. (5181-51-01), 47, 48 , KOKAR INDUSTRIAL AREA, RANCHI. - 834001
PH :0651-2544661, 2542650.

KERALA

ERNAKULAM

18. AUTOTEAM SALES & SERVICES PVT.LTD (2781-27-01), PIPELINE ROAD, PADIVATTOM, COCHIN, ERNAKULAM, COCHIN - 682024
PH :9847521112.

KOTTARAKARA

19. CHITHIRA AUTOMOBILES (C781-S8-01), RAILWAY STATION JUNCTION ,KOTTARAKARA - 691506
PH :0474-9447711001.

PATHNAMTHITTA

20. AGT MOTORS (W881-W8-01), AGT TOWERS, PUTHENPEEDI, OMALLUR, PATHANAMTHITTA - 689640
PH :0468-9288117477.

MADHYA PRADESH

NEEMUCH

21. AUTO SCAN (3T81-3T-01), MHOW ROAD,NEEMUCH,MADHYAPRADESH, - 454775
PH :07423-221912.

MAHARASHTRA

AHMEDNAGAR

22. VIJAY AUTOMOBILES (A581-A5-01), OPP. MSEB SUB STATION, NAGAR-PUNE ROAD, KEDGAON, AHMEDNAGAR - 414005
PH :0241-2550049.

PUNE

23. MARUTI CARE POINT (1981-19-02), 17/1, RAHATANI, AUNDH-CHINCHWAD ROAD. OPP PCMC 'D' PRABHAG KARYALAY, NEXT TO HP SUBHIKA PETROL PUMP, RAHATNI, PUNE, MAHARASHTRA - 411017
PH :020-65001981.

THANE

24. THANAWALA MOTOR AGENCY (P) LTD (3981-39-01), B-31, OPPOSITE ITI,WAGLE ESTATE MAIN ROAD,WAGLE ESTATE,THANE - 400007
PH :022-25872222.

ORISSA

KEONJHAR

25. KUMAR AUTOMOBILES (7U81-7U-01), DHRUPADA, KEONJHAR, ORISSA - 758001
PH :06766-256466.

PUNJAB

BATALA

26. CITI AUTOMOBILES (V581-V5-01), NEAR GURUDWARA ACHAL SAHIB, PATHANKOT JALANDHAR ROAD, BATALA, - 143505
PH :01871-98724024253.

MOGA

27. SM AUTO CARE CENTRE (H681-H6-01), OOP. ITI , G.T. ROAD, MOGA - 142001
PH :1636-226807.

RAJASTHAN

JAIPUR

28. KATARIA AUTOMOBILES (1181-11-01), 1-A ; NARAYANPURI,KATARIA KRISHI FARM,SIRSI ROAD,JAIPUR - 302034
PH :141-2471740/2471014 /2471406.

TELANGANA

HYDERABAD

29. RETOUCH (1082-10-01), H.NO. 3-67/A, B, C, D,NEW NAGOLE COLONY,NAGOLE VILLAGE, HYDERABAD,NAGOLE, HYDERABAD - 500068
PH :040-9848062263.

UTTAR PRADESH

AGRA

30. PRIME MOTORS (6681-66-01), 8B/7D, BYE PASS ROAD, DEV NAGAR, AGRA - 282007
PH :0562-2531881, 2531882.

ALIGARH

31. VINEET MOTORS (MSZ) (B681-B6-02), PLOT NO.D-138 &139, SECTOR-1, TALA NAGARI, RAMGHAT ROAD, ALIGARH - 202001
PH :9917473052, 9582123586.

BULANDSEHAR

32. SK & COMPANY (M581-M5-02), KHASRA NO. 2261, NEAR T POINT , BY PASS SHIKARPUR ROAD , BULANDSHAHR. - 203395
PH :05732-235400.

GHAZIABAD

33. CHIRAG AUTOMOBILES (5983-59-01), PLOT NO. B1, SECTOR-B3, TRONICA CITY, GHAZIABAD - 201102
PH :9999107841, 9997093422.
34. KAP AUTOMOBILES PVT. LTD. (5981-59-01), D-BLOCK SHASHTRI NAGAR,HAPUR ROAD,GHAZIABAD - 201002
PH :2714143, 9210026200.

LUCKNOW

35. K M AUTOCRAFT (1381-13-01), 76/3, BARAURA, HUSSAIN BARI, HARDOI ROAD, LUCKNOW - 226003
PH :0522-2473369.

MEERUT

36. UNIQUE CAR SCANNERS (4881-48-01), PLOT NO:514/4, SURAJ KUND ROAD, MEERUT, - 250001
PH :9568001008.

NOIDA

37. FAST TRACK AUTO CARE INDIA PVT. LTD. (A185-A1-01), A-13, SECTOR 63, NOIDA, G.B. NAGAR - 201301
PH :120-4581111/31.
38. JKM MOTORS (A184-A1-01), A-25,SECTOR 9,DISTT. GAUTAM BUDH NAGAR,NOIDA - 201301
PH :0120-4052400.
39. MOTORCRAFT INDIA PVT LTD (A181-A1-02), C-125,SECTOR-63,NOIDA, - 201301
PH :0120-2402671-72.

40. MOTORCRAFT INDIA PVT LTD (A181-A1-01), F-8 & 9,SECTOR-8,NOIDA - 201301
PH :0120-5332222.

SAHIBABAD

41. FAST TRACK SERVICES, (M981-M9-01), PLOT NO.40/1B/2, 3 & 4, SITE 4, INDUSTRIAL AREA, SAHIBABAD, DISTT. GHAZIABAD (U.P.). - 201010
PH :9560868111.

UNNAO

42. VISHAL WHEELERS PVT. LTD. (1382-KL-01), PLOT NO. 1164, KANPUR-LUCKNOW BYE PASS, UNNAO, UTTAR PRADESH, - 209801
PH :0515-2830610, 2831248.

VARANASI

43. PRATAP ENGINEERS (8481-84-01), S 2, 653/A-2, CLUB ROAD, VARANASI - 221002
PH :0542-25100469, 9415203641.

WEST BENGAL

KOLKATA

44. MANOCO SALES (P) LTD. (0681-06-01), 25/1, CHETLA CENTRAL ROAD, OPPOSITE CHETLA PARK, KOLKATA - 700027
PH :33-24568326, 24486568, 24568325.

ANDHRA PRADESH

ADILABAD

1.## MAHA LAXMI AUTOMOTIVES (2240), NH# 7 OPP. H.P. PETROL BUNK,TIRUPALLY,ADILABAD,(A.P.) PIN-504001 PH :08732-9000345313.

AMALAPURAM

2.## MARUTI MOTORS (3825), ONGC BY PASS ROAD,AMALAPURAM,E G DISTRICT (A.P.) PIN-533201 PH :08856-236156/235789.

ANANTAPUR

3.** GOWRI AUTO. & ENGG. WORKS (2621), PATEL ROAD,ANANTHAPUR (A.P) PIN-515001 PH :-8554274675.

ARMOOR

4.## HYDERABAD MARUTI MOTORS (4932), PLOT NO. 6,BESIDE THAKUR BEEDI FACTORY,ARMOOR,DISTRICT-NIZAMABAD (ANDHRA PRADESH) PIN-503224 PH :-9848205619.

BHADRACHALAM

5.## SRI VENKATARAMANA AUTO CARE (2831), MARUTI SERVICE STATION,OPP. COLLEGE GROUNDS,GOLLAGATTA ROAD,BHADRACHALAM (A.P.) PIN-507111 PH :-9290792269.

CUDDAPPAH

6.## SREE VENKATESWARA AUTO. (1030), SANKARA PURAM,CUDDAPAH (A.P.) PIN-516001 PH :-9440708234/9440223461.

7.## SIVAJI MOTORS (3275), BESIDES PADMASHALI KALYANA MANDAPAM,MADRAS ROAD,KADAPA,ANDHRA PRADESH PIN-516002 PH :08562-9849113189.

GAJWEL

8.# VIJAY MOTORS (4864), HYDERAAD ROAD,STATE HIGH WAY FROM HYDERABAD,TO KARIMNAGAR, PREGHAPUR - GAJWL,ANDHRA PRADESH PIN-502278 PH :-9849883665, 08454233028.

GUNTAKAL

9.## S. MAHABOOB AUTOMOBILES (4075), ALUR ROAD,GUNTAKAL PIN-515802 PH :-94402-08312/9963344109/924748109.

GUNTUR

10.## S. S. MOTORS (4946), OPP. JKC COLLEGE,JKC COLLEGE ROAD,GUNTUR,ANDHRA PRADESH PIN-522006 PH :-9848273503/9395553636.

HYDERABAD

11.## COSMO AUTO CLINIC PVT. LTD. (1045), 1-2-605/A/3 & 6,LOWER TANK BUND ROAD,NEAR INDIA PARK NORTH GATE,HYDERABAD PIN-500380 PH :-9849015667, 92462 75661.

12.## PISTONS & SPANNERS (2766), 2-3-37 MAHARANA PRATAP FUNCTION HALL,AMBERPET,HYDERABAD PIN-500013 PH :040-6585480/9990649504.

13.## ARYAN MOTORS (3264), D.NO.17-1-382/K/5 & 6,CHAMPAPET SAIDABAD,SAGAR ROAD,HYDERABAD PIN-500011 PH :040-24077459/9246155464.

14.* BHARAT MOTORS (3574), 1-90/7,BEHIND SUPRABHAT HOTEL,HABSIGUDA "X" ROAD,HYDERABAD PIN-500007 PH :040-9849447759.

15.## NEW TECHNOCRATS AUTO SERVICES (4477), 1-2-607/23/1/C,AMBEDKAR NAGAR,INDIRA PARK ROAD,HYDERABAD (ANDHRA PRAESH) PIN-500029 PH :040-9948039515.

16.## SERWELL AUTOMOBILES (5234), PLOT NO 202.203.ADITYA NAGAR .OPP,JNTU, KUKATPALLY HYDERABAD,ANDHRA PRADESH PIN-500072 PH :-9490105147.

JAGTIAL

17.## PARAMESHWARA MOTORS (3851), OPP P R OFFICE,DHAROOR CAMP,JAGTIAL,DT. KARIMNAGAR (A.P.) PIN-505327 PH :08722-9912664659.

KAKINADA

18.## SATISH AUTO CARE (5038), BEHIND KALPANA THEATRE,BEACH ROAD KAKINADA,DISTRICT EAST GODAVARI,ANDHRA PRADESH PIN-533001 PH :0884-2378198, 9848313599.

19.## SRI SHIRDI SAI TECHNOCRAFTS (1459), COMPUTERISED CAR CARE CENTRE,NAGAMALLI THATA COLONY,KAKINADA PIN-533003 PH :-9440727211.

KARIMNAGAR

20.** PUSHPAK MOTORS (1032), KOTHI RAMPUR,HYDERABAD ROAD,KARIMNAGAR (A.P) PIN-505001 PH :0878-9849163796, 9480035617.

21.## MYTRI MOTORS (5152), 8-6 188.KOTHI RAMPUR,KARIMNAGAR,DISTRICT - KARIMNAGAR,ANDHRA PRADESH PIN-505001 PH :-9441475357.

KAVALI

22.## KAMAL MOTORS (3842), 10-15-43/J3A OPP LIC,TANK RAOD,KAVALI PIN-524201 PH :08626-8801444888.

KHAMMAM

23.## EXCEL AUTO CARE (1043), 10-2-57/1,MAYURI CENTRE,KHAMMAM PIN-507001 PH :08742-9848156363.

KODAD

24.# SAI KAKATIYA SERVICE STATION (4664), SURYAPETA ROAD,OPPOSITE LORRY ASSOCIATION BUILDING,KODAD,DISTRICT-NALGONDA (ANDHRA PRADESH) PIN-508206 PH :-9848057813 ,9912616759.

KURNOOL

25.# SRINIWAS AUTO GARAGE (5170), KALLUR ROAD,KURNOOL,DISTRICT - KURNOOL,ANDHRA PRADESH PIN-518003 PH :-9440244660, 8186816828.

MACHILIPATNAM

26.## SRI MARUTI MECHANICAL WORKS (4172), OPP BEL COMPANY,DOOR NO. 17/541,MACHILIPATNAM,ANDARA PRADESH PIN-521001 PH :0867-9440538012.

MAHABUB NAGAR

27.## SRI AYYAPPA MARUTI CLINIC (3941), OPP HOSPITAL,HYDERABAD ROAD,YEMUGONDA,MAHABUB NAGAR (ANDHRA PRADESH) PIN-509001 PH :08542-271827/9440569259.

MANCHERIAL

28.## PARVATI MOTORS (4129), 4-53 BPL ROAD,MANCHERIAL,DISTRICT ADILABAD,ANDHRA PRADESH PIN-504208 PH :08736-9885554888.

MANDAPETA

29.# MODERN MARUTI CARE (4866), D.NO. 4-1-59/2, MAIN ROAD,MANDAPETA,DISTRICT-EAST GODAVARI,ANDHRA PRADESH PIN-533309 PH :08855-231839, 233664, 9849198494.

MATHURAWADA

30.# ANY TIME SERVICE CENTRE (4860), BESIDE ELECTRICAL SUBSATION,MADHURAWADA,DISTRICT VISAKHAPATNAM,ANDHRA PRADESH PIN-530041 PH :-9440160426.

MIRYALGUDA

31.## GANESH MOTORS (4536), D.NO. 6-366, P.V. COMPLEX,NALGONDA ROAD,MIRYALGUDA,NALGONDA DISTT (ANDHRA PRADESH) PIN-508207 PH :-9441090870.

NAGARI

32.# PUJITHA SERVICE CENTER (5872), TIRUPATI ROAD,NAGARI,DISTRICT-CHITTOOR,ANDHRA PRADESH PIN-517583 PH :-9849441079.

NANDYAL

33.## MARUTI MOTORS (2635), 26-130 OPP. GOVT. DEGREE COLLEGE,KURNOOL ROAD,NANDYAL PIN-518501 PH :08514-48765/9249299822/9440554167.

NELLORE

34.## MARUTI AUTO SERVICE STN. (2620), 16/796 SANKARA AGRAHARAM,NELLORE (A.P) PIN-524001 PH :0861-9246599268.

35.** MARUTI MOTORS (176), 16/1051 POGATHOTA,(NEAR RAGHAVA CINE COMPLEX),NELLORE,(A.P.) PIN-524001 PH :-9440278243.

NIZAMABAD

36.## PRIYA SERVICING (1771), C/O TIRUMALA CHITRA MANDIR,HOUSE NO.1-9-833,PHULANG ROAD,NIZAMABAD (A.P.)PIN-503003 PH :08462-9848071208.

PATTIKONDA

37.# ROYAL MOTORS (5776), ADONI ARTS & SCIENCE,COLLEGE ROAD ADONI, PATTIKONDA-518302,DISTRICT-KURNOOL,ANDHRA PRADESH PIN-518302 PH :-9866362847.

** A-Category Mass : Free & paid Service, Major repairs & Accidental repairs

C-Category Mass : Free & paid Service & Minor repairs

* B-Category Mass : Free & paid Service & Major repairs

D-Category Mass : Free Service & Minor repairs

PRODDATTUR

38.## SRI RAM MOTORS (3642), 189 INDUSTRIAL AREA,NEAR SRI LAKSMI NAGAR,MYDUKUR ROAD,PRODDATUR (A.P.) PIN-516360 PH :08564-9666890525.

RAJAHMUNDRY

39.## MARUTHI MOTORS (1257), D.NO.6-3-10 CHALLAPALLIVARI STREET,T. NAGAR,RAJAHMUNDRY PIN-533101 PH :-9848253434.

RAMAGUNDAM

40.## ALI AUTOMOBILES (2849), NEAR TV RELAY STATION,NTPC JYOTHINAGAR,RAMAGUNDAM,DISTT. KARIMNAGAR (AP) PIN-505215 PH :-9848219102.

SECUNDERABAD

41.## ANNAPURNA MOTORS (2947), # 6-3-23/5 JAYANAGAR COLONY,NEAR MEKALMANDI,NEW BHOIGUDA,SECUNDERABAD PIN-500080 PH :040-9849061136.

SIDDIPET

42.* POOJA MOTORS (4076), 19/180 KARIMNAGAR ROAD,G.P. PRASANTH ROAD,SIDDIPET,DISTRICT MEDAK (AP) PIN-502103 PH :08457-9885551518.

SIRSILLA

43.# SATHVIKA MOTORS (5649), KARIMNAGAR ROAD,OPP HP PETROL PUMP,SIRSILLA,DISTRICT - KARIMNAGAR,ANDHRA PRADESH PIN-505301 PH :-9440966649/9490284726.

SRIKALAHASTI

44.## SUNDEEP CARS (5972), 16/769,SRI RAM NAGAR COLONY,SRIKALAHASTI,DISTRICT-CHITTOOR,ANDHRA PRADESH PIN-517640 PH :08572-230714/9848294869.

SURYAPET

45.## SAI GLOBAL AUTO SERVICES (4550), OPP. AYYAPPA SWAMY TEMPLE,BY PASS ROAD, NH-9,SURYAPET,ANDHRA PRADESH PIN-508213 PH :08684-225552, 9848076108.

TENALI

46.## HIMAJA MARUTI SERVICE STATION (2828), LECTURER'S COLONY,GIRIJA HOSPITAL ROAD,GANGANAMMAPET,TENALI , GUNTUR DIST. (A.P.) PIN-522201 PH :08644-9849715727.

47.## RAHUL MOTORS (5157), D.NO.18-3-4BITRA SRI RAMULU STREET,BEHIND TELEPHONE EXCHANGE SALIPET,TENALI,ANDHRA PRADESH PIN-500035 PH :-9490187453/9440229595.

VAIZAG

48.# SRINIVASA AUTO GARAGE (5440), OPP. KANTI ROAD,NEAR RAYS PETROL PUMP - VISHAKHAPATNAM,DISTRICT - VISHAKHAPATNAM,ANDHRA PRADESH PIN-500001 PH :-9396839853.

VIJAYAWADA

49.## ADITYA CAR CARE (5231), 76-12-1.OPP PETROL PUMP,BHAVANIPURAM,DISTRICT - VIJAYAWADA,ANDHRA PRADESH PIN-520010 PH :-9703124070.

VISHAKAPATNAM

50.** VISAG AUTO SCANS (461), NO.54-10-18 ISUKATHOTA,BEHIND DECENT FLOORINGS,ISUKATHOTA JN.,VISHAKHAPATNAM PIN-530022 PH :0891-2556302/9246625885.

51.## SIRI AUTOMOBILES (5232), PLOT O 94/A IDA E BLOCK,AUTO NAGAR, GAJUWAKA,VISHAKHAPATNAM,ANDHRA PRADESH PIN-530026 PH :-9963296667.

VIZAINAGARAM

52.* VIKRAMA AUTOMOBILES (4621), 17-13-4 TEMPLE STREET,VIZAINAGARAM (A.P.),VIZAINAGARAM (A.P.) PIN-531202 PH :08922-2253951/9440192224.

WANAPARTHY

53.# SMC MOTORS (5658), K.K.T. ROAD,BASAVANNA GADDA,WANAPARTHY,DISTRICT -MAHABUBNAGAR,ANDHRA PRADESH PIN-509103 PH :8545-9440142927.

WARANGAL

54.## VAISHNAVI AUTOMOBILES (470), OPP. NEW SCIENCE DEGREE COLLEGE,HUNTER ROAD,HANAMKONDA,WARANGAL PIN-506001 PH :-9866561075.

ARUNACHAL PRADESH

ALONG

55.## BANNU MOTORS (1744), SIYOM MARKET,ALONG,WEST SIANG DISTT.,(ARUNACHAL PRADESH) PIN-791001 PH :03783-233407.

BOMDILA

56.## GURU MOTORS (3921), BIRPUR,RUPA,ARUNACHAL PRADESH PIN-790003 PH :03712-232727.

NIRJULI

57.## SANGO SERVICE STATION (5742), NH-52, NIRJULI,DISTRICT-PAPUMPARE,ARUNACHAL PRADESH PIN-791110 PH :-9436052480.

ROING

58.## PERTIN MARUTI WORKS (5545), DISTRICT-LOWER DIBANG VALLEY,ROING,ARUNACHAL PRADESH PIN-792110 PH :03803-262843.

TAWANG

59.## TAWANG MARUTI SERVICING STATION (4255), OLD BAZAR LINE,P.O. & P.S.,TAWANG,ARUNACHAL PRADESH PIN-790104 PH :03782-222143.

YINGKIONG

60.# VIJAY MOTORS (5971), UPPER MARKET, P.O:YINGKIONG,DISTRICT-UPPER SIANG,ARUNACHAL PRADESH PIN-791002 PH :-9436228808.

ZIRO

61.## HILLS AUTO AGENCY (3922), POLICE RESERVE & PETROL PUMP ROAD,HAPOLI BAZAR P.O. ZIRO,DISTT. LOWER SUBANSIRI,ARUNACHAL PRADESH PIN-791120 PH :03788-224736.

ASSAM

BADARPUR

62.## MARUTI CAR PLAZA (3635), NEAR INDUSTRIAL AREA,S.T. ROAD,BADARPUR,DISTT. KARIMGANJ (ASSAM) PIN-788806 PH :03845-268257.

BISHAWANATH CHARIALI

63.## DISHANG DONE (1058), 52 N.H.,BISHWANATH CHARIALI,DISTT. SONITPUR,ASSAM PIN-784176 PH :-222309.

64.* BINA AUTOMATION (3677), P.O. BISHAWANATH CHARIALI,DISTT. SONITPUR,ASSAM PIN-784176 PH :03715-230356.

BOKAJAN

65.## SREE GANESH MOTORS (6040), SUKHANJAN SUPER MARKET, P.O:BOKAJAN(C.F.),DISTRICT KARBI ANGLONG,ASSAM PIN-782480 PH :03675-246977/9435167138.

BOKAKHAT

66.## GOENKA AUTOMOBILES (2878), P.O. BOKAKHAT,DISTT. GOLAGHAT,ASSAM PIN-785612 PH :03776-268366.

DHALIGAON

67.## ADHIKARI MOTOR WORKS (4049), P.O. DHALIGAON,DIST-BONGAIGAON,ASSAM PIN-783385 PH :03664-241721/9435214176.

DHEMAJI

68.## NARAH AUTOMOBILES (3852), C/O BLUE HILL COUNTER,P.O. DHEMAJI,DISTT. DHEMAJI,(ASSAM) PIN-787057 PH :03753-225146.

DHUBRI

69.## BRAHMAPUTRA MOTOR SERVICING STATION (3127), G.T.B ROAD,DHUBRI,(ASSAM) PIN-783301 PH :03662-234021.

DIBRUGARH

70.* GEE DEE AUTO SERVICE (953), JHALUKPARA,DIBRUGARH,ASSAM PIN-786001 PH :0373-2329796.

71.** MEHBOOB AUTOMOBILES & TYRE SERVICES (1760), CHOWKIDINGHEE,NEAR STATE TRANSPORT,DIBRUGARH PIN-786003 PH :0373-2318072.

DIGBOI

72.** GAURI AUTOMOBILES (3760), MULIABARI,DIGBOI PIN-786171 PH :03751-269029.

DIPHU

** A-Category Mass : Free & paid Service, Major repairs & Accidental repairs

* B-Category Mass : Free & paid Service & Major repairs

C-Category Mass : Free & paid Service & Minor repairs

D-Category Mass : Free Service & Minor repairs

73.## WOJARU MOTORS (4377), DPHU MANJA ROAD,DILAJI,NEAR BIRLA FACTORY,DIPHU PIN-782460
PH :03671-271466.

DOOM DOOMA

74.* S K AUTO CARE (3962), UCHAMATI,NATIONAL HIGHWAY,DOOM DUMA,ASSAM PIN-786151
PH :03759-240243/9435135876.

GOALPARA

75.## BHARAT ENGINEERING WORKS (969), PO - BALDMARI,AGIA ROAD,GOALPARA,(ASSAM) PIN-783102
PH :-240321.

GOLAGHAT

76.## KAKOTI MOTOR WORKS (1074), NEW AMOLAPATTY,RANGPUR,P.O. GOLAGHAT,DISTT. GOLAGHAT (ASSAM) PIN-785621
PH :-283177.

GOSSAIGAON

77.## NARZARY AUTOMOBILES (4544), NH-31C, HABRUBIL,GOSSAIGAON,DIST KOKRAJHAR,ASSAM PIN-783360
PH :-9435127166.

GUWAHATI

78.** MONO MOTOR WORKS (966), BAMUNI MAIDAN,GUWAHATI PIN-781021
PH :-2550115/2656982/9864060665.

HAILAKANDI

79.## RONOK AUTOMOBILES (5978), LALA ROAD, NEAR CIVIL HOSPITAL,HAILAKANDI,DISTRICT-HAILAKANDI,ASSAM PIN-788151
PH :-223328/9707428563.

HOZAI

80.## PRAMAN MOTORS (5730), NAGANDRA NAGAR, WARD NO.1-HOJAI,DISTRICT-NAGAON,ASSAM PIN-782435
PH :-9954369700.

JONAI

81.## BOROOAH MOTORS (4545), NH-52 MURKONG SLEEK,DIST. DHEMAJI,JONAI,ASSAM PIN-787060
PH :03758-222219 (R).

KARIMGANJ

82.## S D AUTOMOBILE (4931), SILCHAR ROAD,KARIMGANJ,KARIMGANJ PIN-788710
PH :-9435074975.

KOKARAJHAR

83.## NAGA AUTOMOBILES WORKS (3879), JUHWLAO DWIMALOO ROAD,BHOBANIPUR,DISTT KOKRAJHAR,ASSAM PIN-783370
PH :03661-275545.

LUMDING

84.## BEDI MOTORS (5827), MAIN ROAD,NORTH LUMDING,LUMDING,DISTRICT - NAGAON,(ASSAM) PIN-782447
PH :-9435163185.

MANGALDAI

85.## PRIYAM AUTOMOBILES (2424), NH 52 COLLEGE ROAD,MANGALDAI,ASSAM PIN-784125
PH :03713-230528.

MARGHERITA

86.* VIRDI MOTOR WORKS (955), MISSION ROAD,P.O. MARGHERITA,DIST. TINSUKIA,(ASSAM) PIN-786181
PH :-220406.

MARIANI

87.## VASKAR AUTOMOBILES (5237), NEAR NST TINALI. P.O. :MARIANI,DISTRICT - JORHAT,ASSAM PIN-785634
PH :03771-293810.

MIRZA

88.## KALITA AUTOMOBILES (4259), N.H. 37,NEAR PETROL PUMP,MIRZA,ASSAM PIN-781125
PH :-9864410013.

MORANHAT

89.* CHINAKI SERVICE STATION (2973), (MARUTI AUTHORISED SERVICE STATION),NATUN NAGAR A.T. ROAD,MORANHAT,(ASSAM) PIN-785670
PH :03754-229522/9401512821.

MORIGAON

90.## PRAGATI MOTORS (5273), MORIGAON TOWN. WARD NO.1 BHATBOR,DOLON PATH,P.O.:MORIGAON,DISTRICT - MORIGAON,ASSAM PIN-782105
PH :-9864189158.

NAGAON

91.## DAS MARUTI MOTOR WORKS (3734), NAGAON,(ASSAM) PIN-782001
PH :03672-225031.

NALBARI

92.## B.R.K. AUTOMOBILES ENGINEERING WORKS (2838), HAJO ROAD,NALBARI,(ASSAM) PIN-781335
PH :03624-9954050050.

NAMRUP

93.## RAJ ENTERPRISES (3849), NAMRUP INDUSTRIAL ENTERPRISES,SONARI TINIALI,PARBATPUR,NAMRUP (ASSAM) PIN-786623
PH :0374-2502856.

NORTH LAKHIMPUR

94.** GREEN LAND MARUTI WORKS (2974), NEAR GURUDWARA,NH 52,NORTH LAKHIMPUR,(ASSAM) PIN-787001
PH :03752-9435086197/9577646296.

PATHSALA

95.## USHA AUTOMOBILES (4240), N.H 31, PATHSALA,DISTRICT-BARPETA,ASSAM PIN-781325
PH :-266012/9401310431.

RANGIA

96.## SWEET MOTOR WORKS (4375), NH-31,N.T. ROAD,WARD NO. 5,RANGIA PIN-781354
PH :03621-240525, 9435141291.

SILAPATHAR

97.## J. B. MOTORS (5743), NH-52, JONAI ROAD-SILAPATHAR,DISTRICT - DHEMAJI,ASSAM PIN-787059
PH :-9954635182.

SILCHAR

98.** CARDROME (1559), 2ND LINK ROAD JUNCTION,SONAI ROAD (M H C ROAD),SILCHAR,(ASSAM) PIN-788006
PH :-225128.

TEZPUR

99.## POOJA MOTOR WORKS (4373), N.T. ROAD,MURATETLI,TEZPUR,ASSAM PIN-784001
PH :03712-200127.

TINSUKIA

100.* AUTO MAKERS (934), NEAR SHIVDHAM MANDIR,MAKUM ROAD,TINSUKIA,(ASSAM) PIN-786125
PH :0374-2352841.

TITABAR

101.## SHANKAR AUTO WORKS (5174), C/O:SHIV SHAKTI AUTO WORKS.BALAJI,MARKET TITABAR CHARIALI TITABAR,DISTRICT - JORHAT,ASSAM PIN-785634
PH :-249096.

UDALGURI

102.## RENU MOTORS (4543), WARD NO. 2, U.T. ROAD,UDALGURI TOWN,UDALGURI,ASSAM PIN-784509
PH :03711-225096, 9435222344.

BIHAR

ARRAH

103.## ANJALI ENTERPRISES (5533), ARRAH SASARAM MAIN ROAD,ZERO MILE,NEAR POWER GRID, ARRAH,DISTRICT-BHOJPUR,(BIHAR) PIN-802301
PH :06182-9386734804.

AURANGABAD (BIHAR)

104.## K R N AUTOMOBILE (2242), NEW G.T. ROAD,(NH-2),AURANGABAD,(BIHAR) PIN-824101
PH :06186-9304930657.

BEGUSARAI

105.## K.B. MOTORS (4768), NH-31,SINGHAUL, POKHAR,BEGUSARAI,BIHAR PIN-851134
PH :06243-9835214115.

106.* NATIONAL AUTO WORKS (1536), INDUSTRIAL AREA,BARAUNI,BEGUSARAI PIN-851122
PH :06243-9973381733.

BHAGALPUR

107.** RUPRA AUTOMOBILES (1577), EAST OF AIRPORT,BHAGALPUR,P.O. BAHADURPUR,(BIHAR) PIN-813210
PH :0641-9334385531.

BIHAR SHARIFF

108.## SARVADAY ENGG. & AUTO SER (1549), INDUSTRIAL ESTATE,RAMCHANDRAPUR,BIHARSHARIFF (NALANDA) PIN-803101
PH :06112-9334672919.

CHAPRA

109.## PRASAD AUTOMOBILES (1974), BHAGWAN BAZAR,CHAPRA,(BIHAR) PIN-841301
PH :06152-9431216362.

DARBHANGA

110.* SINGH MARUTI CARE (2277), P.O. LALBAGH,DARBHANGA,(BIHAR) PIN-846004
PH :06272-9431293796.

GAYA

** A-Category Mass : Free & paid Service, Major repairs & Accidental repairs

* B-Category Mass : Free & paid Service & Major repairs

C-Category Mass : Free & paid Service & Minor repairs

D-Category Mass : Free Service & Minor repairs

111.* AUTO CARE (3027), DURGA BARI,HARIDAS CHATTERJEE LANE,NEAR SAINT PAUL SCHOOL,GAYA (BIHAR) PIN-823001
PH :0631-9939407978.

HAJIPUR

112.## ALFA AUTO (5454), PASWAN CHOWK, NH13, HAJIPUR,DISTRICT - VAISHALI,BIHAR PIN-844101
PH :06244-9431327965.

HAZIPUR

113.** HI-TECH AUTOMOBILE (3123), GANDHI SETU PATH,N.H.-19,HAJIPUR,VAISHALI (BIHAR) PIN-844101
PH :06224-9835044502.

KAHALGAON

114.## MAHA GAURI ENTERPRISES (5822), NTPC ROAD, GANGANAGAR , CHOWRATHIYASTHAN,KAHALGAON,DISTRICT-BHAGALPUR,BIHAR PIN-813203
PH :-9431463558.

KHAGARIA

115.## HIGHWAY SERVICE STATION (2374), NH-31,P.O. KOSHI COLLEGE,KHAGARIA (BIHAR) PIN-851204
PH :06244-9430067775.

MADHEPURA

116.## KRISHNA AUTOMOBILES (2639), PATHRAHA,SINGHSWAR ROAD,MADHEPURA,(BIHAR) PIN-852213
PH :06476-223315.

MADHUBANI

117.## VIDYAPATI AUTOMOBILE (4234), BHAUARA,GANGASAGAR,MADHUBANI,BIHAR PIN-847211
PH :06276-9534298143.

MOTIHARI

118.* PUJA AUTOMOBILES (3174), NEAR LAL PD. PETROL PUMP,NH-28 CHHATAUNI,MOTIHARI,EAST CHAMPARAN (BIHAR) PIN-845401
PH :06252-9709752799.

MUNGER

119.## SUN BEAM ENGG WORKS (1533), 150 BETWAN BAZAR,P.O.& DISTT. MUNGER (BIHAR) PIN-811201
PH :6344-9431418941.

MUZAFFARPUR

120.** DYNAMIC MARUTI SERVICE CENTRE (1163), HARI SHARAN MARG,AMGOLA,MUZAFFARPUR PIN-842002
PH :0621-9386834595.

121.## PERFECT MOTORS (3465), NEAR CHANDNI CHAUK,JHITKAIYA,POST: MIT PS: BRAHAMPURA,MUZAFFARPUR (BIHAR) PIN-842003
PH :0621-9470450260.

PATNA

122.** CAR SCANNER (1552), OPP. BATA,KANKAR BAGH COLONY,PATNA PIN-800020
PH :0612-9431016342.

123.** CITY AUTO SERVICE (1250), NEAR ALPANA MARKET,PATLIPUTRA COLONY,PATNA PIN-800013
PH :0612-9334117070.

124.** GOOD WRENCH SERVICES (3364), DAUDBIGHA,NR. NALANDA MEDICAL COLLEGE,KANKAR BAGH, MAIN ROAD,PATNA (BIHAR) PIN-800020
PH :0612-7277772777.

125.## MARUTI MAINTAINER (4842), PLOT NO. 73,NEAR RAJENDAR NAGAR,OVER BRIDGE, KANKARBAGH,PATNA PIN-800020
PH :0612-9304564382.

126.* MOHINI AUTOMOBILES (1049), BEHIND RESERVE BANK OF INDIA,EXHIBITION ROAD,PATNA PIN-800001
PH :0612-9431094340.

127.** RANJAN MOTORS (3665), SUDARSHAN PATH,NEAR PATNA SAHIB STATION,PATNA CITY PIN-800009
PH :0612-9334084343.

128.## RELIABLE MOTORS (2972), NEAR WEST OF COMMUNITY HALL,NEAR NISHA DEVI ASHRAN,EAST LOHANIPUR KADAMKUAN,PATNA (BIHAR) PIN-800003
PH :0612-2686247/2671215.

129.** TIRUPATI AUTO (1956), ASHIANA MORE,BAILEY ROAD OPPOSITE UNION BANK,RAJABAZAR,PATNA PIN-800014
PH :0612-9835050292.

PURNEA

130.## AUTO INDIA (3026), BIHAR TALKIES ROAD,LINE BAZAR,PURNEA (BIHAR) PIN-854301
PH :0641-9334461651/9470204501.

SAMASTIPUR

131.## MARUTI CARE (1526), TAJPUR ROAD,SAMASTIPUR,(BIHAR) PIN-848101
PH :06274-9835034061.

SASARAM

132.## TRIPTY CAR SERVICE CENTRE (5535), NEAR RELIANCE PETROL PUMP,G.T. ROAD,NH-2,SASARAM,DISTRICT-SASARAM, BIHAR PIN-821115
PH :-9431485592.

SITAMARHI

133.* SITAMARHI AUTO CARE (6050), INDUSTRIAL AREA, RAJOPATTI,PO.SITAMARHI,DISTRICT-SITAMARHI,BIHAR PIN-843302
PH :-9430012437.

CHANDIGARH

CHANDIGARH

134.## HAPPY SERVICE STATION (769), SECTOR 17B,MADHYA MARG,CHANDIGARH PIN-160017
PH :-9216721561.

135.** CAR CLINIC (179), 128 INDUSTRIAL AREA,PHASE-II,CHANDIGARH PIN-160002
PH :-9417216782.

136.## RATTAN MOTORS (1155), SECTOR 23-C,CHANDIGARH PIN-160023
PH :-9814008335.

137.## HI-TEK MOTORZ (4743), PLOT NO. 658,INDUSTRIAL AREA,PHASE-1,CHANDIGARH PIN-160002
PH :0172-9872567868.

CHHATTISGARH

AMBIKAPUR

138.# MARUTI AUTO CARE (4839), KHARSIA NAKA,AMBIKAPUR,DISTRICT-SURGUJA,CHATTISGARH PIN-497001
PH :0774-9425256087/280294.

BILASPUR (CHAT)

139.## RAINEY'S AUTO CARE (4770), RAIPUR ROAD MAHARANA PRATAP CHOWK,NEAR LABOUR COMMISSIONER OFFICE,JARBHATA,BILASPUR (CHATTISGARH) PIN-495001
PH :07752-224224.

JAGDALPUR

140.## VISHWAKARMA AUTOMOBILES (4467), RAJMAHAL PARISAR,BAHAMBERS OF COMMERCE ROAD,JAGDALPUR,CHHATTISGARH PIN-494001
PH :07782-223196, 228207.

JAMNIPALI

141.## AUTO CARE (3823), 203 J P COMPLEX SADA COLONY,JAMNIPALI,TEH. KATHGHORA,DIST. KORBA (CHATTISGARH) PIN-495450
PH :07759-233797/233353.

KORBA

142.## AUTO SELF SERVICE (5020), MURARKA MARKET ROAD,(INDUSTRIAL ROAD),KORBA PIN-495677
PH :07759-247250/251.

MANENDRAGARH

143.## SHARMA AUTO CENTRE (5354), MAIN ROAD - MANENDRAGARH,DISTRICT - KOREA,CHHATISGARH PIN-497442
PH :07771-241872/215305.

RAIPUR

144.## SHIVAM CAR SERVICES (4774), BILASPUR ROAD,KHAMTARAI,RAIPUR,CHATTISGARH PIN-492006
PH :0771-3090522/2563093/3290522.

RAJ NANDGAON (CHH)

145.## SAI MOTORS (3672), OPP DENTAL COLLEGE,SUNDARA,DURG NAGPUR HIGHWAY (NH-8),RAJNANDGAON PIN-491441
PH :07744-228433/9179791051.

DELHI

DELHI

146.** SUBHYATRA AUTOMOBILES (5045), PLOT NO 31,N BLOCK SECTOR - 3,BAWANA INDUSTRIAL AREA BAWANA PIN-110039
PH :011-9810668715/9717421118.

147.** NAVEEN AUTOMOBILES (4934), 37, PATPARGANJ INDUSTRIAL AREA,NEW DELHI PIN-110092
PH :011-22163719/65092326.

148.## AUTO ENGRS.SERVICE STN. (8023), OPP.MODEL TOWN,DERAWAL NAGAR,DELHI PIN-110009
PH :011-27231421/27231839.

149.* DRIVE WELL SERVICE STN. (866), 1/486, G.C.S. COMPLEX, MAIN G.T. ROAD,DILSHAD GARDEN,NEW DELHI,PIN-110095
PH :011-22575411/22119859.

150.** RAJINDRA SERVICES PVT. LTD. (826), B-55 G.T.KARNAL ROAD,INDUSTRIAL AREA,DELHI PIN-110033
PH :011-27114915/42384512.

** A-Category Mass : Free & paid Service, Major repairs & Accidental repairs

* B-Category Mass : Free & paid Service & Major repairs

C-Category Mass : Free & paid Service & Minor repairs

D-Category Mass : Free Service & Minor repairs

MARUTI AUTHORISED SERVICE STATIONS (MASS) (AS ON 01.04.2017)

151.** SHALIMAR AUTOMOBILES PVT. LTD (871), C-91/9 WAZIRPUR INDUSTRIAL AREA,ASHOK VIHAR CROSSING,DELHI PIN-110052
PH :011-27377718/27373096.

152.## WIG AUTOMOBILES (8012), D-3 S.M.A CO-OP. INDL. ESTATE,(OPP. JAHANGIR PURI CHOWK),G.T. KARNAL ROAD,DELHI PIN-110033
PH :011-27692649/27696855.

153.* AAPKA KARKHANA (MOTORS)PL (869), 62/I POSANGIPUR MAIN MARKET,A-3 BLOCK JANAKPURI,NEW DELHI,NEW DELHI PIN-110058
PH :011-25520157/25620947.

154.## ASHA AUTOMOBILES (850), A-2 CHOTTEY LAL PARK,NAJAFGARH ROAD,OPP.KIRTI NGR.P.O,NEW DELHI PIN-110015
PH :011-25418492/25102655.

155.* AUTOWISE SERVICE STATION (8001), PP-38A GALI NO.10,ANAND PARBAT,KAROL BAGH,NEW DELHI PIN-110005
PH :011-28761021.

156.## BASANT MOTORS (8003), 78 TOLSTOY LANE,BEHIND SCINDIA HOUSE,NEW DELHI PIN-110001
PH :011-23529566/23326860.

157.## BHASIN SERVICE STATION (830), DR. K.S. KRISHNAN ROAD,NEAR PUSA GATE,NEW DELHI PIN-110012
PH :011-25841794/25842852.

158.## ENGINEERS SERVICE STATION (834), SHRI AUROBINDO MARG,(SAFDARJANG AIRPORT),NEW DELHI PIN-110003
PH :011-27512696.

159.## GUPTA SERVICE STATION (872), MOTI BAGH SOUGH,NEW DELHI PIN-110021
PH :011-26170989/26192162.

160.## KITCHNER ROAD SERVICE STATION (864), ROAD NO.41,SAHEED LALA JAGAT NARAYAN MARG,NEAR T.V. TOWER PITAMPURA,DELHI PIN-110034
PH :011-65375676/27315321.

161.** KUMAR AUTOMOBILES (855), B-281 OKHLA INDUSTRIAL AREA,PHASE-I,NEW DELHI PIN-110020
PH :011-26812566/26813132.

162.** MULTAN AUTOMOBILE ENGRS. (853), B-7/1 OKHLA INDUSTRIAL AREA,PHASE II,NEW DELHI PIN-110020
PH :011-41610495/41610496.

163.** SEVEN HILLS AUTO.(P) LTD. (848), D-20/1 OKHLA INDUSTRIAL AREA,PHASE II,NEW DELHI PIN-110020
PH :011-26388766/26388768.

164.## YASHWANT PLACE SER. STN. (8022), AFRICA AVENUE,(OPP.CHANAKYA CINEMA),NEW DELHI PIN-110021
PH :011-24122424/26876388.

165.** BRIGHT MOTORS (P) LTD. (885), C-263 PEERAGARHI,OUTER RING ROAD,DELHI PIN-110087
PH :011-25267885/5252226.

166.## SRI BALAJI AUTOMOBILE (8038), KHASRA NO.33,13/2-12 MAIN BAWANA ROAD,SAMEYPUR (NEAR DELHI COLLEGE OF ENGG.),DELHI PIN-110042
PH :011-65151149.

167.## SRI SAI AUTO ENGINEERS (8074), 487/59 PEERA GARHI,INDUSTRIAL AREA,DELHI PIN-110087
PH :011-25260904/24356581.

168.* CMP AUTOMOBILES (8073), C-18 SHASHI GARDEN,OPP. MAYUR VIHAR,DELHI PIN-110092
PH :011-22750083, 22750084.

169.** TONIKA AUTOMOBILES (8079), A-15 WAZIRPUR INDL. AREA,MAIN RING ROAD,DELHI PIN-110052
PH :011-41472572.

170.## QUTAB SERVICE STATION (8078), MEHRAULI ROAD,NEW DELHI PIN-110017
PH :011-26522726/26561242.

171.* SATYA SERVICE STATION PVT. LTD. (3625), L-BLOCK HARI NAGAR,JAIL ROAD,NEW DELHI PIN-110064
PH :011-25432926.

172.** R S AUTOMOBILES (273), BAWA POTTERIES INDUSTRIAL COMPOUND,ARUNA ASAF ALI MARG,VASANT KUNJ,NEW DELHI PIN-110070
PH :011-41761026, 41761810.

173.## NORTHERN SERVICE STATION (337), SARAI BASTI,ROAD NO.40,OPP. SHASTRI NAGAR,DELHI PIN-110035
PH :011-23653122/65796229.

174.** P R G MOTORS (365), A-99, 103CH. TEKCHAND MARKET,GANESH NAGAR - TILAK NAGAR,DELHI PIN-110018
PH :011-42137852/25996299.

175.## SINTEX SERVICE STATION (777), 883, RITHALA INDUSTRIAL AREA,FIRNI NALA ROAD,DELHI PIN-110085
PH :011-27055055/64694522.

176.* AUTO POINT SERVICE (1267), 70B RATTAN PARK,OPP. RAMESH NAGAR,NEW DELHI PIN-110015
PH :011-25434040/25101270.

177.## SHARMA AUTOMOBILES (1939), 11/78 VILLAGE MOTI BAGH,NEAR NANAKPURA GURDWARA,RING ROAD,NEW DELHI PIN-110021
PH :011-26875050, 26118764.

178.## BATRA CAR CARE CENTRE (1936), HUMAYUN ROAD,NEW DELHI PIN-110003
PH :011-23389332.

179.## SHRI BALAJI CAR SCAN (2677), 43/12 OPP, NEW ANAJ MANDI,NAJAFGARH,NEW DELHI PIN-110043
PH :011-28012074/65478300.

180.* STAR AUTOMOBILES (2574), MAIN SAFIABAD ROAD,NARELA,DELHI PIN-110040
PH :011-27284784.

181.## IMAGE (2561), IOC PUMP,NEAR SAMACHAR APT. OPP. KIRTI APT.,MAYUR VIHAR PHASE-I EXT.,DELHI PIN-110091
PH :011-22716910/22717590.

182.## GLOBE SERVICE STATION (3631), 18TH KM MATHURA ROAD,BADARPUR,NEW DELHI PIN-110044
PH :011-41898333.

183.## EXCEL AUTOMOBILES (3342), PLOT NO. 78,BAGDOLA VILLAGE,SECTOR 8, DWARKA,NEW DELHI PIN-110045
PH :011-25366202/65469750.

184.** A-ONE AUTOMOBILES (3362), 487/35 NATIONAL MARKET,PEERAGARHI,DELHI PIN-110087
PH :011-25278935/25287066.

185.* EXCLUSIVE AUTOMOBILES PVT. LTD. (3546), 98 MANGOLPUR KALAN,SECTOR-2 NEAR JAIPUR GOLDEN HOSPITAL,ROHINI,DELHI PIN-110085
PH :011-7162696/32483339.

186.## AUTOTECH ENGINEERS (4551), PLOT NO. 20-24,MATIYALA VILLAGE,SECTOR-3, NEAR DPS DWARKA,NEW DELHI PIN-110075
PH :011-25083711.

187.## ANAND MOTORS (4471), B-27,G.T. KARNAL ROAD,INDUSTRIAL AREA,NEW DELHI PIN-110033
PH :011-27226256, 27466835.

188.## BHAGIRATH MOTORS (4737), PLOT NO. 153/543,POOTH KHURD,DELHI PIN-110039
PH :011-27761321.

189.## HUNDRED PERCENT FILLING & SERVICE STATION (4939), LSC, SECTOR-9,OPP. NHAI,DWARKA,NEW DELHI PIN-110075
PH :011-25082966/25082967.

190.## BAJAJ MOTORS (4940), T-5/242,MANGOLPURI INDUSTRIAL AREA,PHASE-1,NEW DELHI PIN-110083
PH :011-65164147.

191.## SHIKHAR AUTOMOBILES (5546), A-2/1CHOTTEY LAL PARK, SHIVAJI MARG,OPP KIRTI NAGAR,METRO PILLAR NO.341,NEW DELHI,DISTRICT - DELHI,DELHI PIN-110015
PH :011-25432956.

NEW DELHI

192.## ROHAN SERVICES (5444), PLOT NO:125, VILLAGE POCHANPUR,SECTOR - 23 DWARKA,DISTRICT - DELHI (WEST),DELHI PIN-110075
PH :011-9911180827.

GOA

BICHOLIM

193.## SHREE GURUKRUPA AUTOWORLD (1249), PLOT NO.76,BICHOLIM INDUSTRIAL ESTATE,BICHOLIM,GOA PIN-403529
PH :0832-2362600/9823831555.

CURCHOREM

194.## VIPUL AUTOMOBILES (5376), PLOT NO.7,8,9,KAKODA INSUSTRIAL-,STATE, KAKODA CURCHOREM,DISTRICT - SOUTH GOA,GOA PIN-403706
PH :0832-2651888/ 09422018746.

GOA

195.* VIKAS ENGINEERING WORKS (4953), BHOMA,KUNDAIM,GOA PIN-403107
PH :0832-2396033/9823780335.

MAPUSA

196.## SARDESAI AUTOMOBILES (2176), NEAR MILAGRES CHURCH,194 GAUNSAWADA,MAPUSA,GOA PIN-403507
PH :0832-2256350, 2262361.

PONDA

197.* DHAVLIKAR AUTOMOBILES (2041), NO.5 TIP TOP MANSION IV,INDIRA NAGAR,PONDA,GOA PIN-403401
PH :0832-2317769/2315688/9890669879.

VERNA

198.* LUBRICARE SERVICES (261), 7-D GOULLOY,NH.17 NUVEM,SALCETE,GOA PIN-403601
PH :-2790040.

GUJARAT

AHMEDABAD

199.* AUTOWAY (125), MANGALYA COMPLEX,NEAR ANJALI CINEMA CROSS ROAD,BATTHA,AHMEDABAD PIN-380007
PH :079-9898016888.

** A-Category Mass : Free & paid Service, Major repairs & Accidental repairs

* B-Category Mass : Free & paid Service & Major repairs

C-Category Mass : Free & paid Service & Minor repairs

D-Category Mass : Free Service & Minor repairs

200.## DAHISON MOTORS (143), NEAR MANAV MANDIR,DRIVE IN ROAD,AHMEDABAD PIN-380052
PH :079-9898064929 / 9898096242.

201.* RAJAN MOTORS (2873), C/0 M/S. SUPER SERVICE STATION,79/80 JAGABHAI PARK,RAM BAUG MANINAGAR,AHMEDABAD PIN-380008
PH :079-9825972345 / 9879273953.

202.## MEGHDOOT MOTORS (3437), MASONIC LODGE COMPOUND,SHAHIBAUG ROAD,AHMEDABAD PIN-380004
PH :079-9825488228.

203.** SPEED AUTO CARE PVT. LTD (5524), NH-8,VIRAT NAGAR AHMEDABAD,DISTRICT - AHMEDABAD,GUJARAT PIN-382350
PH :079-9825210344 / 9925204239.

204.* POKAR AUTO REPAIRERS (2479), NEAR UNION CO. BANK,SAIJPUR BOGHA,NARODA ROAD,AHMEDABAD PIN-382345
PH :079-9998336510.

AMRELI

205.* CAR CARE CENTRE (2734), PATEL GARAGE,CHAKRAGADH ROAD,AMRELI,(GUJARAT) PIN-365601
PH :02792-220099/233519/9825422922.

206.* KHODIAR MOTORS (3029), GAVADKA ROAD,AMRELI,(GUJARAT) PIN-365601
PH :02792-224696/9825672657.

ANAND

207.* PATEL TRACTOR COMPANY (2221), (SERVICE DIVISION),BEHIND SUNIL CHAMBERS,STATION ROAD,ANAND PIN-388001
PH :02692-9925534494.

208.## SHAKTI MOTORS (2226), OPP. J.K. PARK,NATIONAL HIGHWAY NO.8,P.O. VAGHASHI,TA: ANAND DISTT. KHEDA PIN-388320
PH :02692-9825792999.

ANJAR

209.## CAR AGE (5542), PLOT NO.11, MAHATMA NAGAR-1,ANJAR-,GADHPADAR ROAD, NR. MAHAKALESHWAR,MAHADEV MANDIR,ANJAR,GUJARAT PIN-370201
PH :02836-9427216886/9427211167/241796.

BARDOLI

210.** POOJA MOTORS (361), NEAR GIDC,SURAT ROAD,BARDOLI,(GUJARAT) PIN-394601
PH :02622-9825762621.

BHARUCH

211.* NEW MARUTI MOTORS (5156), 9/16 AKASH GANGA.B/H CNG PUMP,OLD NH -8.BHOLAV,DISTRICT - BHARUCH,GUJARAT PIN-392002
PH :02642-9879532460.

BHAVNAGAR

212.## VIKRAM MOTOR GARAGE (127), TAKHTESHWAR PLOT,NEAR CHANDRA BHUVAN,BHAVNAGAR PIN-364002
PH :0278-9426463280.

BHUJ

213.* ASHA MOTORS (3629), LAL TEKRI,HOSPITAL ROAD,BHUJ,(GUJARAT) PIN-370001
PH :02832-9825235088.

BILIMORA

214.## PATEL AUTOMOBILES (4030), DANDEKAR COMPOUND,GANDEVI ROAD,BILIMORA PIN-396380
PH :02634-9824123875 / 9825471557.

BORSAD

215.## SUMAN MOTORS (3863), NEAR NISHRAYA CROSSING,BHARAN ROAD,BORSAD,DISTT. ANAND PIN-388540
PH :02696-221524/9428434436.

CHAND KHEDA

216.* BALVINDER AUTOMOBILES (2528), PLOT NO.202/2,NATIONAL HIGHWAY NO.8,CHAND KHEDA,DISTT. GANDHI NAGAR (GUJARAT) PIN-382424
PH :079-9924016000 / 9924061000.

CHIKHLI (GUJ.)

217.## SHREE AMBICA MOTORS (2663), KUNDI FATAK,NEAR ADARSH NURSERY,N.H.8,CHIKHLI DISTT. VALSAD (GUJARAT) PIN-396001
PH :02632-285477/285029/9825131520.

218.## INAL MOTORS (3929), POST MAJIGAM,CHIKLI BILIMORA ROAD,DISTT NAVSARI PIN-396321
PH :02634-9099033773.

DAHOD

219.* CAR SEVA (2438), APNA PLASTIC COMPOUND,OPP. ST. STEPHEN SCHOOL,GODHRA ROAD,DAHOD PIN-389151
PH :02673-9426469122.

DAMAN

220.## CAR ZONE (4358), SURVEY NO. 70/3,VARKUND, OPP VEERA DA DHABA,VAPI DAMAN ROAD,DAMAN PIN-396210
PH :0260-9824184449.

221.## TOP GEAR (5469), DAMAN-KUNTA ROAD.KUNTA DAMAN,DISTRICT - UNION TERRITORY,GUJARAT PIN-396210
PH :-9825631264.

DEESA

222.## VAKHARIA MOTORS (3970), G L PADIAR COMPLEX,PALANPUR PATHAN HIGHWAY,OPP. RAJMANDIR TALKIES,DEESA PIN-385001
PH :-9377728841.

DHARI

223.## GURUKRUPA MOTORS (5876), NR. NARMADESHWAR MAHADEV TEMPLE,DHARI, AMRELI ROAD, DHARI,DISTRICT-AMRELI,GUJARAT PIN-365640
PH :-9924728405/9825374658.

DHORAJI

224.## UNIVERSE AUTO (5837), SARDAR CHOWK,DHORAJI,DISTRICT-RAJKOT,GUJARAT PIN-360410
PH :-9727714643.

DWARKA

225.# BHADRA SERVICES (5975), OPP,SATHWARA BHUVAN,NR.KANDAS BAPU ASHRAM, DWARKA,DISTRICT-JAMNAGAR,GUJARAT PIN-361315
PH :02892-222207/9879615919.

GANDHI NAGAR

226.## SHITAL MOTORS P.LTD. (134), 304 G.I.D.C.,SECTOR-28,GANDHINAGAR (GUJARAT) PIN-382028
PH :079-9824310888 / 9924127065.

227.* RIDDHI MARUTI(A DIVISION OF SHREE ARBODA PVT. LTD (2151), E-19/10 G.I.D.C. SECTOR 26,NEAR K-7,GANDHINAGAR PIN-382044
PH :02712-9825041331.

228.* LABH MOTORS (4527), 803/2 KASHI DIAMOND,NR. PARTH GAS AGENCY,GIDC, SECTOR-28,GANDHINAGAR PIN-382028
PH :079-9825020030 / 9712920030.

HALOL

229.## MAA MOTORS (4767), GODHRA ROAD,NEAR TELEPHONE EXCHANGE,HALOL,GUJARAT PIN-389350
PH :02676-222375/9898610212.

HIMMATNAGAR

230.## MEHTA SERVICE STATION (135), NEAR SHANTI GARDEN,RESTAURANT,DIWALI BAUG MOTIPURA,N.H.B. HIMMATNAGAR GUJARAT PIN-383001
PH :-9825052891 / 9879682582.

IDAR

231.## ADINATH AUTOMOBILE & WORKSHOP (3136), NEAR HOTEL GREEN PARK,AMBAJI HIGHWAY ROAD,IDAR,(GUJARAT) PIN-383430
PH :02778-255787/255411.

232.## SUN MOTORS (5175), IDAR-HIMMATNAGAR HIGHWAY ROAD,AT KRUSHNAGAR. PO NETRAMLI,TA.IDER DISTRICT SABARKANTA,GUJARAT PIN-383430
PH :02778-9879589145 / 9228286768.

JAM KHAMBHALIA

233.## SHRI HARI OM MOTORS (4539), JADESWAR ROAD CHAR RASTA,OPP. KRISHNA WAY BRIDGE,JAM KHAMBHALIA,GUJARAT PIN-361305
PH :02833-9426955344.

JAMNAGAR

234.* LANDMARK AUTOMOBILES (1973), AIRPORT ROAD,KHAMBHALIA HIGHWAY,JAMNAGAR,(GUJARAT) PIN-361006
PH :0288-9227620700.

JETPUR

235.## GIRIRAJ MOTORS (3971), SARDAR CHOWK,JETPUR HIGHWAY,JETPUR PIN-360370
PH :02823-225780/9727154392.

JUNAGARH

236.## MARUTI MOTORS (266), G.I.D.C. - I,RAJKOT HIGHWAY,DOLATPARA,JUNAGADH(GUJARAT) PIN-362037
PH :0285-9904717770.

KALOL

237.## SUNRISE AUTO CENTRE (146), OPP. IFFCO,AHMEDABAD-MEHSANA ROAD,SAIJ KALOL,(NORTH GUJARAT) PIN-382721
PH :02764-309646/9824407885.

KAMREJ

238.* PATEL MOTOR GARAGE (2764), SURAT ROAD,JYOTI PARK,KAMREJ CHAR RASTA,KAMREJ DIST. SURAT PIN-394285
PH :02621-9825127413.

KAPADVANJ

** A-Category Mass : Free & paid Service, Major repairs & Accidental repairs

* B-Category Mass : Free & paid Service & Major repairs

C-Category Mass : Free & paid Service & Minor repairs

D-Category Mass : Free Service & Minor repairs

MARUTI AUTHORISED SERVICE STATIONS (MASS) (AS ON 01.04.2017)

239.## DISHA MOTORS (5960), MAHAMADPURA,KAPADVANJ-NADIAD ROAD,KAPADVANJ,DISTRICT-KHEDA,GUJARAT PIN-387620
PH :02691-9825641244 / 9426361548.

KESHOD

240.## PRASAD MOTORS (3969), VERAVAL HIGHWAY,KESHOD,KESHOD PIN-362220
PH :02871-9426424488 / 93280 01734.

KHEDBRAHMA

241.## MARUTI AUTO CARE (5342), OPP POLICE STATION,AHMEDABAD-AMBAJI STATE HIGHWAY,KHEDBRAHMA,GUJARAT PIN-382255
PH :02775-9427369512.

LIMDI

242.## PARTH AUTOMOBILES (4171), NEAR LIMDI CHOWK,AHMEDABAD RAJKOT HIGHWAY,LIMDI PIN-363641
PH :02763-9426714510.

LUNAWADA

243.## N.J. MOTORS (4370), MODASSA ROAD,NR. SAIFEE HOSPITAL,LUNAWADA,DIST: PANCHMAHAL (GUJARAT) PIN-389230
PH :026474-250700/99254252700.

MEHSANA

244.** SHUBH AUTO SERVICES (3367), NEAR AGRO PETROL PUMP,OLD RTO,RAMOSNA JAKAT NAKA,MEHSANA (GUJARAT) PIN-384002
PH :02762-9825120859 / 9825322460.

245.* SANSKAR MOTORS (5468), PALAVASANA -BECHARAJI ROAD,NR.ONGC FIRE STATION ,MEHSANA,DISTRICT-MEHSANA,GUJARAT PIN-384002
PH :02762-9825206359 / 9825604959.

MORVI

246.## ARUN MOTORS (2071), SANALA BYE PASS,NEAR G.P. GINING MILLS,MORBI,GUJARAT PIN-363641
PH :02822-9825100253 / 9825222825.

NADIAD

247.## SHIVAM MOTORS (4430), OPP RASHAM RESTAURANT,DABHAM CROSSING, N.H 8,NADIAD,GUJARAT PIN-387001
PH :0268-9824343515/258156.

NAKHATRANA

248.# ASHA MOTORS (4340), NANA ANGLADESH,NAKHATRANA HIGHWAY ROAD,NAKHATRANA,KUTCH PIN-370001
PH :02835-9427272315.

NAVSARI

249.** JIGAR MOTORS (133), N.H-8,KABILAPORE,NAVSARI,VALSAD DIST. (GUJARAT) PIN-396424
PH :02637-9879549533.

PALANPUR

250.## PANCHAL AUTO REPAIRING WO (138), HIGHWAY ROAD,NEAR RAILWAY CORSSING,PALANPUR PIN-385001
PH :02742-9426323294.

PETLAD

251.## SIDDHI MOTORS (4166), NADIAD-CAMBAY ROAD,NEAR KAILASH DHAM,PETLAD PIN-387001
PH :02697-9429031303.

PULSANA

252.## ZEBA MOTORS (4535), PLOT NO. 5,ZAIBUNISHA MANZIL, ANUKOOL NAGAR,BEHIND SAFED CHAL,UNN SURAT (GUJARAT) PIN-395006
PH :0261-9727719082.

RAJKOT

253.** KHODIYAR MOTORS (356), DHEBAR ROAD (SOUTH),ATIKA INDUSTRIAL ESTATE,RAJKOT,RAJKOT PIN-360001
PH :0281-9925311011.

254.* UNIVERSE AUTO (5544), C/O DELHI GUJARAT TRANSPORT,NR. NAVAGAM,OCTROI POINT, AHMEDABAD HIGHWAY,RAJKOT, DISTIRCT - RAJKOT,GUJARAT PIN-380002
PH :0281-2705643/9879616643.

RAJPIPLA

255.## R. N. MOTORS (5255), 22-GIDC NEAR PETROL PUMP,RAJPIPLA,DISTRICT - NARMADA,GUJARAT PIN-393145
PH :02640-220549/9925325300.

SAVARKUNDLA

256.## SHYAM MOTORS (5961), OPP. ESSAR PETROL PUMP,AMRELI ROAD, SAVARKUNDLA,DISTRICT-AMRELI,GUJARAT PIN-364515
PH :02845-9722222923.

SIDDHPUR

257.## GOOD LUCK MOTORS (5341), 2.UMIYA COMPLEX .NEAR GURUKUL,HIGH SCHOOL SIDDHPUR,DISTRICT - PATAN,GUJARAT PIN-384151
PH :02767-9428665131.

SIHOR

258.# MOMAI MOTORS (6032), NR. RAJ MOMAI PETROLIUM,BHAVNAGAR-RAJKOT HIGHWAY,SIHOR,DISTRICT-BHAVNAGAR,GUJARAT PIN-364240
PH :-9909521980.

SILVASSA

259.## SHREE KRISHNA MOTORS (5374), PLON NO.43.66 KVA ROAD AMLI,SILVASSA,DISTRICT -(UT),GUJARAT PIN-396230
PH :-9904707111 / 9904707123.

SURAT

260.## EMPEROR CAR TECH (1748), F.PLOT NO.124 NEAR RELIANCE COMPLEX,BESIDE SHEETAL MARBLE,SURAT-DUMAS ROAD PIPLOD,SURAT PIN-395007
PH :0261-9825033396.

261.## SEIKON MOTORS (3161), PLOT NO.49,50,51 SAI ASHISH INDL. ESTATE,NEAR BAMROLI BRIDGE,120 FT. BAMROLI ROAD,SURAT (GUJARAT) PIN-359002
PH :0261-9426149996.

262.** PATEL MOTORS (3060), 64 BAJRANG NAGAR,NEAR OCTROI CHECK POST,NANA VARCHA,SURAT PIN-395006
PH :0261-9909149498.

263.* J.K.MOTORS (5158), LUHAR MOHALLA .POSTT PALGAM,DISTRICT - SURAT,SURAT,GUJARAT PIN-394510
PH :0261-9979865551.

264.* TARUN MOTORS (5254), PLOT NO.A-10/14.ROAD NO.4,MAHATMA GANDHI ROAD.UDYOG NAGAR,UDHNA - SURAT,GUJARAT PIN-394210
PH :0261-9712976141.

265.* NILESH MOTORS (5347), PLOT NO.21/23 PARAS INDUSTRIAL ESTATE,NEAR GAJERA CIRCLE, KATARGAM, SURAT,DISTRICT - SURAT,GUJARAT PIN-395004
PH :0261-2481836, 9377162654.

SURENDERANAGAR

266.## ADIT MOTORS (1247), 504/B PHASE-III,G.I.D.C. WADHWAN CITY,SURENDRANAGAR PIN-363035
PH :02752-9825228205.

TALALA

267.* RUBY MOTORS (5942), SASAN ROAD,OM NAGAR,TALALA,DISTRICT-JUNAGADH,GUJARAT PIN-362150
PH :02877-9426975022.

UMBERGAON

268.## KARAN AUTOMOBILES (2571), OPP. DAMRU WADI,UMBERGAON SANJAN ROAD,UMBERGAON DIST. VALSAD,GUJARAT PIN-396170
PH :0260-9826336583.

UNJHA

269.## AMBIKA MOTORS (3932), SADGURU COMPLEX,AHMEDABAD PALAM PUR HIGHWAY ROAD,UNJHA,MEHSANA PIN-384170
PH :-9824517382.

VADALI

270.# VRAJ MOTORS (4560), UMIYA PARK, HIGHWAY ROAD,VADALI TA,VADALI,SABARKANTA (GUJARAT) PIN-383235
PH :02778-220109 / 9427364109.

VADGAM

271.# CHAUDHARY & CHAUDHARY MOTORS (5651), OPP.RELIANCE PETROL PUMP,PALAMPUR ROAD - VADGAM,DISTRICT - BANASKANTHA,GUJARAT PIN-385001
PH :02793-9925457783.

VADODARA

272.## MAYUR SERVICE STATION (2224), NEAR POLICE STATION,PRATAPNAGAR ROAD,BARODA PIN-390004
PH :0265-9879453031.

273.** CAR CARE (2229), NEAR GANDHI OIL MILL,GORWA INDUSTRIAL ESTATE,BARODA PIN-390016
PH :0265-9227106915.

274.** HONEST AUTO STRUCTURE WORKS (279), NEAR SURAZ PLAZA,EAST OF JETALPUR RAILWAY UNDERBRIDGE,SAYAJI GUNJ,BARODA PIN-390005
PH :0265-9824014046.

275.* GENERAL MOTOR REPAIRING WORKS (2529), NEAR LOK SATTA PRESS,NAGARWADA,VADODARA PIN-390001
PH :0265-9825026106.

276.## DREAM MACHINES (2933), 19 MULJINAGAR COLONY,OPP. GHELANI PETROL PUMP,NIZAMPURA,VADODARA PIN-390002
PH :0265-9913420202 / 7575809939.

** A-Category Mass : Free & paid Service, Major repairs & Accidental repairs

C-Category Mass : Free & paid Service & Minor repairs

* B-Category Mass : Free & paid Service & Major repairs

D-Category Mass : Free Service & Minor repairs

277.* CAR CLINIC (4640), PLOT NO. B-7 (PART),ANUR ESTATE,NEAR DABHOI ROAD, JAKATNAKA,VADODARA (GUJARAT) PIN-390004 PH :0265-9925003558.

VALIA

278.## HARI OM AUTO CARE (5750), NEAR MAZDA HOTEL - VALIA,ANKALESHWAR ROAD-VALIA,DISTRICT-BHARUCH,GUJRAT PIN-393135 PH :-9427336094.

VALSAD

279.* HONEST AUTO GARAGE (2220), SUGHAR FALIA,BEHIND MOTA GHANCHIWAD,VALSAD (GUJARAT) PIN-396001 PH :02632-9925055600 / 9426110767.

VANTHLI

280.* INFINITY MOTORS (5963), 'RAVI RATAN'VADLA FATAK,OPP.HP PETROL PUMP ,POST VADLA, TAL VANTHLI,DISTRICT-JUNAGADH,GUJARAT PIN-362205 PH :-9737521899.

VAPI

281.* H.V. MOTORS (5047), NEAR BILL KHADI,NH-8.BALITHA,APL,DISTRICT - VALSAD PIN-396191 PH :0260-9824145599 / 9824405599.

VIRAMGAM

282.## KRISHNA MOTOR GARAGE (4038), OUTSIDE BHARWADI GATE,NEAR BHARAT PETROL PUMP,VIRAMGAM PIN-382150 PH :02715-9426415274 / 9016726604.

VYARA

283.# PARTH MOTORS (5240), D-1.CITY LIGHT TOWER KAKRAPAR,BYPASS ROAD-VYARA,DISTRICT-SURAT,GUJARAT PIN-394650 PH :02626-221284/9898292020.

HARYANA

AMBALA

284.** RAVI MOTORS (1957), 125 STAFF ROAD,HOTEL SAVOY,AMBALA CANTT PIN-126102 PH :-9315110209/9416640012.

285.** GURU NANAK MOTORS (2036), POLICE LINES CHOWK,AMBALA CITY PIN-134003 PH :0171-2551645/2517061/9416155906.

286.## HIRA MOTORS (2740), 207 MILE STONE,VASANT VIHAR GT ROAD,N.H. -1,AMBALA CITY PIN-134003 PH :-9255285212.

287.## BASSAN MOTORS (4964), 99 TH MALL,AMBALA CATT,HARYANA PIN-133001 PH :-9466000000.

BADHARA

288.* S.S MOTORS (5735), NEAR REST HOUSE,BADHARA,DISTRICT-BHIWANI,HARYANA PIN-123308 PH :-9255141288/9812451052.

BAHADURGARH

289.## GL AUTOMOBILES (5263), MAIN ROHTAK ROAD,SANKHOL OPP CH. DEVI LAL PARK,DISTRICT - BAHADURGARH,HARYANA PIN-124507 PH :01276-9416303473.

BARARA

290.## LUXMI AUTOZONE (5334), VPO BARARA,DISTRICT - AMBALA,HARYANA PIN-133203 PH :-09467116785.

BARWALA

291.** FAQIR CHAND QUALITY FUELS (5435), KILLA NO.20 L.H.S. NH-65,CHANDIGARH ROAD - BARWALA,DISTRICT - HISAR,HARYANA PIN-125001 PH :-9215027000.

BHIWANI

292.## VEER MOTOR WORKSHOP (1850), 24 NEW MOTOR MARKET,BHIWANI,(HARYANA)PIN-127021 PH :-9416057857.

BHUNA

293.* MITTAL AUTOMOBILES (5748), NEAR BUS STAND ,JAKHAL ROAD - BHUNA,DISTRICT-FATEHABAD,HARYANA PIN-125111 PH :-9813207221.

FARIDABAD

294.** INSUH AUTO ENGINEERS P. LTD. (377), 13/3 MAIN MATHURA ROAD,(ADJOINING FRICK INDIA),FARIDABAD PIN-121003 PH :0129-2272587, 2272484, 9810135516.

295.## KHURANA AUTOMOBILES (2863), 3C/60 B.P. (OPPOSITE ESI HOSPITAL),N.I.T.,FARIDABAD PIN-121001 PH :0129-4056020, 4056021.

296.## SARASWATI AUTOMOBILES (4465), 44 B.P,NEELAM BATA ROAD,N.I.T,FARIDABAD PIN-121001 PH :0129-4029665, 2429665/9811446686.

297.## BALAJI SERVICE STATION (4956), SECTOR 23-24, MAIN ROAD,NEAR BALAJI DHARM KATA,FARIDABAD,HARYANA PIN-121004 PH :0129-9818700422/4100265.

298.** PERFECT AUTOZONE (P). LTD. (5667), VILLAGE ANKHIR, OPP. SEC 21D,MAIN BADHKAL ROAD,DISTRICT - FARIDABAD,HARYANA PIN-121001 PH :0129-2460020/2460030.

299.## AUTO ENGINEERS (5350), 131.DLF INDUSTRIA AREA PHASE-1,DISTRICT - FARIDABAD,HARYANA PIN-121001 PH :0129-9810004318/9312524511/4124511.

FARRUKHNAGAR

300.** M R MOTORS (5946), GURGAON-JHAJJAR ROAD, OPP. ANAAZ MANDI,FARRUKHNAGAR,DISTRICT-GURGAON,HARYANA PIN-123506 PH :-9810831200.

FATEHABAD

301.## DHINGRA AUTOMOBILES (1856), G.T. ROAD,FATEHABAD,(HARYANA) PIN-125050 PH :-9416049167.

302.## INDORA MARUTI SERVICE STATION (3064), BHATTU ROAD,FATEHABAD,(HARYANA) PIN-125050 PH :01667-9812325457.

GANAUR

303.## SITA AUTOMOBILES (4260), 347, WARD NO. 10,BST ROAD,GANAUR,DISTT- SONEPAT PIN-131101 PH :0130-9416062747.

GANGWA

304.** PANCHMUKHI AUTOMOBILES (5968), HISSAR RAJGARH ROAD,GANGWA,DISTRICT-HISSAR,HARYANA PIN-125001 PH :-9728100029/9255562564.

GOHANA

305.## KRISHNA MOTORS (4132), ROHTAK ROAD,GOHANA PIN-131301 PH :01263-9416013596.

GURGAON

306.## GANGA MOTORS (363), SHIVPURI,GURGAON PIN-122001 PH :0124-2314940/2322084/9810306028.

307.** SOMESH AUTOMOBILES (455), SHIVALAYA,A-56 ROAD PHASE-I,DLF QUTAB ENCLAVE,GURGAON PIN-122002 PH :0124-4055275/2352162/9213094482-83.

308.** QUTAB AUTOMOBILES (3668), BEHIND SUSHANT LOK-I,POLICE POST NEAR RIDGEWOOD,DLF PHASE-IV,GURGAON PIN-122002 PH :0124-2385333/92267334/4046658-59/9811687333.

309.## TOP GEAR AUTOMOTIVE ENGINEERS (4464), MAIN JHARSA ROAD,GURGAON,(HARYANA) PIN-122003 PH :0124-4039011, 9810304011, 9891439407.

310.## A & A ENTERPRISES (4639), 396,PHASE-IV,UDYOG VIHAR,GURGAON (HARYANA) PIN-122001 PH :0124-2399862, 63, 9312063450/9868599812.

311.## RAJASTHAN AUTO WORKS (4760), LT. ATUL KARATIA MARG, NEAR PETROL PUMP,AKASHI FILLING STATION,AMAN PURA, SECTOR-5 ROAD,GURGAON (HARYANA) PIN-122001 PH :0124-2300238/9211819420/9810058722.

312.## MANISH AUTOMOBILES (4777), GHATA ROAD,WAZIRABAD, NEAR SECTOR-56,GURGAON,HARYANA PIN-122001 PH :0124-9873243858/9899561595/9899475288.

313.* KUMAR AUTOMOBILES (4848), BEHRAAMPUR ROAD,NEAR NH-8,GURGAON,HARYANA PIN-122001 PH :0124-9873431696/2215696/9873448804.

314.## S G MOTORS (5756), PLOT NO.494, SECTOR 37,PACE CITY II,VUDYOG VIHAR VI - GURGAON,DISTRICT-GURGAON,HARYANA PIN-122001 PH :0124-9910955113.

315.## SRI PARKASH AUTOMOBILES (5862), BAJGHERA ROAD, NEAR PARKASH PURI ASHRAM,NEW PALAM VIHAR,DISTRICT-GURGAON,HARYANA PIN-122001 PH :-9899157729.

316.** SEVEN HILL SERVICE STATION (6038), VIJAY VIHAR, MAIN SILOKHRA ROAD, SEC-30,GURGAON,HARYANA PIN-122002 PH :-9810602354.

HANSI

** A-Category Mass : Free & paid Service, Major repairs & Accidental repairs

C-Category Mass : Free & paid Service & Minor repairs

* B-Category Mass : Free & paid Service & Major repairs

D-Category Mass : Free Service & Minor repairs

MARUTI AUTHORISED SERVICE STATIONS (MASS) (AS ON 01.04.2017)

317.** VIKAS AUTOMOBILES (4744), SHANTI NIKETAN,OPP. JIND BYE PASS, G.T. ROAD,HANSI,DISTRICT-HISSAR (HARYANA) PIN-125001
PH :01663-9466248037.

HISSAR

318.* PALCO MOTOR GARAGE (4739), 96 AUTO MARKET,HISSAR,HARYANA PIN-125001
PH :01662-9896303233.

319.** SALASAR AUTO (4735), OPP. VIDYUT NAGAR GATE NO. 2,DELHI ROAD,HISSAR,HARYANA PIN-125001
PH :01662-9355486716.

320.* SAI AUTOMOBILES (5267), MAIN DELHI ROAD.HISSAR,HARYANA PIN-125001
PH :01662-9812900046.

HODAL

321.## VED MOTORS (2247), HIGHWAY ROAD,NEAR RAILWAY STATION CHOWK,HODAL,(FARIDABAD) PIN-121106
PH :01275-236238/9255456907.

INDRI

322.## ASHOKA MOTOR (6041), OPP. PARTAP FILLING STATION,LADWA ROAD,TEHSIL-INDRI,DISTRICT-KARNAL,HARYANA PIN-132041
PH :-9896234001.

ISMAILABAD

323.* VINAYAK MOTORS (6052), OPP. MAHARAJA PALACE,AMBALA HISSAR ROAD,ISMAILABAD,HARYANA PIN-136129
PH :-9416250081/9996045636.

ISRANA

324.## SHIV DARSHAN AUTOMOBILES (6051), ISRANA PANIPAT ROAD,NR. NC COLLEGE, ISRANA,DISTRICT-PANIPAT,HARYANA PIN-132103
PH :-9911366230.

JHAJJAR

325.## VASUNDHRA MOTORS (1467), REWARI ROAD,JHAJJAR,(HARYANA) PIN-124103
PH :-9812012180.

JIND

326.## MOHIT MOTORS (1574), SAFIDON GATE,JIND PIN-126102
PH :-9355129844.

KAITHAL

327.## HIND AUTOMOBILES (1858), AMBALA ROAD,KAITHAL PIN-136027
PH :-3496,2416 (RES.).

KANINA

328.## SHREE KRISHNA MOTORS (5953), BHOOP SINGH MARKET, NEAR PETROL PUMP,MAHINDERGARH ROAD, KANINA,DISTRICT-MAHINDERGARH,HARYANA PIN-123027
PH :-9467641678.

KARNAL

329.** RUBY MOTORS (4734), 28/3 HSIDC,NEAR NAMASTEY CHOWK INDUSTRIAL AREA,KARNAL,HARYANA PIN-132001
PH :0184-9896345633.

KHARKHODA

330.* PRANAV MOTORS (5771), SAMPLA ROAD, KHARKAUDA,DISTRICT-SONEPAT,HARYANA PIN-131402
PH :-09896145161.

KUNDLI

331.## SHIV SHAKTI AUTOMOBILES (4628), JANTI ROAD,NEAR S.P. COLD STORAGE,KUNDLI,HARYANA PIN-131028
PH :-9811047480.

KURUKSHETRA

332.## KARTAR MOTORS (1645), RED ROAD,KURUKSHETRA PIN-132118
PH :01744-9896245900.

333.## SAINI MOTORS (2131), G.T. ROAD,UMRI CHOWK,KURUKSHETRA,(HARYANA) PIN-136118
PH :01744-9896183931.

334.** KARTAR MOTORS (5349), PLOT O 65-66,SECTOR -2,HUDA INDUSTRIAL,AREA KURUKSHETRA PIN-132118
PH :01744-221343.

LOHARU

335.## BHAWNA MOTORS (6028), BHIWANI ROAD,LOHARU,DISTRICT-BHIWANI,HARYANA PIN-127201
PH :01251-9466117900/217239.

MAHENDERGARH

336.## SHREE SHYAM MOTORS (5843), NEAR I.O.C PETROL PUMP,MAHENDERGARH,DISTRICT-MAHENDERGARH,(HARYANA) PIN-123029
PH :01285-222020/9416065855.

MANDI ADAMPUR

337.## MITTAL AUTO AGENCIES (2966), 113-15 AUTO MARKET,MANDI ADAMPUR,(HARYANA) PIN-125052
PH :01669-43300.

MANESAR

338.## MAITRI SERVICE STATION (2378), N.H.8,DELHI-JAIPUR ROAD,MANESAR (GURGAON) PIN-122001
PH :0124-2290349/9212017293/9911104120.

NARNAUL

339.## SHYAM AUTO TRADE (1571), SINGHANA ROAD,NARNAUL,(HARYANA) PIN-123001
PH :01282-251605/251620/9466432785.

NILOKHERI

340.## SURENDERA MOTORS (5049), NEW NEHSIL ROAD. NILOKHERI,DISTRICT KARNAL,NILOKHERI,HARYANA PIN-132117
PH :-9996308730.

PALWAL

341.** D.K. & R.K. MOTORS (1159), NEAR BUS STAND,BYE-PASS ROAD,PALWAL,(HARYANA) PIN-121102
PH :01275-252647/251816.

342.* SHEELA MOTORS (5141), OPP MUNICIPAL COUNCIL OFFICE,G T ROAD,DISTRICT - FARIDABAD,HARYANA PIN-121102
PH :01275-9416066251/401501.

PANCHKULA

343.** PANCHKULA AUTO SERVICES (1949), PLOT NO.300,PHASE-II INDUSTRIAL AREA,PANCHKULA,(HARYANA) PIN-134109
PH :-9915230196.

PANIPAT

344.** PREM MOTORS (2266), PLOT NO.134,SECTOR 25 INDUSTRIAL AREA,PANIPAT PIN-132103
PH :01742-9416438046.

PATAUDI

345.## SHUBHAM AUTOMOBILES (4641), REWARI ROAD,PATAUDI,DISTT. GURGAON PIN-122503
PH :0124-2672942, 9812665240.

PEHOWA

346.* AMAR AUTOMOBILES (2270), OPP. DAV COLLEGE,AMBALA ROAD,PEHOWA DISTT. KURUKSHETRA,(HARYANA) PIN-136128
PH :-9896002974.

RADAUR

347.* SHRI SHIVAM AUTOMOBILES (5852), S.K. ROAD, OPP. ESSAR PETROL PUMP,RADAUR,DISTRICT-YAMUNANAGAR,HARYANA PIN-135133
PH :135133-9255952717.

RANIA

348.## SINGLA MOTORS (3779), NEAR BUS STAND,RANIA,DISTT. SIRSA (HARYANA) PIN-125076
PH :01698-9416011238.

REWARI

349.## GAUTAM MOTORS (1837), NARNAUL ROAD,REWARI (HARYANA) PIN-123401
PH :01274-22895/222395/325095.

350.* SHIVAM SERVICES (1466), OPP. CENTRAL SCHOOL,GARHI BOLNI ROAD,REWARI PIN-123401
PH :01274-254825/9416288341.

351.## PULYANI MOTORS (4663), BEHIND KAMLA PALACE,CIRCULAR ROAD,REWARI,HARYANA PIN-123401
PH :01274-9416064738/ 252238/ 257938/9955963168.

SADHAURA

352.## SHREE GANESH MOTORS (5959), NEAR INDIAN OIL PETROL PUMP,KALA AMB ROAD,SADHAURA,DISTRICT-YAMUNANAGAR,HARYANA PIN-133204
PH :-9813376260.

SHAHABAD

353.** MAHALAXMI MOTORS (354), LADWA ROAD,SHAHABAD MARKANDA,(HARYANA) PIN-136135
PH :-42433,41933.

SIWANI

354.## GANESH AUTOMOBILES (5931), LOHARU MORH,SIWANI,DISTRICT-BHIWANI,HARYANA PIN-127046
PH :-9812022020.

SOHNA

355.** SHRI SHYAM MOTORS (5951), OPP.RAGHUNANDAN PETROL PUMP,NEAR GD GOENKA INTERNATIONAL SCHOOL,SOHNA,HARYANA PIN-122103
PH :-9582350079.

SONIPAT

356.## NEW HIGHWAY MOTORS (5055), MAIN DELHI ROAD,SONEPAT,HARYANA PIN-131001
PH :-09812530120, 2234999.

TAURU

** A-Category Mass : Free & paid Service, Major repairs & Accidental repairs

* B-Category Mass : Free & paid Service & Major repairs

C-Category Mass : Free & paid Service & Minor repairs

D-Category Mass : Free Service & Minor repairs

357.## R M MOTORS (5842), WADE NO:4 BEHIND WINE SHOP MAIN REWARI SOHNA ROAD,TAURU,DISTRICT-MEWAT,HARYANA PIN-122105
PH :-9812378663.

TOHANA

358.## DHANDA MOTORS (2271), PLOT NO.4,RATIA ROAD,TOHANA,DISTT. FATEHABAD PIN-125120
PH :-20368.

TOSHAM

359.## MOHINI AUTOMOBILES (6026), OPP.NEW ANAJ MANDI,NEAR MINI BANK,TOSHAM,DISTRICT-BHIWANI,HARYANA PIN-127040
PH :-9215959995/9992251000.

UKLANA

360.* SHREE GANESH MOTORS (5747), PLOT NO#29,UKLANA MANDI,DISTRICT-HISSAR,HARYANA PIN-125113
PH :-98123091531.

YAMUNANAGAR

361.** GOPAL AUTOMOBILE SERVICE STATION (1874), NEAR LAL DAWARA,JAGADHRI ROAD,YAMUNANAGAR PIN-135001
PH :01732-21067.

HIMACHAL PRADESH

ALAMPUR

362.## SUBH AUTOMOBILES (5964), SH-39,ALAMPUR,DISTRICT-KANGRA,HIMACHAL PRADESH PIN-176110
PH :-9805751228/9418006656.

AMB

363.## SHUBHAM MOTORS (5933), NEAR PINDI ASHRAM,HAMIRPUR ROAD,AMB,DISTRICT-UNA,HIMACHAL PRADESH PIN-177203
PH :-9418114176.

ANNI

364.## SARAJ AUTO WORLD (6044), VERMA BUILDING,NR. NAGAN HARIPUR,TEHSIL,ANNI,DISTRICT-KULLU,HIMACHAL PRADESH PIN-172026
PH :-9129065065/9817120002.

BADDI

365.** LAJ MOTORS (5541), 436.MAUJA SURAJ.MAJRA LABANA,BADDI,DISTRICT - SOLAN,HIMACHAL PRADESH PIN-174101
PH :-9218644189.

BANGANA

366.## TRISHLA AUTOMOBILES (5869), VILLAGE BPO & TEHSIL BANGANA,BANGANA,DISTRICT-UNA,HIMACHAL PRADESH PIN-174307
PH :-9817332462.

BANOI

367.## BAWA SERVICE STATION (4634), VILL BANOI,TEH SHAHPUR P.O.,BANOI,DIST KANGRA (HIMACHAL PRADESH) PIN-176206
PH :-9418051290, 9418105642.

BARMANA

368.## AVER AUTO (5955), VILLAGE LAGAT,TEHSIL SADAR,PO BARMANA,HIMACHAL PRADESH PIN-174013
PH :-9418064130.

BHAMBLA

369.* DHIMAN MOTORS (3837), PLOT NO. 42,INDUSTRIAL AREA, BHAMBLA,JAHU,DISTT MANDI PIN-175004
PH :01972-263676,256436.

BHUNTAR

370.## HANDA MOTORS (4262), HANDA COMPLEX,NEAR AIRPORT,BHUNTAR,KULLU (H.P) PIN-175125
PH :01902-265729, 265124.

BILASPUR (H.P)

371.## BHASKAR AUTO SPARE & SERVICE (1730), 8-B ROURA SECTOR II,(NEAR DURGA MANDIR),BILASPUR (H.P.) PIN-174001
PH :-23335.

CHAMBA

372.## KAILASH SERVICE STATIION (3527), AMRIT NIWAS MOHALLA,BONGUTA,CHAMBA TOWN,DISTT.CHAMBA PIN-176209
PH :01899-24485.

373.* AUTOZONE (5247), PATHANKOT RAOD, PAREL,SULTANPUR - CHAMBA,DISTRICT - CHAMBA,HIMACHAL PRADESH PIN-176314
PH :-9418214848.

DARLAGHAT

374.## CHANDEL SERVICE STATION (5233), DARLAGHAT,DISTRICT-SOLAN,HIMACHAL PRADESH PIN-171102
PH :-9816039865.

DEHRA

375.* WALIA ENTERPRISES (4252), HANUMAN CHOWK,NEAR DEHRA BRIDGE,DEHRA,DISTT. KANGRA PIN-177101
PH :01970-233184, 233751.

DHARAMSALA

376.## EAGLE MOTOR SERVICE STN. (6426), SHAM NAGAR,DHARAMSALA (HIMACHAL PRD.) PIN-176215
PH :-22032.

377.## SHIV SHAKTI CAR CARE (1277), NEAR RAINBOW SCHOOL,DARI ROAD,DHARAMSHALA PIN-176057
PH :-24056.

378.## HIM AUTO STATION (3773), VPO DARI,DHARAMSHALA,(H.P.) PIN-176061
PH :01892-23055.

GAGGAL

379.* CHAUDHARY SERVICE STATION (1966), GAGGAL (ICHHI),DISTT. KANGRA (H.P.) PIN-176209
PH :1892-265184.

GHUMARWIN

380.## BHASKAR AUTO SPARES & SERVICES (5147), VILLAGE KULARU,GHUMARWIN,DISTRICT - BILASPUR,HIMACHAL PRADESH PIN-174101
PH :-9817011700.

GUMMA

381.## CHAUHAN ENTERPRISES (5660), VILLAGE GUMMA,TEHSIL KOTKHAI,GUMMA,DISTRICT - SHIMLA,HIMACHAL PRADESH PIN-171202
PH :-9816125191.

JAWALA JI

382.## SRI PARBHAT MOTORS (5036), VPO & TEHSIL, JAWALI-(BHANEI),DISTRICT - KANGRA,(HIMACHAL PRADESH) PIN-176029
PH :-09816302881,09418004143.

JAWALAMUKHI

383.## LAKSHMI AUTO SPARES & SERVICE CENTRE (4630), NEAR GANJU BAGH, DEHRA ROAD,JWALAMUKHI,TEH. DEHRA,DIST. KANGRA (HIMACHAL PRADESH) PIN-171001
PH :01970-223018, 9418091048.

KARSOG

384.## DEEPAK AUTOMOBILES (4057), MR. DEEPAK SHARMA,C/O SHARMA GENERAL STORE,KARSOG, MAIN BAZAR,DIST MANDI, HIMACHAL PRADESH PIN-171304
PH :01907-222242, 9816260061.

KAZA

385.## SPITI MOTORS (6033), VILL. & PO KAZA,DISTRICT-LAHAUL & SPITI,HIMACHAL PRADESH PIN-172114
PH :-9418758974.

KEYLONG

386.## YOLAX MOTORS (3830), KEYLONG,DISTT. LAHAUL & SPITI PIN-175132
PH :01900-22448, 22517.

KULU

387.## SURYA MOTORS & SERVICE CENTRE (2943), NH-21,MANALI ROAD,BABELI,DISTT. KULLU (H.P.) PIN-175138
PH :01902-30456.

388.## PURI BROTHER'S (4242), I.O.C DEALER,DHALPUR,KULU,H.P PIN-175101
PH :01902-222415/16.

KUMARHATTI

389.* SOLAN AUTOMOBILES PVT. LTD. (6420), DAGHOTA (SOLAN),P.O.KUMAR HATTI (H.P.) PIN-173229
PH :-66173.

KUMARSAIN

390.## RED LINE (5965), VILL. KEPU,PO KIRTI SAINZ,TEHSIL,KUMARSAIN,DISTRICT-SHIMLA,HIMACHAL PRADESH PIN-172030
PH :-9805996506.

MANDI

391.** BHAGWATI AUTOMOBILES (269), 13 INDUSTRIAL AREA,PHASE-III,SAULI KHAD,MANDI PIN-175 001
PH :-35289,35189.

MARANDA

392.## MODERN SERVICE CENTRE (1175), PUSHP COMPLEX,MARANDA,(H.P.) PIN-176102
PH :-630983.

MEHATPUR

393.## BUDHA AUTO HOUSE (6422), MAIN BAZAR,UNA,MEHATPUR (H.P) PIN-174315
PH :-64061,61766.

MUBARAKPUR

394.## SHIV SHAKTI AUTOMOBILES (1732), HOSHIARPUR ROAD,MUBARKPUR,DISTT. UNA,(H.P.) PIN-177202
PH :1976-64661.

NADAUN

395.** CAR CARE ENGINEERS (4423), HOSHIARPUR ROAD,MANPUL,NADAUN,DISTT HAMIRPUR (H.P) PIN-177033
PH :01972-232765, 9418096457.

NAHAN

** A-Category Mass : Free & paid Service, Major repairs & Accidental repairs

C-Category Mass : Free & paid Service & Minor repairs

* B-Category Mass : Free & paid Service & Major repairs

D-Category Mass : Free Service & Minor repairs

396.## AGARWAL MOTORS (3334), GUNNU GHAT,NEAR TELECOM COLONY,NAHAN PIN-173001
PH :01702-25679(O),23558(R).

NALAGARH

397.## KRISHNA MOTOR (5275), PEERTHAN.PO NALAGARH,DISTRICT - SOLAN,HIMACHAL PRADESH PIN-174101
PH :01795-223561.

PALAMPUR

398.** SANGRAI AUTO SERVICE (6430), OPP. SITLA MATA MANDIR,PALAMPUR,DISTT. KANGRA (H.P.) PIN-176061
PH :01894-32685.

399.## SANTOSHI AUTOMOBILES (4776), VILLAGE & P.O, BHAWARNA,TEHSIL,PALAMPUR,DISTRICT-KANGRA (HIMACHAL PRADESH) PIN-176061
PH :01894-9418184367.

PAONTA SAHIB

400.## SUMEET MOTORS (1441), SHAMSHERPUR,PAONTA SAHIB,(H.P.) PIN-173025
PH :-22264.

PAPROLA

401.## ABROL AUTOMOBILES (3470), RAJ KUMAR ABROL,V&PO BIR,TEH. BAIJNATH,DISTT. KANGRA (H.P.) PIN-176077
PH :01894-68517.

PARWANOO

402.## DIVYA SALES (6428), DIVYA BHAWAN VILL. KAMLI,SECTOR-1,PARWANOO PIN-173220
PH :-32685.

PATLI KUHAL

403.* JAMDAGNI MOTORS (760), VILLAGE PATLI KAUHAL,P.O.KATRAIN,DISTT. KULLU (H.P.) PIN-175129
PH :-9816040247,01902-40847.

RAJGARH

404.## RAJGARD AUTOMOBILES (5458), PO RAJGARH.TEH RAJGARH,DISTRICT - SIRMOUR,HIMACHAL PRADESH PIN-173101
PH :01799-221055.

RAMPUR BUSHAHR

405.** HIGHWAY SERVICE STATION (2649), CHUHA BAG,RAMPUR BUSHAHR,DISTT. SHIMLA,(H.P.) PIN-172001
PH :01782-34043.

406.## KRISHNA AUTOMOBILE (4438), VILL CHUHA BAG,RAMPUR BUSHAHR PIN-172001
PH :0177-233046, 233091.

RECONG PEO

407.## KRISH AUTO (4134), V.P.O. DUNI,RECONG PEO,TEHSIL KALPA,DISTT KINNOUR (HP) PIN-172107
PH :01786-226053, 226017.

ROHRU

408.## KAMTA SERVICE STATION (2338), ROHRU,DISTT. SHIMLA,(H.P.) PIN-171207
PH :01781-34430.

SALASHI

409.## THAKUR AUTOMOBILES (3838), JALANDHAR MANALI NATIONAL HIGHWAY (NH70),NEAR DAV SCHOOL,VILLAGE SALASHI,DISTT HAMIRPUR PIN-172108
PH :01972-223412,9818090904.

SARKAGHAT

410.## SHAKUNTLA MOTORS (5755), MANDI ROAD-SARKAGHAT,DISTRICT-MANDI,HIMACHAL PRADESH PIN-175024
PH :-9817818822.

SHIMLA

411.** GURRAJ AUTO SERVICE (757), BAMLOE CHOWK,SIMLA PIN-171001
PH :-6558.

412.** MOTO WORLD (6433), NAVBAHAR,SIMLA PIN-171002
PH :-72917.

SOLAN

413.## SOLAN SERVICE CENTRE (764), BYE PASS,NEAR PWD OFFICE,SOLAN PIN-173212
PH :-3149.

SUBATHU

414.## SHYAM AUTOMOBILES (4558), NEAR SHANTI FILLING STATION,V.P.O RADYANA,SUBATHU,DIST SOLAN (HIMACHAL PRADESH) PIN-173206
PH :0179-2275606.

SUNDERNAGAR

415.** V.M. SERVICE STATION (3777), CHAMUKHA,P O HARABAGH,NH-21,SUNDER NAGAR (H.P.) PIN-174402
PH :01907-262130.

THEOG

416.## JOSHI MOTORS (2778), SHALLI BAZAR,THEOG,DIST. SHIMLA,(H.P.) PIN-171201
PH :1783-9816140451, 8679440451.

UNA (HP)

417.## TRINITY AUTO FAST ENGINEERS (1755), RAKKAR COLONY,NANGAL ROAD,UNA (H.P.) PIN-174303
PH :01975-26520.

418.## RUDRA MOTORS (3925), NEAR OLD HOSPITAL CHOWK,NH-22,UNA (H.P.) PIN-174303
PH :01935-25137(SHOP), 25011 (RES.).

JAMMU & KASHMIR

AWANTIPORA

419.## KESAR AUTOMOBILES (5938), KHAR, MORH, NATIONAL HIGHWAY 1A,AWANTIPORA,DISTRICT-PULWAMA,JAMMU & KASHMIR PIN-192122
PH :-9419507495.

BARAMULA

420.* MARUTI MASTERS (4369), KANISPORA,BARAMULA,KASHMIR PIN-193101
PH :-990659944.

CHADOORA

421.* VEHICLE MASTERS (4661), MAIN ROAD,CHADOORA,DIST. BUDGAM,JAMMU & KASHMIR PIN-190001
PH :-9419475708.

JAMMU

422.** KWIK FIT (2343), AMBPHALLA,B.C. ROAD,JAMMU PIN-180001
PH :-9419182675.

423.** MOBEL GARAGES (441), NARWAL CHOWK,TRANSPORT NAGAR,JAMMU PIN-180007
PH :-9796800000.

424.** CHECK N CARE AUTOMOBILE CENTRE (1773), OPP. GURUDWARA SRI SINGH SABHA,NARWAL BYE PASS ROAD,JAMMU PIN-180006
PH :-9419190796.

425.* CARE POINT AUTOMOBILES (4652), OPP. BSF CAMPUS ROAD,AKHNOOR ROAD,JAMMU PIN-180002
PH :0191-9419283151.

426.## NATIONAL MOTORS (5074), OPP APNA VIHAR.B.P. PETROL PUMP,NH-1A KUNJWANI JAMMU,DISTRICT - JAMMU,JAMMU & KASHMIR PIN-180010
PH :-9419194368.

KARGIL

427.* ZOZILA ENGG. WORKS (374), KARGIL,LADAKH PIN-194103
PH :-9419176212.

KATHUA

428.* KATHUA MOTORS (3323), HATLI MORE,KATHUA,(J&K) PIN-184102
PH :-9419150136.

KATRA

429.## VIDYA AUTOMOBILES (1165), JAMMUR ROAD,KATRA JAMMU ROAD,KATRA,(J&K) PIN-182301
PH :01991-9419162339.

KISHTWAR

430.## MINTOO MOTORS (4133), NEAR H.H.P.C SCHOOL,KISHTWAR,DISTT DODA (J & K) PIN-180001
PH :01995-9419154100.

MATTAN

431.## DANISH AUTOMOBILES (5478), PAHAL GAM ROAD,STATE HIGHWAY - MATTAN,DISTRICT - ANANTNAG,JAMMU & KASHMIR PIN-192101
PH :01932-9419045672.

PHINTER

432.## BADYAL AUTOMOBILES (4149), C/O BADYAL AUTOMOBILE,PHINTER,TEH BILLAWAR,DISTT KATHUA PHINTER (J & K) PIN-184203
PH :01921-9419691916.

PULWAMA

433.** KASHMIR AUTOMOBILES (5352), SRINAGAR, SHOPIAN ROAD FRUIT MANDI,PULWAMA,DISTRICT - PULWAMA,JAMMU & KASHMIR PIN-192301
PH :01933-9906799324.

RAJOURI

434.## MILLENNIUM MOTORADES (2937), ALPHA GATE,T.C.P.,RAJOURI,(J&K) PIN-185132
PH :01962-9419329486.

REASI

435.## U LIKE CAR CLINIC (4771), GITA NAGAR,REASI JYOTIPURAM ROAD,REASI,DISTRICT-UDHAMPUR (JAMMU & KASHMIR) PIN-182101
PH :01991-9906015150.

SAMBHA

** A-Category Mass : Free & paid Service, Major repairs & Accidental repairs

C-Category Mass : Free & paid Service & Minor repairs

* B-Category Mass : Free & paid Service & Major repairs

D-Category Mass : Free Service & Minor repairs

436.## DHANSAR CAR CLINIC (5146), NATIONAL HIGHWAY,SUPWAL SAMBHA,DISTRICT - JAMMU,J&K PIN-184121
PH :-9419934151.

SOPORE

437.## HASSAN MOTORS (2434), BPC DEALER,SOPORE,KASHMIR PIN-193201
PH :-9419597727.

SRINAGAR

438.* SRINAGAR AUTOMOBILES (4925), M.A. LINK ROAD,NEAR TRANSPORT YARD BRIDGE,CHINARBAGH,SRINAGAR (JAMMU & KASHMIR) PIN-190001
PH :0194-9419001793.

439.## NEW NATIONAL AUTOMOBILES (5073), RAM BAGH. AIRPORT ROAD. SRINAGAR,DISTRICT - SRINAGAR,JAMMU & KASHMIR PIN-190009
PH :0194-9419909528.

440.* A.B. MOTORS (5072), BEHIND NEW SECRETARIAT ROAD,SRINAGAR,DISTRICT - SRINAGAR,JAMMU & KASHMIR PIN-190009
PH :0194-9419007966.

441.* HASEEN MOTORS (5249), BY-PASS BRIDGE, BAGH MEHTAB,SRINAGAR,JAMMU & KASHMIR PIN-190019
PH :0194-9419518416.

442.** ADAM'S AUTOAIDES (5766), SIDCO INDUSTRIAL EXTATE, SHALTENG,SRINAGAR,DISTRICT-SRINAGAR ,JAMMU & KASHMIR PIN-190001
PH :0194-99065800893.

SURNKOTE

443.## A.S. AUTOMOBILES (5976), IQBAL NAGAR, SURANKOTE,DISTRICT-POONCH,JAMMU & KASHMIR PIN-185121
PH :-9469014765.

THANA MANDI

444.## DANISH AUTOMOBILES (6047), R/O W NO.3, HUSPLATE,THANAMANDI,DISTRICT-RAJOURI,JAMMU & KASHMIR PIN-185212
PH :-9858938248.

VIJAYPUR

445.## BANSI LAL MARUTI SERVICE STATION (4748), SWANKHA MORH,NATIONAL HIGHWAY,VIJAYPUR,DISTRICT-SAMBA (JAMMU & KASHMIR) PIN-180001
PH :01923-9419106798.

JHARKHAND

BOKARO

446.## UUEA AUTOMOBILES (4845), S-21 CITY CENTRE,BOKARO STEEL CITY,BOKARO,JHARKHAND PIN-827004
PH :06542-9431127441.

DEOGHAR

447.* GARGEE AUTOMOBILE (2276), OPP. D.C. RESIDENCE,CIRCULAR ROAD,BARMASIA,DEOGHAR(BIHAR) PIN-814112
PH :06432-9431132526.

DHANBAD

448.## MAJUMDAR CAR SCAN (5135), BHUFORCE, K G ASHRAM ROAD,SARAIDELA,DISTRICT - DHANBAD,JHARKHAND PIN-828301
PH :0326-9835361472.

449.## PRIYA AUTO (4868), OPPOSITE MINNING SCHOOL,SINDRI ROAD, BHAGA,DHANBAD,JHARKHAND PIN-828301
PH :0326-9431124817.

DUMKA

450.* NATIONAL ENGG. WORKS (5220), AUTOMOBILE ENGINEERS,DUMKA (BIHAR),DUMKA (BIHAR) PIN-814101
PH :06434-222325.

GARHWA

451.## VIKAS AUTOMOBILE SERVICES (2647), RAILWAY STATION ROAD,GARHWA,ZARKHAND PIN-822114
PH :06561-9204527287.

HAZARIBAGH

452.## ALOK MOTORS (379), NEAR INDRAPURI CHAWK,HAZARIBAG,(BIHAR) PIN-825301
PH :06546-9431140740.

453.## SRI RAM MARUTI SERVICE STATION (3663), DEVI DAYAL LANE,HAZARIBAG,(JHARKHAND) PIN-825301
PH :06546-9431384877.

JAMSHEDPUR

454.** CAR CURE (1261), C/O MODERN AUTO STORES,KALIMATI ROAD,SAKCHI,JAMSHEDPUR PIN-831001
PH :0657-6452965.

455.## MAHESHWARI BROS. (5124), NATIONAL HIGHWAY 33,BALIGUMA MANGO,P.O. -M.G.M. MEDICAL COLLEGE,JAMSHEDPUR PIN-831018
PH :0657-9031144444.

KHUNTI

456.## MOD MOBILES (5579), MAIN ROAD, RANCHI ROAD - KHUNTI,DISTRICT - KHUNTI,JHARKHAND PIN-835210
PH :-9006055883.

MAITHON

457.# MAITHON SERVICING CENTRE (5838), MAITHON ROAD, NEAR VMC COLONY,SANJAY CHOWK ,PO CHIRKUNDA-MAITHON,DISTRICT-DHANBAD, (JHARKHAND) PIN-828207
PH :-7209423707.

PAKUR

458.## SPEED WHEEL SERVICE CENTRE (4976), MAIN ROAD,PAKUR PIN-816107
PH :-9434101917.

RAMGARH

459.## RAHIL MOTORS (5054), C/O NIYAMAT MISTRI,DUSHAD MOHLA,DISTRICT RAMGARH CANTT PIN-829122
PH :-9835324514.

460.## SAINI MOTORS (5126), NEAR VISWAKARMA MANDIR,MAIN ROAD,RAMGARH CANTT,DISTT. HAZARIBAG PIN-829122
PH :06553-223699.

RANCHI

461.## BHARAT MOTORS (5970), SHIV JEE CHOWK, HARU ROAD,RANCHI,DISTRICT-RANCHI,JHARKHAND PIN-834001
PH :-9608502258.

462.** MARUTI AUTOMOBILES (5127), HOTEL AKASHWANI MANSION,RATU ROAD,RANCHI PIN-834001
PH :0651-9835156186.

463.## MARUTI CLINIC (2548), LAL KOTHI,OLD HAZARIBAGH ROAD,KANTA TOLI,RANCHI (BIHAR) PIN-834001
PH :0651-9431109214.

464.## MOTOR KRAFT (4769), H.B. ROAD,DIPA TOLI,RANCHI,JHARKHAND PIN-834009
PH :0651-3254965/3203666.

SIDRAUL

465.## KIRTIVASA AUTOMOBILES PVT. LTD. (4424), RANCHI TATA HIGHWAY,SIDRAUL,P.S NAMKOM PIN-834001
PH :0651-9334657490.

KARNATAKA

ATHANI

466.## CHOUGULE MOTORS (3874), HALYAL ROAD,ATHANI,DISTT BELGAUM PIN-591304
PH :08289-52992.

BAGALKOT

467.## NARA AUTOMOBILES (4357), TP NO. 158 A/2,WARD NO. 10,SHABADI COMPOUND EXTN,BAGALKOT PIN-587101
PH :08354-424092/ 423178/ 9448124093/9880875595.

BAGEPALLI

468.# N.N. GARAGE (4263), T.B. CROSS,NH-7, BAGEPALLI,NEAR RTO OFFICE,KOLAR DISTRICT, KARNATAKA PIN-561207
PH :-9845125260.

BAILHONGAL

469.# MAHANTH MOTORS (5763), RTO ROAD BAILHONGAL ,TALUK,DISTRICT-BELGAUM,KARNATAKA PIN-591102
PH :-9900255566.

BALEHONNUR

470.## SRI ANNAPOORNA MOTORS (5253), MALLE GOWDA COMPLEX,JAYAPURA,ROAD BALEHONNUR ROAD,DISTRICT - CHIKAMAGALUR,KARNATAKA PIN-577112
PH :577112-9449620366.

BANGALORE

471.** ANEKAR MOTORS (227), 230 MAGADI ROAD,BANGALORE,(KARNATAKA) PIN-560023
PH :080-3353766,3354339 FAX:3402104.

472.** MARS ENTERPRISES PVT. LTD. (238), NO.41 SANJAY NAGAR MAIN ROAD,ASWATH NAGAR,BANGALORE PIN-560094
PH :080-3418158/9408023513/9448358884.

473.* MAYUR ENTERPRISES (249), NEXT TO PIA BHAVAN KIADB MAIN ROAD,PEENYA 1ST STAGE,BANGALORE PIN-560058
PH :080-8395263.

474.* GIRIMAJI ENTERPRISES (258), NO.2 27TH CROSS,K R ROAD,B S K II STAGE,BANGALORE PIN-560070
PH :080-6549042,6540502.

475.* SATHNUR SERVICE STATION (1153), 2ND MAIN KHB COLONY,GANDHI NAGAR,YELAHANKA,BANGALORE PIN-560064
PH :080-8562995/9845038372.

476.** PACE AUTOMOBILES (1057), 6TH MAIN HMT LAYOUT,R.T. NAGAR,BANGALORE PIN-560032
PH :080-23432173/23332338.

** A-Category Mass : Free & paid Service, Major repairs & Accidental repairs

C-Category Mass : Free & paid Service & Minor repairs

* B-Category Mass : Free & paid Service & Major repairs

D-Category Mass : Free Service & Minor repairs

MARUTI AUTHORISED SERVICE STATIONS (MASS) (AS ON 01.04.2017)

477.* SPEED MOTORS (1750), 17/1 SUBRAMANYAPURA MAIN ROAD,KADIRENAHALLI,PADMANABHA NAGAR,BANGALORE PIN-560070
PH :080-6699716/6698408.

478.* KESHKAMAL MOTORS (2075), NO.943 21ST MAIN,BANASHANKARI 2ND STAGE,(NEAR KIMS MEDICAL COLLEGE),BANGALORE PIN-560070
PH :080-6710423/9448071067.

479.** GREEN CARS PVT. LTD. (2154), NO.12/6 80 FEET ROAD,6TH BLOCK KORAMANGALA,BANGALORE PIN-560095
PH :080-5535178,5539635.

480.## SOLOTECH MOTORS (2760), SY NO.82/2, D'SOUZA NAGAR,HOSAKEREHALLI-BANGALURU,DISTRICT-BANGALURU,KARNATAKA PIN-566085
PH :080-9845072603,6692613.

481.* ASHWA CARS PVT. LTD. (2827), NO.196 5TH MAIN ROAD,CHAMARAJAPET,BANGALORE PIN-560018
PH :080-6679019/9341228231.

482.## RAJ MOTORS (2829), NO.10 MAGADI MAIN ROAD,OPP. UNANI MEDICINE INSTITUTE,KOTIGEPALYA,BANGALORE PIN-560091
PH :080-9845293413/3286153.

483.** NEXUS (2768), PLOT NO. 275/301,80 FEET ROAD,R.M.V. 2ND STAGE 2ND BLOCK,BANGALORE PIN-560094
PH :080-9844013436/3412200/34123300.

484.** U.M. CARS PVT. LTD. (2847), KARNATAKA GOLF ASSOCIATION ROAD,KODIHALLI,OFF. AIR PORT ROAD,BANGALORE PIN-560008
PH :080-5211212/5217979.

485.## BENAKA MOTORS (3237), NO.158/2 VIBHUTIPURA,VIGNAN NAGAR BEHIND B.E.M.L.,NEAR RENUKA SWIMMING POOL,BANGALORE PIN-560017
PH :080-98452 12416/5236201.

486.** VISWAS CAR SERVICES PVT. LTD. (3238), NO.121/1 C. SHANKER REDDY LAYOUT,(ADJACENT TO VINAYAK TEMPLE),KALYAN NAGAR RING ROAD,CHELEKERE BANSWADI POST BANGALORE PIN-560043
PH :080-25445649.

487.** LE MANS MOTORS (3460), NEAR AYYAPPA TEMPLE,S.M. ROAD,T. DASARAHALLY,BANGALORE PIN-560057
PH :080-8371183/8376058.

488.** SMART CARS (3571), 3RD CROSS NEAR J.B. TILES,KAGGADASA PURA MAIN ROAD,C.V. RAMAN NAGAR,BANGALORE PIN-560093
PH :080-5246481/9336624362.

489.## ADARSHA AUTOMOBILES (4553), # 974 VARATHUR MAIN ROAD,NEAR PURVANKARA APARTMENTS,AFTER MARATHAHALLI,RAILWAY BRIDGE, BANGALORE PIN-560037
PH :080-28524550, 9880195465.

490.## VAHAN UDYOG (4626), # 45/28 GUBBANNA INDUSTRIAL ESTATE,DR. RAJ KUMAR ROAD,6TH BLOCK, RAJAJI NAGAR,BANGALORE PIN-560010
PH :080-23351143.

491.## PUSHPAK MOTORS (4642), 105/1 2ND MAIN NANJAPPA LAYOUT,VIDYARANYAPURA MAIN ROAD,(OPP KRUTHIKA HOSPITAL),BANGLAORE PIN-560097
PH :080-560097.

492.** TRINITY MOTORS (4638), NO. 36,4TH STAGE, W.C. ROAD,BASAVESHWARANAGAR,BANGALORE PIN-560079
PH :080-9845539474.

493.## CHANDANA MOTORS (4872), NO. 9 UNIVERSITY ROAD,GNANABHARTHI (POST),MARIYAAPPANA PALYA,BANGALORE (KARNATAKA) PIN-560056
PH :080-9880659864.

494.## SOLOTECH SERVICE CENTRE (5245), 50 FEET MAIN ROAD AVALAHALLI,MUNESHWARA BLOCK,DISTRICT - BANGALORE,KARNATAKA PIN-560085
PH :080-32419203/9448046289.

495.## TEAM TECH AUTOMOBILES (5662), PLOT NO.27/2, DODDAKANAHALLI,SARJAPUR MAIN ROAD-BANGALORE,DISTRICT - BANGALORE,KARNATAKA PIN-560034
PH :080-9986176513.

496.** TRINITY CAR CARE PVT. LTD (5851), SURVEY NO 52/1, SRI GANDHADAKAVAL VILLAGE,NAGARBHAVI, BANGALORE,DISTRICT-BANGALORE,KARNATAKA PIN-560091
PH :080-23306401.

BELGAUM

497.* BHARAT AUTO SCAN (350), 892/1 PB ROAD,BELGAUM,BELGAUM PIN-590016
PH :-433895.

BIJAPUR

498.## BAGALI MOTORS (5159), SHIKARKHANA ROAD,DISTRICT - BIJAPUR,KARNATAKA PIN-586104
PH :08352-9448100444/24323.

CHIKBALLAPUR

499.## SUKOVE ENTERPRISES (3426), B.B. ROAD N.H.7,CHIKBALLAPUR,(KARNATAKA),(KARNATAKA)PIN-562101
PH :08155-85218/9448435735.

CHIKMAGALUR

500.## FORMULA MOTORS (338), K.M. ROAD,CHIKMAGALUR PIN-577101
PH :08262-30370,20369.

501.## AAMANTHRANA MOTORS (4346), K.M. ROAD,CHIKMAGALUR PIN-505215
PH :08262-230704.

CHIKODI

502.# OM MOTORS (4445), 1751, ANKALI ROAD,NEAR B K COLLEGE,CHIKODI,KARNATAKA PIN-591201
PH :-9448484503.

CHINTAMANI

503.# TIPPU AUTO GARAGE (5770), MG ROAD,NEAR BAGEPALLI CROSS,CHINTAMANI,DISTRICT-KALOR,KARNATAKA PIN-563125
PH :-9731178590.

CHITRADURGA

504.## PRINCIPAL (255), J.M.I.T,N.H.4,P.B. NO.73,CHITRADURGA PIN-577502
PH :-9844088858.

505.## SAI AUTOMOBILES (2473), OPP. R.T.O. NH-4,IIND CROSS,JCR EXTN.,CHITRADURGA PIN-577501
PH :08194-9448154945.

COORG

506.* AUTO SERVICE & AGENCIES (2520), GEN.THIMMAIAH ROAD,MADIKERI,KODAGU. (KARNATAKA) PIN-571201
PH :-6358/6516(R).

DAVANGERE

507.## SREE MALLIKARJUNA MOTOR (229), 269 JAYADEVA CIRCLE ROAD,DAVANGERE (KARNATAKA) PIN-577002
PH :-3779/5115(R).

508.## HEGDE AUTO CENTRE (172), P.B. ROAD,DAVANGERE PIN-577006
PH :-28864/52208.

DEVANAHALLI

509.# SAHARA AUTOMOBILES (4731), OPP. A . RTO OFFICE,NH-7, B.B. ROAD,DEVANAHALLI,KARNATAKA PIN-562110
PH :-9448662364.

DHARWAD

510.** MYSORE GARAGE (2468), BELGAUM ROAD,DHARWAD,(KARNATAKA) PIN-580001
PH :080-447377/9844133273.

DODDABALLAPUR

511.# PRESTIGE MOTORS (4875), SITE NO. 51/48/2717,OPPOSITE BPCL PETROL PUMP,5TH WARD, SHENIGARPET,DODDABALLAPUR (KARNATAKA) PIN-561203
PH :-9900274594.

GADAG

512.## MODERN MOTORS (2337), HUBLI ROAD,GADAG,(KARNATAKA) PIN-582103
PH :08372-273344/9448874203.

GULBARGA

513.## DELUX AUTO SERVICE (5840), SURVEY NO 77/8,VILLAGE KUSNOOR,NEAR -,UNIVERSITY, SEDAM ROAD, GULBARGA,DISTRICT-GULBARGA,(KARNATAKA) PIN-585104
PH :-9242991292.

HOSPET

514.## SUPREME AUTO SERVICE (2569), NEAR RTO OFFICE,HARIHAR ROAD,HOSPET,(KARNATAKA) PIN-583203
PH :08394-30513.

HUBLI

515.## SHRI BASAVA MOTORS (4968), OPP DR. TEGGINMANI CLINIC,2ND CROSS HOSUR,HUBLI,KARNATAKA PIN-580021
PH :0836-9980025644/ 4260694.

KADUR

516.# SRI SAI MARUTHI SERVICE STATION (5725), OPP,KSRTC BUS STAND,UB ROAD,KADUR,DISTRICT-CHIKMAGALUR,KARNATAKA PIN-577548
PH :-9632221320.

KARKALA

517.## KARKALA MOTORS (3549), TELLAR ROAD,KARKALA,(KARNATAKA) PIN-574104
PH :08258-20364.

KOLAR

** A-Category Mass : Free & paid Service, Major repairs & Accidental repairs

C-Category Mass : Free & paid Service & Minor repairs

* B-Category Mass : Free & paid Service & Major repairs

D-Category Mass : Free Service & Minor repairs

518.## SHIVA SERVICE POINT (2472), M.B. ROAD,KOLAR,(KARNATAKA) PIN-563101 PH :08152-23890.

KOLLEGAL

519.# FIXPLUS WHEEL ALIGNMENT & AUTO CARE CENTRE (4249), C-8, IND. ESTATE,MAHADESHWARA COLLEGE ROAD,KOLLEGAL PIN-571440 PH :-09886252833/ 9448595590.

KOPPA

520.## AUTO TECH (3448), MAIN ROAD,UPPERPET,KOPPA,(CHIKMAGALUR DIST.) PIN-577126 PH :08265-21838.

KRISHNA RAJA NAGAR

521.# MOHIT MOTORS (5752), 21/2,CHIRNAHALLI ROAD,VINAYAKA EXTENSION,KRISHNA RAJA NAGAR,DISTRICT-MYSORE,KARNATAKA PIN-571602 PH :-9880320051.

KUMTA

522.# SOLOTECH (4547), NEAR HAVYAK SABHA MANTAP,MUROOR ROAD,KUMTA,KARNATAKA PIN-581343 PH :-9448149607.

KUNDAPUR

523.* PRAKASH AUTO SERVICE (4522), NEAR: K.E.B.,VODERHOBLI,KUNDAPURA PIN-576201 PH :08254-231327.

MANIPAL

524.# MANIPAL MARUTI AUTO WORKS (4578), MANIPAL ALEVOOR ROAD,NEAR R.C. CHURCH,OPP. SIGMA BAZAR,MANIPAL (UDUPI DIST) PIN-576104 PH :-9448108318.

MUDHOL

525.## OM MOTORS (5857), OPP TALUKA OFFICE,LOKAPUR ROAD, MUDHOL,DISTRICT-BAGALKOT,KARNATAKA PIN-587313 PH :-9448776744.

MUDIGERE

526.## BADRIYA CAR SERVICE POINT (5364), K.M. ROAD,MUDIGERE,DISTRICT-CHIKAMANGALORE,(KARNATAKA) PIN-577132 PH :08263-9448007094.

MYSORE

527.** CAR CLINIC (346), NO.8 GOKULAM 4TH STAGE,INDUSTRIAL LAYOUT NEAR GOKUL THEATRE,KRS ROAD,MYSORE PIN-570020 PH :0821-516055/517644.

NELAMANGALA

528.## GOUTHAM MOTORS (4332), PATEL CHANNAPPA EXTN,NELAMANGALA,KARNATAKA PIN-562123 PH :080-7722077, 9880251546, 9448668946.

RABAKAVI BANAHATTI

529.## SANGAMA MOTORS (5726), BESIDE CMC,RAMPUR MAIN ROAD,RABAKAVI,DISTRICT-BAGALKOT,KARNATAKA PIN-587314 PH :-9480534916.

RAICHUR

530.## HEERA MOTORS (3730), OPP. MOTI MASJID,SHIVJI OIL MILL COMPOUND,TIPU SULTAN ROAD,RAICHUR (KARNATAKA) PIN-584101 PH :-0853230651(R), 9845156322,50598.

RAMNAGARAM

531.# MENEZES MOTORS (4969), NO:315/298A.NEAR KANAKAPURACIRCLE.,B.M. ROAD ARCHAKARAHALL BANGALORE,DISTRICT-BANGALORE RURAL,KARNATAKA PIN-571511 PH :-9986301054.

RANEBENNUR

532.# KIZEN MOTORS (4568), P.B. ROAD,OPP. A.P.M.C MARKET,RANEBENNUR PIN-581115 PH :08373-266364, 9844401484.

SAGAR (KARNATAKA)

533.## MALLIKA AUTO CENTRE (2133), MALLIK COMPLEX,B.H. ROAD,SAGAR PIN-577401 PH :08183-29405.

534.## ADITYA AUTOMOBILES (2077), JOG ROAD,SAGAR,(KARNATAKA) PIN-577401 PH :08183-28236,28636.

SHIMOGA

535.* SHIMOGA AUTO ENGG WORKS (246), GARDEN AREA,SHIMOGA,KARNATAKA PIN-577201 PH :-9819321132.

536.## NEPTUNE AUTO WORKS (5271), PLOT -5 AUTO COMPLEX,SAGAR ROAD - SHIMOGA,DISTRICT - SHIMOGA,KARNATAKA PIN-577204 PH :-9448319758.

SIDDAPUR

537.## MARUTI AUTO WORKS (5335), SORAB ROAD.,SIDDAPUR (U.K),DISTRICT - UTTAR KANAND,KARNATAKA PIN-581355 PH :-9448525801.

SIRSI

538.* ARUNDHATI MOTORS (1258), HUBLI ROAD,SIRSI,(UTTAR KARNATAKA) PIN-581402 PH :-9845098822.

SRINGERI

539.# SHUBHASHREE MOTORS (5434), AGUMBLE ROAD ,SRINGERI,DISTRICT - CHIKAMAGALUR,SRINGERI,KARNATAKA PIN-577139 PH :08265-9448170400.

TIRTHALLI

540.## SUMUKA AUTOMOBILES (5133), AP ROAD.CEEBENE KERI,DISTRICT-SIMGA,SHIMGA,KARNATAKA PIN-577414 PH :08181-9448159463.

TUMKUR

541.## APOORVA CAR CARE CENTRE (5327), B.N.P. COMPOUND .BEHIND KRISHNA THEATRE,M.G. ROAD - TUMKUR,DISTRICT - TUMKUR,KARNATAKA PIN-560001 PH :-9448166275.

UDUPI

542.* ST. JUDE AUTOMOBILE ENGG. WORKS (4521), B.D.MARG,AMBALAPADI,UDIPI PIN-576103 PH :0820-23319.

UPPINANGADY

543.## RATNA ENTERPRISES (5447), N.H. 48. OLD GATE.,UPPINANGADY,DISTRICT - DASSHI KANNADA,KARNATAKA PIN-574241 PH :-9972995341.

KERALA

ADIMALY

544.## PLATHOTTAM AUTOMOBILES (3864), NH-49,OPPOSITE TO MINI INDUSTRIAL ESTATE,ADIMALI PIN-685561 PH :04864-9447023073.

ADOOR

545.## AUTO CLUB (2132), NEAR H.P. PUMP,VADAKKADATHUKAVU P.O,ADOOR,PATHNAMTHITTA DISTT PIN-691523 PH :0473-9447440184.

ALAPPUZA

546.## ESSAR MOTORS (4959), KALARKODE,NEAR CHINMAYA SCHOOL, NH-47,ALAPPUZHA,KERALA PIN-688003 PH :0477-9249938474.

ALUVA

547.## AUTO TEAM (2630), A/189 A,PARUR JUNCTION,ALUVA,(KERALA) PIN-683101 PH :0484-9349252698.

AMBALLUR

548.## LAKSHMI DEVI AUTO GARAGE (4137), AMBALLUR,P.O. PUDUKAD,TRICHUR,KERALA PIN-680301 PH :0480-9847004949.

ANCHAL

549.## NAMI-TAJ (2534), NAMITAJ MARUTI SERVICE CENTRE,(OPP.) PETROL PUMP,R.O. JUNCTION,ANCHAL (KERALA) PIN-691306 PH :0475-9447453745.

ANJUMOORTHY

550.## SAFA AUTO CARE (3847), N H ROAD,MANGALAM PALAM,ANJUMOORTHY POST, VADAKKENCHERY,PALAKKAD DISTT, KERALA PIN-678683 PH :0492-9447303347.

ATTINGAL

551.## OM SHAKTI AUTOMOBILES (4466), KIZHUVILAM P.O.,MAMOM,ATTINGAL,KERALA PIN-695104 PH :0470-9744658681.

AYOOR

552.* MAKKATTU AUTO CLINIC (5051), AYOOR-ANCHAL ROAD.PANACHAILA,AYOOR,DISTRICT - KOLLAM,KERALA PIN-691306 PH :0475-9847288624.

CALICUT

553.## MARUTI VEHICLES CENTRE (4727), SUBHADRA BUILDINGS,POTTAMMAL P.O.,NELLIKODE,CALICUT PIN-673016 PH :0495-9447275499.

554.## MARUTI SCAN (1675), BYE PASS JUNCTION,MEENCHANDA,CALICUT PIN-673018 PH :0495-9447345008.

** A-Category Mass : Free & paid Service, Major repairs & Accidental repairs

C-Category Mass : Free & paid Service & Minor repairs

* B-Category Mass : Free & paid Service & Major repairs

D-Category Mass : Free Service & Minor repairs

MARUTI AUTHORISED SERVICE STATIONS (MASS) (AS ON 01.04.2017)

555.## MALABAR MOTORS (4655), EAST NADAKKAVU,P.O. ERANIPALAM,CALICUT,KERALA PIN-673006 PH :0495-9846089190.

CHALLAKUDDY

556.* VIJAY AUTO SERVICE (1626), POTTA,CHALAKUDY PIN-680307 PH :0480-9995074628.

557.## STAR MARUTI GARAGE (5367), NH47 BYE PASS,NEAR CRESCENT PUBLIC SCHOOL,CHALAKKUDY,DISTRICT - THRISSUR PIN-680307 PH :0480-9946009375.

CHANGANACHERRY

558.## SAAFAA AUTOMOBILES (1148), OPP. APSARA THEATRE,CHANGANACHERRY PIN-686101 PH :0481-9447042517.

559.* PALATHRA MOTORS & SERVICE CENTRE (1072), VADAKKEKARA,VEROOR P.O.,CHANGANACHERRY PIN-686104 PH :0481-9447195154.

CHAVARA

560.## CHITHIRA AUTOMOBILES (4755), KANKATHU MUKKU,CHAVARA,KOLLAM PIN-691583 PH :0474-9447711009.

CHENGANNUR

561.* NEW TECH AUTOMOBILES (1978), INDUSTRIAL ESTATE,MUNDANCAVU,CHENGANNUR,KERALA PIN-689121 PH :0479-9388915757.

CHERTHALA

562.* POZHICKAL CAR WORLD (3037), NEAR BOYS HIGH SCHOOL,CHERTHALA,ALAPPUZHA DIST.,KERALA PIN-688524 PH :0478-9947474752.

ERATTUPETA

563.## AUTO COMFORT (3948), PKMS BUILDING,ERATTUPETTA PIN-686121 PH :04822-9447186876.

ETTUMANOOR

564.## ROHIT MOTORS (4636), THELLAKOM P.O.,M.C. ROAD,ETTUMANOOR,KERALA PIN-686016 PH :0481-9447079010.

KALANJOOR

565.## AGT MOTORS (5937), KIP JUNCTION,KALANJOOR,DISTRICT-PATHANAMTHITTA,KERALA PIN-689694 PH :04734-9447261424.

KALLAMBALAM

566.# PRAKASH AUTO ENGINEERS (5548), VADASSERIKONAM P.O. KALLAMBALAM,VARKALA,KALLAMBALAM,DISTRICT-TRIVANDRUM,KERALA PIN-695143 PH :0470-9847159618.

KALLUMUTTY

567.## MARUTI CARE (4179), KALLUMUTTY,IRITTY P.O.,KANNUR,KERALA PIN-670703 PH :0490-9946703070.

KALPETTA

568.## VARCO MOTORS (4724), CALICUT MYSORE ROAD,KALPETTA,NORTH KERALA PIN-673592 PH :04936-9961569898.

KANJIRAPALLI

569.## MACK ENTERPRISES (2729), T.B.ROAD,KANJRAPALLY PIN-686507 PH :04828-9447093739.

KANNUR

570.** PIONEER AUTO & ENGG.WORKS (4722), KANNOTHUMCHAL ROAD,KANNUR,(KERALA)PIN-670006 PH :0497-9447798255.

571.## AREN MOTORS (5139), CHAKKARAKAL.P.O. MUZHAPPALA,DISTRICT - KANNUR,KERALA PIN-670611 PH :0479-9446771237.

KARIMANOOR

572.## MACS AUTOMOBILES (5745), SILVER SQUARE ,KARIMANNOOR,THODUPUZHA,DISTRICT-IDUKKI,KERALA PIN-681585 PH :0486-9633275410.

KARUVANCHAL

573.## SAFEGUARD MARUTI SERVICE STATION (4351), MARIPURATHU HOUSE,KOKKAMULLU, KAYAMKUMPARA P.O.,CHEMPERY - VIA,CANNANORE PIN-670571 PH :0460-9447235468.

KASARGOD

574.## CARS CARE (4579), ANANDPUR,VIDYANAGAR P.O.,KASARAGOD,KERALA PIN-671123 PH :04994-9847251115.

KATTAKADA

575.## CITY ENGINEERS (4947), MARUTI SERVICE CENTRE,NEYYATTINKARA ROAD,KATTAKADA,DISTRICT-TRIVANDRUM (KERALA) PIN-695572 PH :0471-9447206257.

576.## MADATHIL MOTORS (5456), MADATHIL HOUSE,CHOONDUPALAKA,KATTAKADA P.O. - TRIVANDRUM,DISTRICT - TRIVANDRUM,(KERALA) PIN-695572 PH :0471-9495192389.

KATTAPPANA

577.## UNITED SERVICE CENTER (4433), EDASSERT JUNCTION,KATTAPPANA,KERALA PIN-685508 PH :04868-9961432941.

KAYAMKULAM

578.## PERFECT MOTORS (4948), MARUTI SERVICE CENTRE, NH-47,CHEPPAD,KAYANKULAM,DISTRICT-ALAPPUZHA (KERALA) PIN-690507 PH :0479-9447048338.

KOLLAM

579.## QUILON MARUTI SERVICE (2737), CHANDANATHOPE P.O.,KOLLAM,(KERALA) PIN-691014 PH :0474-9387307562.

KONNI

580.## GLOBAL MOTORS (2836), VAKAYAR P.O.,KONNI,(KERALA) PIN-689698 PH :0463-9446222944.

581.## MUTTATH AUTOMOBILES (5525), AROORPALAM,KONNI,DISTRICT - PATHANANTHITTA,KERALA PIN-689691 PH :0468-9447431751/9447161605.

KOOTHATUKULAM

582.## EXTRA CARE SERVICES (3232), DEVA MATHA JUNCTION,M.C. ROAD,KOOTHATTUKULAM,ERNAKULAM DIST. (KERALA) PIN-686662 PH :0485-9846723351.

KOTHAMANGALAM

583.## MAJESTIC MOTORS (1253), NEAR THANKALAM BYE-PASS ROAD,KOTHAMANGALAM,KERALA PIN-686691 PH :0485-9388883221.

584.## EXCEL MARUTI SERVICE (4342), BYE-PASS ROAD,KOTHAMANGALAM,ERNAKULAM PIN-686691 PH :0485-9847177202.

KUNDARA

585.# SPARK SERVICE (5772), ELAMPALLOOR,P.O. KUNDARA,DISTRICT-KOLLAM,(KERALA) PIN-691501 PH :-9387227500.

KUTHUPARAMBA

586.## KRISHNA MOTORS (3435), KUTTIKKUNNU,NEAR 66 KV SUB STATION,KUTHUPARAMBA,KANNUR DIST. (KERALA) PIN-670643 PH :0490-9497296380.

MANANTHAVADY

587.## AUTO CARE (2541), (SHEEJA AUTO ENGG. WORKS),THALASSERY ROAD,MANANTHAVADY,WAYANAD (DIST.) PIN-670645 PH :0493-9447040068.

MANJERI

588.## MARUTI AUTO HOUSE (4726), MARUTI SERVICE CENTRE,MELAKKAM,MANJERY PIN-676123 PH :0483-9447129289.

MANNAR

589.## MOHANS AUTOMOBILES (5457), MOHANS AUTOMOBILES & ENGINEERS,KUTTEMPEROOR P.O. MANNAR,DISTRICT - ALAPPUZHA,(KERALA) PIN-689622 PH :-9447877377.

MANNUTHY

590.** TOP CLEAN SERVICES (2834), 13/450 MANNUTHI BYE PASS,P.O. OLLUKKARA,THRISSUR,(KERALA) PIN-680685 PH :0487-9846037818.

MEENANGADI

591.## MOTOR TECH (2440), EAST MEENANGADI,KRISHNAGIRI P.O.,WAYANAD,(KERALA) PIN-673591 PH :0493-9447263360.

MOOCHIKKAL

** A-Category Mass : Free & paid Service, Major repairs & Accidental repairs

* B-Category Mass : Free & paid Service & Major repairs

C-Category Mass : Free & paid Service & Minor repairs

D-Category Mass : Free Service & Minor repairs

592.## CHELADAN'S MARUTI ENGINEERS (4659), THANUR
ROAD,MOOCHIKKAL,MEENADATHUR, TIRUR,MALAPURAM DIST (KERALA) PIN-676307
PH :0494-9895443563.

MUNNAR

593.## PLATHOTTAM AUTOMOBILES (4447), NH-49,ADIMALY,IDUKKI DIST,KERALA PIN-685612
PH :04865-9447023073.

MUVATTUPUZHA

594.** JAWAN AUTOMOBILES (2730), MADAVOOR POST,MUVATTUPUZHA PIN-686669
PH :0485-9447163809.

NEYYANTTINKARA

595.## XANON ENGINEERS (4635), RAVELI TOLL JUNCTION,NEYYATTINKARA,TRIVANDRUM PIN-695121
PH :0471-9447014813.

NILAMBUR

596.## CONFIDENCE MOTORS (5140), PALUNDA.CHUNGATHARA,NILAMBUR,DISTRICT - MALLAPURAM,KERALA PIN-679334
PH :-9447681623.

NILAMEL

597.## LIBRA (3431), M.C. ROAD,NILAMEL,KOLLAM DIST.,(KERALA) PIN-691535
PH :0474-9447335089.

OCHIRA

598.* MANGALATH AUTOMOBILES (3836), NH 47 VALIYAKULANGARA,OCHIRA P O,KOLLAM DIST,KERALA PIN-690526
PH :0476-9847258696.

OLLUR

599.## TOPCLEAN SERVICES (4468), 10/153,CHRISTOPHER NAGAR,P.O OLLUR,TRICHUR (KERALA) PIN-680306
PH :0487-9846037818.

PALAKKAD

600.## CAR CRAFT (2139), 5/682 (1),MANALI,PALAKAD,(KERALA) PIN-678001
PH :0491-9447137870.

PANDALAM

601.* AISHWARYA AUTOMOBILES (2067), NEAR K.S.R.T.C. BUS STOP,PANDALAM PIN-689501
PH :0473-9847049140.

PARIPALLY

602.## ALLIANCE MARUTI SERVICES (3243), NH-47,PARIPPALLY,KOLLAM DIST. (KERALA) PIN-691574
PH :0474-9349926440.

PATHANAPURAM

603.## MANNIL AUTOMOBILES (4150), NEAR PANCHAYAT
OFFICE,PATHANAPURAM,KERALA PIN-689695
PH :0475-9447258496.

PATHNAMTHITTA

604.** C.J. MARUTI CARE CENTRE (1255), VARIYAPURAM,ELANTHOOR EAST P.O.,PATHANAMTHITTA,(KERALA) PIN-689643
PH :0468-9446913874.

PERAVOOR

605.## CAR CARE AUTOMOBILES (4422), P.K. NIVAS,KUNITALA P.O.,PERAVOOR,KANNUR DIST. PIN-670673
PH :04902-9946444691.

PERUMBAVOOR

606.## ACC MARUTI (2835), XIV/III-B,M.C. ROAD,PERUMBAVOOR,(KERALA) PIN-683542
PH :0484-9846022593.

607.## MILLENNIUM MOTORS (4873), OLD VALLAM ROAD,KADUVAL,PERUMBAVOOR,DISTRICT-ERNAKULAM (KERALA) PIN-683542
PH :0484-9447052488.

QUILANDY

608.## HITECH MARUTI (3025), MAIN ROAD,KOYILANDY,CALICUT DISTT. PIN-673305
PH :0496-9497304619.

RANNY

609.## DEEPA AUTOMOBILES (5177), DEEPA AUTOMOBILES.PAZHAVANGADI,P.O. RANNY,DISTRICT-PATHANAMTHITTA,KERALA PIN-689673
PH :04735-9447365602.

SASTHA MANGALAM

610.## MARSHAL AUTOMOBILES (4035), SWATI NAGAR, TC 10/147,PIPPIN MOODU, SASTHA MANGALAM,PEROORKADA,TRIVANDRUM PIN-695005
PH :0471-9447461101.

SULTAN BATHERY

611.## AUTOMECK (4725), BEENCHI P.O.,SULTAN BATTERY PIN-673592
PH :0493-9249999515.

612.## NEW INDIAN MARUTI SERVICE CENTRE (4577), MYSORE ROAD,SULTAN BATHERY,WAYANAD DISTRICT,KERALA PIN-673592
PH :0493-9446810701.

613.## TEE PEE MOTORS (4773), 9/668-B OOTY ROAD,NEAR BLOCK OFFICE,SULTAN BATHERY,WAYANAD (KERALA) PIN-673592
PH :04936-9447934726.

TALIPARAMBA

614.## YESKAY (3368), KAKATHODE,TALIPAPARAMBA,KANNUR DISTT (KERALA) PIN-670141
PH :0460-9744076850.

THALASSERRY

615.## SAFE HANDS (3038), ERANHOLI,CHUNGAM,THALASSERY,(KERALA) PIN-670107
PH :0490-9744322317.

THALAYOLAPARAMBU

616.* MYALIPARAMPIL MOTORS (3233), SILON JUNCTION,NEAR THALAYOLARAMBU,POOZHIKOL P O PIN-686604
PH :04829-9447562050.

THAMARASSERY

617.## MALABAR MOTORS (4645), WARD NO. 12, BLDG NO. 121,WAYANAD ROAD, KARADY,THAMARASSERY,CALICUT PIN-673573
PH :0495-9387531000.

THIRUVALLA

618.## MARUTI AUTO SPOT (1628), MUTHOOR,M C ROAD,THIRUVALLA PIN-689107
PH :0469-9447034608.

THIRUVANANTHAPURAM

619.## SREEKARIYAM AUTOMOBILES (353), SREEKARIYAM
P.O.,THIRUVANANTHAPURAM PIN-695017
PH :0471-9447050313.

620.* PROFESSIONAL MOTORS (1256), NEAR ELECTRICITY
BOARD,PEROORKADA,TRIVANDRUM PIN-695005
PH :0471-9447697945.

621.## HITECH INDUSTRIES (1951), NEAR ULLOOR BRIDGE,PATTOM
P.O.,THIRUVANANTHAPURAM,(KERALA)PIN-695004
PH :0471-9447732057.

622.## EMINENT MARUTI SERVICE (2360), T.C. 610 M.C. ROAD,MANNANTHALA,TRIVANDRUM PIN-695015
PH :0471-9447713639.

623.## MUKUNDANS (3434), PADMAVILASAM,T.C. 2/1370,PATTOM PALACE
P.O.,THIRUVANANTHAPURAM PIN-695004
PH :0471-9887834555.

TRIVANDRUM

624.* KICHU MOTORS (5453), TC.49/962 ,SREEMOOLAM NAGAR
CHIRAMUKKU,MANACAUR (PO) TRIVANDRUM,DISTRICT - TRIVANDRUM,KERALA PIN-695009
PH :0471-9847023025.

VADAKKANCHERY

625.## TOPCLEAN SERVICES (4354), 275-A,NEAR UTHRALIKKAVU TEMPLE,KUMARANELLUR P.O.,VADAKKANCHERY, TRICHUR PIN-680307
PH :04884-9846037818.

VADANAPPALLY

626.## MONARCH MARUTI CARE CENTRE (4079), NEAR NORTH JUMA MASJID,GANESHA MANGALAM,P O VADANAPALLY,TRICHUR DIST (KERALA) PIN-680614
PH :0487-9847792698.

VADAVATHOOR

627.## CCARS (5754), VADAVATHOOR,PO-KOTTAYAM,DISTRICT-KOTTAYAM,KERALA PIN-686503
PH :0481-9447208558.

VARKALA

628.* S.S. MOTORS (2979), NEAR POLICE STATION,VARKALA,TRIVANDRUM DISTT.,TRIVANDRUM DISTT. PIN-695141
PH :0472-9446104991.

VATAKARA

629.## RANI AUTOMOBILES & ENGINEERING WORKS (1674), NADAPURAM ROAD,MADAPALLY COLLEGE (P.O.),VATAKARA PIN-673102
PH :0496-9447517004.

LAKSHADWEEP

LAKSHADWEEP

** A-Category Mass : Free & paid Service, Major repairs & Accidental repairs

C-Category Mass : Free & paid Service & Minor repairs

* B-Category Mass : Free & paid Service & Major repairs

D-Category Mass : Free Service & Minor repairs

630.## POPULAR REPAIR & SERVICE CENTRE (2944), SECRETARIAT ROAD,KAVARATTI,LAKSHADWEEP PIN-682555 PH :0489-989543876.

MADHYA PRADESH

BALAGHAT

631.## GULAB AUTOMOBILES (1553), GUJARI CHOWK,BALAGHAT,MADHYA PRADESH PIN-481001 PH :07632-9425402926.

632.## SAURAV MOTORS (4069), DEENHI ROAD,GARRA INDUSTRIAL AREA,BALAGHAT,MADHYA PRADESH PIN-481001 PH :07632-9826310979.

BARWANI

633.## SPEED AUTOMOBILES (5260), KHANDWA BARODA ROAD,NR. BALAJI TOLL KANTA,BARWANI,DISTRICT-BARWANI,MADHYA PRADESH PIN-451552 PH :451551-9926146073.

BETUL

634.## ADITYA MOTORS (1263), NAGPUR BHOPAL ROAD,SADAR,BETUL,MADHYA PRADESH PIN-461001 PH :07140-9425381581.

BHIND

635.## MAA PITAMBRA MOTORS (5241), OPP. RAJENDERA CONVENT SCHOOL,LAKSHAR ROAD - BHIND,MADHYA PRADESH PIN-477001 PH :-9826240582.

BHOPAL

636.** VIDHYA AUTOMOBILES PVT. LTD. (), PLOT NO. 235,ZONE II,M.P. NAGAR,BHOPAL (M.P.) PIN-462011 PH :0755-9826053198.

637.## SHRI KRISHNAN CAR CARE (1679), POLYTECHNIC ROAD,NEAR PETROL PUMP,BHOPAL,(M.P.) PIN-462023 PH :0755-9424454030.

638.* TAURUS AUTOMOBILES (3372), ALAKNANDA COMPLEX,OPP.VIJAY STAMBH PRESS COMPLEX,M.P. NAGAR ZONE-I,BHOPAL (M.P.) PIN-462011 PH :0755-9303131403.

639.## SHUBHAM AUTOMOBILE (5052), PLOT NO 1 & 2 CHAWANI SHAHPURA,GULMOHAR ROAD, SHAHPURA,DISTRICT BHOPAL PIN-462011 PH :0755-9425009869.

640.** RANJIT AUTOMOBILES (5452), 117.ZONE II . M.P. NAGAR.BHOPAL,DISTRICT - BHOPAL,MADHYA PRADESH PIN-462011 PH :0755-9826250439.

BIAORA

641.## GURUKRUPA MOTORS (5670), OPP PRABHAT BREAD INDUSTRY,AB ROAD - BIOARA,DISTRICT - BIOARA,MADHYA PRADESH PIN-452001 PH :07374-9425037506.

642.# NEW INDIA AUTO GARAGE (5337), NEAR VARMA SALES,AB ROAD -BIORA,DISTRICT - RAJGARH,MADHYA PRADESH PIN-465674 PH :-9826555002.

BURHANPUR

643.** SWADESHI MOTORS (4229), NEAR GANPATI MANDIR,GANPATI NAKA,BURHANPUR PIN-450331 PH :07325-9425086920, 07325245150.

CHINDWARA

644.## BINDRA AUTOMOTIVE (5420), SHANICHRA BAZAR,CHHINDWARA,M.P. PIN-480001 PH :-9827292392.

DABRA

645.## MODI MOTORS (3857), BHALLA KA DERA,JHANSI ROAD,DABRA,GWALIOR PIN-474001 PH :07524-9425119888.

DAMOH

646.## MARUTI PRIME (1156), BUS STAND,STATION ROAD,DAMOH PIN-470661 PH :-9425096209.

DATIA

647.## HIND MOTORS (4470), JHANSI ROAD,KALAMPURAM TIRHA,DATIA,MADHYA PRADESH PIN-475661 PH :07522-9406969206.

DEWAS

648.## AZAD MOTORS (4534), 26 NEW MARKET,MOTI BANGLA,DEWAS,MADHYA PRADESH PIN-455001 PH :07272-9827533591.

DHAMNOD

649.## REWANCHAL MOTORS (6027), NEW PRAKASH NAGAR,AB ROAD, DHAMNOD,DISTRICT-DHAR,MADHYA PRADESH PIN-454552 PH :-9425334147.

DHAR

650.## JIYO MOTORS (5031), OPP DAK BANGLA, INDORE ROAD DHAR,DISTRICT - DHAR,DHAR,MADHYA PRADESH PIN-454001 PH :07292-9893633559.

GWALIOR

651.** MARUTI ENTERPRISES (3021), KHERAPATI ROAD,GWALIOR,(M.P) PIN-474002 PH :0751-9425116466.

652.## CLASSIC MOTOR & SERVICE STATION (5242), CHAUHAN PIAO, M.G. ROAD,THATIPUR MORAR,GWALIOR,MADHYA PRADESH PIN-474011 PH :-9329603001.

HARDA

653.## MANOJ UDYOG & SERVICE CENTER (4145), 87-88, INDUSTRIAL AREA,CHHIPANER ROAD,HARDA,M.P PIN-461331 PH :-9826227245.

INDORE

654.** KHALSA AUTO SERVICE (5325), 36 KIBE COMPOUND,INDORE PIN-452001 PH :-9425055788.

655.** BOMBAY MOTORS (1655), 10 Y.N. ROAD,INDORE,(M.P.) PIN-452003 PH :0731-9893887867.

656.## BADSHAH MOTORS (5027), 150/2, NOORANI NAGAR, NEAR JAIMAL SINGH PETROL PUMP,DHAR ROAD, INDORE,DISTRICT-INDORE,MADHYA PRADESH PIN-452008 PH :-9826098427.

657.## JYOTI RAGHUNATH MOTORS (5149), 3/3 RAMBAGH,BEHIND PETROL PUMP,INDORE,MADHYA PRADESH PIN-452001 PH :0731-9425965001.

ITARSI

658.** UNITY ENTERPRISES (3270), PLOT NO.97,INDUSTRIAL AREA,KHEDA,ITARSI (M.P.) PIN-461111 PH :07572-9893528689.

659.## PITAMBARA MOTORS (5041), NH-69, BETUL ROAD, NEAR PLYBOARD,FACTORY ITARSI,DISTRICT - ITARSI,MADHYA PRADESH PIN-461111 PH :-9826528912.

JABALPUR

660.## YASH VEHICLES CARE (2169), 1663 WRIGHT TOWN,OPP. TELEGRAPH GATE NO.2,JABALPUR,(M.P.) PIN-482002 PH :0761-9826259859.

661.## SUPER MARUTI SERVICE (4952), 375-A PREM NAGAR,OPP. GURUDWARA,JABALPUR,MADHYA PRADESHPIN-482001 PH :0761-9827094994.

JAORA

662.* RATNARAJ MOTORS (4245), MHOW NEEMUCH ROAD,BHIMAKHERI FATAK,JAORA (M.P) PIN-457226 PH :-9827238700.

JAWAD

663.## SHARMA MOTORS (5764), IN FRONT OF PAWAN MILL,STATION ROAD, JAWAD,DISTRICT-NEEMUCH,MADHYA PRADESH PIN-458330 PH :-9425441270.

KATNI

664.## KATNI MOTORS (4949), C/O MAHURANIPUR UNION,TRANSPORT CORPORATION,NH-7, PANNA MORH,KATNI (MADHYA PRADESH) PIN-483501 PH :07622-9425162660.

KHANDWA

665.## M.K. AUTOMOBILES (5326), SANTOSH NAGAR,OPP. JHEELODHYAN,INDORE ROAD,KHANDWA PIN-450001 PH :0733-9425085666.

KUKSHI

666.## DILIP MARUTI SERVICE CENTER (4649), OPP. GAYATRI SAROVAR,KUKSHI,DISTT DHAR PIN-454331 PH :07297-9893227070.

MANDSAUR

667.* JANGID MOTORS (2735), NAYAPURA ROAD,NEAR R.K. HOSPITAL,MANDSAUR,(M.P.) PIN-458001 PH :07422-9827266583, 07422241146.

668.## DEV MOTORS (4562), SITAMAU FATAK,MANDSAUR,MADHYA PRADESH PIN-458001 PH :-9826751534.

MHOW

669.* HIGHWAY MOTORS (4144), A.B. ROAD,DONGRAGAON,MHOW,INDORE M.P PIN-453441 PH :07324-7324277181, 9826035653.

MORENA

** A-Category Mass : Free & paid Service, Major repairs & Accidental repairs

C-Category Mass : Free & paid Service & Minor repairs

* B-Category Mass : Free & paid Service & Major repairs

D-Category Mass : Free Service & Minor repairs

670.## SHYAM MARUTI SERVICE STATION (2964), SHYAM BIHAR COLONY,A.B. ROAD,MORENA,(M.P.) PIN-476001 PH :07532-9425366274.

NAGDA

671.## MARUTI NANDAN (3939), 15 VERDHAMAN NAGAR,MEHATWASA,BIRLAGRAM,NAGDA, DISTT UJJAIN PIN-456331 PH :0736-9406918392.

SAGAR

672.## SAGAR MOTORS (4955), NEAR GURUDWARA,JHANSI BHOPAL ROAD, BHAGWANGANJ,SAGAR,MADHYA PRADESH PIN-470002 PH :07582-9826070549.

SARNI

673.## JHANVI SERVICE STATION (3738), MAIN ROAD,BAGDONA,SARNI,DISTT. BETUL (M.P.) PIN-460449 PH :07146-9425382313.

SATNA

674.* KAPOOR SERVICING CENTRE (1162), 90 PREM NAGAR,SATNA,(M.P.) PIN-485001 PH :-9827095182.

SEONI

675.## HIGHWAY MOTORS (2262), NEAR MOTEL CENTER POINT,SEONI-JABALPUR HIGHWAY,SEONI,(M.P.) PIN-480661 PH :-9424364655.

SHAHDOL

676.## PACE CRAFTERS AND AUTO SERVICES (2145), NEAR VIRAT TEMPLE,BANGANGA,SHAHDOL,(M.P.) PIN-484001 PH :07652-9424701495.

SHAJAPUR

677.## SHRIYA MOTORS (2568), 174 A.B. ROAD,SHAHJAPUR,(M.P.) PIN-456001 PH :07364-9826783993.

SHEOPUR

678.## GOYAL AUTO (5446), NEAR BABBAN MARKET.BARODA ROAD,SHEOPUR,DISTRICT - SHEOPUR,MADHYA PRADESH PIN-476332 PH :-9826240944.

SHIVPURI

679.* KARUN MOTORS (4273), NEAR ARUN DHARAMKANTA,GUNA NAKA,A.B. ROAD,SHIVPURI PIN-473551 PH :07492-9425137808.

SIDHI

680.## MAMTA MOTORS (2447), BHUSA MORE,POST - SINGRAULI,DISTT. SIDHI (M.P.) PIN-486889 PH :07805-9919804489.

681.## KHARE MOTORS (4068), NH-75,SINGRAULI ROAD,SIDHI,MADHYA PRADESH PIN-486889 PH :07805-8120090404.

TIKAMGARH

682.* ASHENDRA AUTOMOBILES (2636), 350 OPP. JAWAHAR NAVODAYA VIDYALAYA,KUNDESHWAR,TIKAMGARH,(M. P.) PIN-472001 PH :07683-245387 ,9425141840,9425141940,9425145687.

UJJAIN

683.## SUGANDHI BROTHERS (324), DEWAS ROAD,UJJAIN (M.P) PIN-456010 PH :07341-9425379301.

684.## ZALANI AUTO SERVICE (1554), 4/2 NAZARALI MARG,FAZALPURA,UJJAIN PIN-456006 PH :0734-9893446739.

VIDISHA

685.## SAMAY MOTORS (5179), NEAR SC/S SHED,PITALMIR CHOURAHA,SAGAR ROAD NH-86,VIDISHA PIN-464002 PH :07592-9425392521.

WAIDHAN

686.## ANANT MOTORS (5732), BILAUNJI ,WAIDHAN,DISTRICT-SINGRAULI,MADHYA PRADESH PIN-486886 PH :-9753167070.

MAHARASHTRA

AKLUJ

687.## SONAJ AUTOMOTIVES PVT. LTD. (2665), SHANKARRAO MOHITE PATIL,CO-OP INDUSTRIAL ESTATE,PLOT NO.36 P.O. BOX NO.-11,AKLUJ (MAHARASHTRA) PIN-413101 PH :02185-224376 /9422644194.

AKOLA

688.## AUTOLAND (5936), RAM NAGAR,TOSHNIWAL LAYOUT,AKOLA,DISTRICT-AKOLA,MAHARASHTRA PIN-444005 PH :0724-2453560/09422164050.

AKOLE

689.## SAMARTH CAR CARE (5555), MAHALAXMI COLONY,K.G. ROAD-AKOLE,DISTRICT - AHMEDNAGAR,MAHARASHTRA PIN-422601 PH :-9763896321.

AMALNER

690.## LUCKY AUTO CARES (5853), R.K. COMPLEX,R.K. NAGAR,DHULE ROAD,AMALNER,DISTRICT-JALGAON,MAHARASHTRA PIN-425401 PH :-9422789764/9404056044.

AMBERNATH

691.* J.S. AUTOMOBILES (4567), B-31/3,MIDC, KALYAN AMBERNATH ROAD,AMBERNATH,MAHARASHTRA PIN-421501 PH :0251-2602061/62/9370116436.

AURANGABAD

692.* MARUTI AUTOMOBILES (3441), MAHAVIR COMPLEX,AKASHWANI CHOWK,JALNA ROAD,AURANGABAD (MAHARASHTRA) PIN-431008 PH :0240-9822015949/2330992.

693.* CAR CARE (5173), #85.SERVICE INDUSTRIAL SECTOR,TOWN CENTRE. CIDCO,DISTRICT-AURANGABAD,MAHARASHTRA PIN-431003 PH :0240-240-2488929/2488939.

BADLAPUR

694.## OMKAR AUTO SERVICES (3376), OMKAR BUNGLOW,GOLE WADI,KULGAON STN.,BADLAPUR DIST. THANE PIN-421503 PH :0251-2690371.

BARAMATI

695.## AUTO WINGS (2142), PLOT NO. C-22/23,BARAMATI CO-OP INDUSTRIAL ESTATE,JALOCHI DISTRICT PUNE,MAHARASHTRA PIN-413102 PH :02112-243252/ 243077/24379.

BARSI

696.## OM SERVICE CENTRE (5359), KURWEDI ROAD,BARSI,DISTRICT - SOLAPUR,(MAHARASHTRA) PIN-413401 PH :-9850437003.

BEED

697.## NEW AGWAN SERVICES (2235), 850 SHYOG NAGAR,JALNA ROAD,BEED,BEED PIN-431122 PH :02442-227007.

BHIWANDI

698.## VAQUAR AUTO WORKS (544), AGRA ROAD JUNCTION,VANJARPATI NAKA,BHIWANDI,THANE DISTT.(MHRS) PIN-421302 PH :02522-243975/243966/9822655991.

BHUSAWAL

699.* SAIKRIPA AUTOMOBILES (2129), NATIONAL HIGHWAY NO.6,S.NO.54/5X6 NEAR KHADKA ROAD CROSSING,BHUSAWAL,DISTT. JALGAON (MAHARASHTRA) PIN-425201 PH :024819-9422789764.

BOISAR

700.## SIFAR CAR CARE (4055), PLOT NO. 15 AT-KURGAON,P O KUNDAN,BOISAR TARAPUR ROAD,TAL PALGHAR, DISTT THANE PIN-401501 PH :02525-282384.

BULDHANA

701.## JADHAV & SONS (2122), MR.SUSHIL JADHAV,MAIN ROAD,NEAR POLICE STATION,WARD NO.25 BULDHANA PIN-443301 PH :07262-242647/9421464285.

CHANDRAPUR

702.## SHEIKH AUTOMOBILES (5379), APPOSITE GOVT. ITI.CIVIL LINES,CHANDRAPUR,DISTRICT - CHANDRAPUR,MAHARASHTRA PIN-442401 PH :07172-253218.

CHIPLUN

703.## MANORKAR AUTOMOBILES (270), NEAR RAILWAY STATION,BOMBAY-GOA HIGHWAY,WALOPE CHIPLUN,DISTT. RATNAGIRI PIN-415605 PH :02355-256299/255299.

704.## MAYUR MOTORS (168), SITA APARTMENTS,NEAR BAHADUR SHEIKH NAKA,CHIPLUN DISTT. RATNAGIRI,MAHARASHTRA PIN-415605 PH :02355-320048/255885.

DAPOLI

705.* ROYAL AUTO SERVICE STATION (3444), DAPOLI-MANDANGAD ROAD,MAUJE-DAPOLI,TAL- DAPOLI,DIST. RATNAGIRI (MAHARASHTRA) PIN-415712 PH :02358-282274/9422661033/9226701776.

DEOPUR

706.** AGRO ENGINEERING SERVICES (2244), DIVERSION ROAD,DEOPUR,DHULE,DHULE PIN-424005 PH :02562-26171/270964/9423193884.

DOMBIVILI

** A-Category Mass : Free & paid Service, Major repairs & Accidental repairs

C-Category Mass : Free & paid Service & Minor repairs

* B-Category Mass : Free & paid Service & Major repairs

D-Category Mass : Free Service & Minor repairs

707.## MEGA SERVICES (2573), A-173,PHASE-1,NEW KALYAN BYPASS ROAD,OPPOSITE ADARSH PARK,MIDC,DOMBIVLI PIN-421203 PH :0251-2448877/2448977/9821012736/9987497197.

GADACHIROLI

708.## VENUS AUTOMOTIVE (4170), PLOT # 2, NR GOVERNMENT ITI COLLEGE,ADJ TO CHANDRAPUR GADACHIROLI HIGHWAY,GADACHIROLI,MAHARASHTRA PIN-442605 PH :07132-233222/9422151222/9689228222.

HINGANGHAT

709.## S.K MOTORS (5530), JAGANNATH WARD,NH-7,HINGANGHAT,DISTRICT - WARDHA,MAHARASHTRA PIN-442301 PH :-9421726700.

ICHALKARANJI

710.## SAI AUTO LEADS (3821), 7/597 SANGLI VES,ICHALKARANJI,DIST. KOLHAPUR PIN-416115 PH :0230-435827/439227.

INDAPUR

711.## AJINKYA MOTORS (3868), S NO. 233(448),PUNE SOLAPUR HIGHWAY,NEAR HOTEL SAI PALACE,A/P INDAPUR DISTT. PUNE PIN-413106 PH :0211-225471.

ISLAMPUR

712.## VIJAY MOTORS (5134), PETH ISLAMPUR ROAD,NEAR PETH NAKA -ISLAMPUR,DISTRICT - SANGLI,MAHARASHTRA PIN-416112 PH :-9860446084.

JALGAON

713.* SHREE MOTORS (3040), 362 SHIVAJI NAGAR,JALGAON PIN-425 001 PH :0257-2221927,9823150704/9404050704.

KALWA

714.** SHREE SIDDHI MOTORS (5668), NEXT TO LILAVATI CO-OP SOCIETY,DATTAWADA,KALWA KHAREGAON ROAD-KALWA(W),DISTRICT - THANE,(MAHARASHTRA) PIN-400605 PH :-64537777/25407778/79.

KALWAN

715.## KRISHNA AUTOMOTIVE (4037), GANESH NAGAR,AT POST & TALUKA,KALWAN,DIST NASHIK PIN-423501 PH :02592-9420233134/8087988735.

KALYAN

716.## SHIVAM AUTO CARE (571), C/O GRIHALAXMI VATSU NIRMAN,MURBAD ROAD,KALYAN,BOMBAY PIN-421304 PH :0251-2321518/6518007/9867001771.

KANKAVLI

717.** SAPALE AUTO SERVICE PRIVATE LIMITED (1975), MUMBAI GOA ROAD,N.H.17,KALMATH,KANKAVLI DISTT. SINDHUDURG PIN-416602 PH :02367-233434/231934/9422434701.

KATOL

718.## BALAJI SERVICE STATION (5962), PLOT NO. XI,MIDC,SAWARGAON ROAD,DONGARGAON-KATOL,NAGPUR, DISTRICT-NAGPUR,MAHARASHTRA PIN-441302 PH :07112-9763867144.

KHAMGAON

719.## JAIDEEP MOTORS (4779), NEAR RELIANCE PETROL PUMP,NANDURA ROAD,KHAMGAON,DISTRICT-BULDHANA (MAHARASHTRA) PIN-444303 PH :07263-9850352826/9922917419.

KHED

720.## BHARAT AGENCIES (4548), AT POST BHARNA NAKA,NH-17,KHED,RATNAGIRI DIST PIN-415621 PH :02356-263309/260309/ 9049024781/9420910709.

KOLHAPUR

721.* VAKRATUNDA MOTORS (3142), OPP MAHAVIR COLLEGE,NAGALA PARK,KOLHAPUR PIN-416003 PH :0231-2680742.

KOPARGAON

722.* SAI MOTORS (4449), NAGAR MANMAD HIGHWAY,NEAR HOTEL ASHOKA,KOPARGAON,DIST. AHMEDNAGAR (MAHARASHTRA) PIN-423601 PH :02423-9326439000/9850684384.

LONAVALA

723.## APPOLO MOTOR REPAIRING WORKS (2543), MUMBAI-PUNE ROAD,LONAVALA,MAHARASHTRA PIN-410401 PH :02114-280330/9370721905.

MAHAD

724.## SHREE AUTO (2572), NAGALWADI PHATA BOMBAY-GOA HIGHWAY,AT & TALUKA - MAHAD,DISTT. RAIGAD,MAHARASHTRA PIN-402301 PH :02145-233111/ 223256/9422495797/9422495799.

MALEGAON

725.## MALEGAON AUTO CENTRE (3721), NEAR MOTI BAUG NAKA,MALEGAON PIN-423203 PH :0255-9371376911/02554-255011.

MANGAON

726.## KRUPA SERVICES (574), KRUPA SERVICES,AT : NANORE,POST : MANGAON,DISTT-RAIGAD PIN-402104 PH :-263363.

MIRAJ

727.## ASHOK AUTOMOBILES (5672), C.S. NO:70-C,CHH - SHIVAJI ROAD,MIRAJ,DISTRICT - SANGLI,MAHARASHTRA PIN-416410 PH :0233-2375961.

MUMBAI

728.## AUTO SERVICES (526), KING'S CIRCLE,MATUNGA,MUMBAI (MHRS)PIN-400019 PH :022-24141031/24141877/65804809.

729.## HIND AUTOMOBILES (550), 29 SEWREE WADALA ROAD,KING'S CIRCLE,MUMBAI (MHRS)PIN-400019 PH :022-24096680/24096544/24037922.

730.** RAVI AUTOMOBILE SERVICES (553), GHATKOPAR-MAHUL ROAD,TILAK NAGAR,MUMBAI PIN-400089 PH :022-25227282/32929767/25221656/65752531/ 25293582.

731.** ZENITA AUTO WORKS (525), BEHIND H.P.PETROL PUMP,NAV PADA MAROL NAKA,ANDHERI (E),MUMBAI (MHRS.)PIN-400059 PH :022-28322659/28200653/28390850/28218906.

732.* ASHA AUTO SERVICE (570), I.O.C. DEALER,L.B.SHASTRI MARG,KURLA,MUMBAI PIN-400070 PH :-26505338, 26506088, 9820727091.

733.## SURAJ SANGHI SERVICE STATION (438), DR. ANNIE BESANT ROAD,WORLI,MUMBAI PIN-400018 PH :-24931704, 24924754.

734.** SHAMAL MOTORS (1154), VAITY WADI,BHANDUP-SONAPUR ROAD,BHANDUP (WEST),MUMBAI PIN-400078 PH :022-25665266/64500500/25666465.

735.** CHAMUNDA MOTORS (P) LTD. (520), RAM BAUG NEAR SUNDAR DHAM,OFF S.V.ROAD,BORIVILI (W),MUMBAI PIN-400092 PH :022-28635677/ 28090888/28616701.

736.## BANAI AUTO CARE (6053), OPP. MAROL POLICE CAMP,NEXT TO AAREY CHECK POST,MAROL MAROSHI ROAD,MUMBAI PIN-400059 PH :022-28349816/28349817.

737.## JAGMAN MOTORS PVT. LTD. (1556), NEXT TO HOTEL ROYAL SALUTE,ANDHERI KURLA ROAD,SAGBAUG,MUMBAI PIN-400059 PH :022-28502590/28504983.

738.** POWAI AUTO WORKS (1660), OPP. PANCH KUTIR BUS STOP,19 ADI SANKARACHARYA MARG,POWAI,MUMBAI PIN-400076 PH :022-25700358/25700176/25708842/25703826.

739.** ORIX AUTO INFRASTRUCTURE SERVICES LTD (1971), 94 MAROL INDUSTRIAL ESTATE,ANDHERI KURLA ROAD,ANDHERI (EAST),MUMBAI PIN-400059 PH :022-67070100/67070221/67070216/67070222.

740.## LAXMI AUTO WORKS (2542), PLOT NO.1041,SAYANI ROAD,PRABHADEVI,MUMBAI PIN-400025 PH :022-24308566/24378788/24321722/9820303646.

741.* SUPER AUTO SERVICE PVT. LTD. (2430), DESAI WADI JAYWANT SAWANT ROAD,NEAR HAPPY HOME SOCIETY,DAHISAR (W),MUMBAI PIN-400068 PH :022-28930239/28927124.

742.## CHEMBUR MOTORS (2526), 31/A ANAND NAGAR,OFF SION TROMBAY ROAD,SINDHI SOCIETY CHEMBUR,MUMBAI PIN-400071 PH :022-25243639.

743.* ALLIED AUTO AGENCIES (2666), 86/20 DR. AMBEDKAR ROAD,KHAR,MUMBAI PIN-400052 PH :022-26007066, 26498850, 26042540.

** A-Category Mass : Free & paid Service, Major repairs & Accidental repairs

C-Category Mass : Free & paid Service & Minor repairs

* B-Category Mass : Free & paid Service & Major repairs

D-Category Mass : Free Service & Minor repairs

744.## PRINCE SERVICE CENTER (3440), 34 GAMDEVI ROAD,SANGHANI ESTATE,GHATKOPAR (WEST),MUMBAI PIN-400086
PH :022-25001383/25001333.

745.** CARKRAFT AUTOMOBILE SERVICES PVT. LTD. (4654), ABC GODOWN, MINERVA INDUSTRIAL ESTATE,OFF P.K. ROAD,NEAR SAI DHAM MANDHIR, MULUND (W),MUMBAI PIN-400080
PH :-25628005/6/7, 9820296924.

746.** DEV MOTOR CARE PVT LTD (4878), 24ABCD,GOVT. INDUSTRIAL ESTATE,HINDUSTAN NAKA, CHARKOP, KANDIVLI(W),MUMBAI,(MAHARASHTRA) PIN-400067
PH :022-9867444334/28625366/28082661.

747.** AUTO CRAFT (4759), PLOT NO. 1-B,NEXT TO DAMJI SHAMJI IND ESTATE,LBS MARG, VIKHROLI (W),MUMBAI PIN-400083
PH :022-25783586/ 55974075/9323151010.

748.** POWAI AUTO WORKS (4966), GALI NO 14/15/16, BUILDING NO1,C WING, KAILASH INDUSTRIAL COMPLX,PARKSITE VIDHROLI (W) PIN-400079
PH :022-25173986/25173961/25173126/25173127.

749.* ST. FRANCIS AUTOMOBILES (5154), MOUNT POINSUR BORIVALI (WEST),MUMBAI,DISTRICT - MUMBAI,MAHARASHTRA PIN-400103
PH :022-28951206/28934325.

750.## CHHAGAN MITHA (5230), CORNER OF WARDEN ROAD & PEDDAR ROAD,POST BOX NO. 6521,MUMBAI,MAHARASHTRA PIN-400026
PH :022-66578384/5/6/7.

751.** SHAH CAR CARE (5436), SADANWADI.LAKE ROAD.OFF LBS MARG,NEAR KRISHNA TALKIES,DISTRICT - MUMBAI,(MAHARASHTRA) PIN-400078
PH :022-25961831/32/33/9819159447.

MURBAD

752.## JAYDEEP AUTOMOBILES (5676), MURBAD KALYAN HIGHWAY(NH-222),NEAR NAVDURGA HOTEL,AT-PO-TAL:MURBAD,DISTRICT-THANE,MAHARASHTRA PIN-421401
PH :02524-682260/9423370219/9226840777.

NAGAPUR

753.* AMIT SERVICE STATION (4158), NEAR NAGAPUR HIGHWAY BRIDGE,NAGAR-MANMAD HIGHWAY,NAGAPUR DIST-AHMADNAGAR,MAHARASHTRA PIN-414111
PH :0241-5601141/ 9822216286/2778336.

NAGPUR

754.** HASAN GARAGE (2021), MOHAN NAGAR,NAGPUR (MHRS) PIN-440001
PH :0712-2580972/533805.

755.## SHREEJEE SERVICES (2027), CHANDAK KOTHI,SUBASH ROAD,NAGPUR PIN-440018
PH :0712-2726200/72721690.

756.* SAGAR AUTOMOBILES (2667), MARUTI AUTHORISED SERVICE STATION,PLOT NO.3 NEAR PETROL PUMP,WARDHA ROAD UJJWAL NAGAR,NAGPUR PIN-440025
PH :0712-2293413/ 3095521/ 9422145365/9960695823.

757.* BALAJI MOTORS (3078), PLOT NO.18/27,NEAR NAKA NO.-1,KORADI ROAD,NAGPUR PIN-441111
PH :07120-9960634068.

758.## R. K. MOTORS (3023), 69 A V A LAYOUT,LAKADGANJ,NAGPUR PIN-440008
PH :0712-2730300/9422113088.

759.** SAGAR AUTOMOBILES (4971), A-15/28.MIDC,BUTTIBORI,NAGPUR PIN-440025
PH :-9422145365/8552082080.

760.## M S SERVICES (5339), 14 HILL ROAD,GANDHI NAGAR - NAGPUR,DISTRICT - NAGPUR,MAHARASHTRA PIN-440010
PH :-9373422822.

NANDED

761.## MARUTI CARES AND COLOURS (5778), LABH NAGAR,BACK SIDE OF SURABH HOTEL,NANDED,DISTRICT-NANDED,MAHARASHTRA PIN-431605
PH :-9225751444.

NANDURBAR

762.* MAULEE MOTORS (4736), SURVEY NO. 130/2, PLOT NO. 43,ADARSHA NAGAR, NIZAR ROAD,NANDURBAR,MAHARASHTRA PIN-425412
PH :02362-9822377931/261300.

NASHIK

763.## RACCA SERVICE (3720), (MR. RS RACCA),RACCA COLONY,SHARANPUR ROAD,NASIK PIN-422002
PH :0253-2570837/8796939960/8087924594.

764.## SAI AUTOMOBILES (3722), SAPAT COMPLEX,OPP. PRESS HOSPITAL,NASIK ROAD,NASIK ROAD PIN-422101
PH :-9822027931/2462300.

765.## HITECH AUTO SERVICES (4451), RAMESHWAR NAGAR,OPP NAVSHYA GANPATI,GANGAPUR ROAD,NASIK PIN-422005
PH :0253-9225142471.

NAVI MUMBAI

766.* BOSS (265), AT/P.O. - TURBHE,SECTOR-22,VASHI,NAVI MUMBAI PIN-400705
PH :022-27831354/27831358.

767.** CHETAN MOTORS (3143), PLOT NO.45/B SECTOR 19/A,OPP. GATE NO.2 DANA BAZAR,BEHIND SHAMIR VITHAL CO-OP BANK VASHI,NAVI MUMBAI PIN-400705
PH :022-27840564/27840565/27841566.

768.## C G MOTORS (4138), PAPR-73, TTC INDUSTRIAL AREA,RABALE, OPP RABALE RAILWAY STATION,THANE- BELAPUR ROAD,MAHARASHTRA PIN-400701
PH :-9821695355, 9820933338.

NIGDI

769.## SHALU AGENCY (2872), 516/27 PRADHIKARAN,NIGADI,PUNE PIN-411044
PH :020-7652631/7652966.

NIPHAD

770.## SHRI SAI SERVICE STATION (4452), NIPHAD AURANGABAD ROAD,NIPHAD,NASIK,MAHARASHTRA PIN-422101
PH :02550-240320/240321.

OMERGA

771.## SHREE SWAMI SAMARTH SERVICES (5874), 311/1,OPP. H.P. PETROL PUMP,NH-9,OMERGA,DISTRICT-OSMANABAD,MAHARASHTRA PIN-413606
PH :02475-252199/9422935656.

PACHORA

772.## POOJA MARUTI SERVICE CENTRE (5564), PLOT NO 75,PREM NAGAR ,KRISHNA PURI SHEVAR,PACHORA,DISTRICT - JALGAON,MAHARASHTRA PIN-424201
PH :02596-9890320803/2596247104.

PALGHAR

773.## SIDDHI MOTORS (5553), THEMBHEDE ROAD,GANESH KUND,PALGHAR, DISTRICT - THANE,MAHARASHTRA PIN-401404
PH :02525-256406/ 09890609107.

PANVEL

774.** IDEAL AUTOMOBILES (2279), IDEAL HOUSE,PLOT NO-83,PANVEL INDUSTRIAL CO OP ESTATE LTD. PANVE,DISTRICT - RAIGAD,(MAHARASHTRA) PIN-410206
PH :022-27451607/2250/31508709.

775.** GANGAL MOTORS (2934), PLOT NO.:125-127,SECTOR-1S,ROAD NO-5,BEHIND CIDCO GODOWN-NEW PANVEL,DISTRICT - RAIGAD,(MAHARASHTRA) PIN-410206
PH :022-27460525.

PARBHANI

776.## SAI SERVICING CENTRE (5252), P7/5 MIDC,PARBHANI,MAHARASHTRA PIN-431401
PH :02452-249099/9326147460.

PASHAN

777.* MARUTI CAR SANJIVINI (5278), SURVEY NO 5/2.SUTARWADI .SUSROAD.PASHAN,DISTRICT - PUNE,PUNE,MAHARASHTRA PIN-411021
PH :-9996073360.

PATHARDI

778.## SAGAR MOTORS (5979), OPP. TEHSIL KACHERI,NAGAR ROAD,TALUKA, PATHARDI,DISTRICT-AHMEDNAGAR,MAHARASHTRA PIN-414102
PH :0241-2429349/9822197969.

PEN

779.## NAVNATH AUTO (5677), OPPOSITE RAMWADI,S.T. STAND,NATIONAL HIGHWAY-17, TAL PEN,DISTRICT-RAIGAD,MAHARASHTRA PIN-402107
PH :02143-255948.

PHALTAN

780.## VORA AUTOMOTIVE (2436), SHINGNAPUR ROAD,KOLKI,PHALTAN PIN-415523
PH :02166-23562/9422606296.

PIMPALGAON

781.## ASHWAMEDHA AUTO (2435), "ASHWAMEDH",MUMBAI-AGRA HIGHWAY,PIMPLEGAON (B),DISTT. NASHIK PIN-422209
PH :02550-9766600064/8275015640.

PUNE

** A-Category Mass : Free & paid Service, Major repairs & Accidental repairs

C-Category Mass : Free & paid Service & Minor repairs

* B-Category Mass : Free & paid Service & Major repairs

D-Category Mass : Free Service & Minor repairs

MARUTI AUTHORISED SERVICE STATIONS (MASS) (AS ON 01.04.2017)

782.** SAINATH AUTOMOBILES INDUSTRIES (1569), SURVEY NO.36 PLOT NO.1,VADGAON KHURD SINHAGAD ROAD,NEAR GREEN FIELD HOTEL,PUNE PIN-411041
PH :-9890166886.

783.* SANTOOR CAR CARE (2053), ASHOK PLAZA,32/2 WADGAON SHERI NEAR WEIKFIELD,PUNE NAGAR ROAD,PUNE PIN-411014
PH :020-6687799.

784.* APPU SERVICE STATION (4927), BG/SEI 11/10,NEAR TELEPHONE EXCHANGE,MIDC, BHOSARI,PUNE (MAHARASHTRA) PIN-411026
PH :020-9422005332/27123838.

785.## APPU AUTOMOBILE (5029), MARUTI AUTHORISED REPAIR STATION,#81.SR NO 164. TALAWAD ROAD,KANBAY ROAD.TRIVENI NAGAR,AHARASHTRA PIN-412114
PH :-9371017595.

786.* ATHARVA CAR SERVICES (5161), GUJRATH COLONY,SARAF LANE,NEAR VANAZ COLONY,KOTHRUD,PUNE,MAHARASHTRA PIN-411038
PH :-9960690751/9960690761.

787.* MANAS AUTOMOTIVE (5443), SURVEY NO 2/4 PARRANKUTI.LANE NO.1.,KARVE NAGAR - PUNE,DISTRICT - PUNE,MAHARASHTRA PIN-411052
PH :020-65002239/9822043007.

788.* MARUTI CARE POINT (3337), S. NO 273/5,BANER ROAD,OPP. VARSHA PARK,BANER,PUNE,MAHARASHTRA PIN-411045
PH :020-5663231.

RAHURI

789.* ANAND MOTORS (4152), IN FRONT OF ASHWINI HOTEL,NAGAR MANMA ROAD,A/P RAHURI DIST-AHMADNAGAR,MAHARASHTRA PIN-413722
PH :02426-235662/9822759180/9822159180.

RAVER

790.## RUCHI MOTORS (2631), MARUTI AUTHORISED SERVICE STATION,RAVER,DISTT. JALGAON,(MAHARASHTRA) PIN-425508
PH :02584-9423188307/9423974064/250300.

ROHA

791.* AMIT MOTORS (4972), NANA SHANKAR SHETH ROAD,ROHA,DISTRICT - RAIGAD,MAHARASHTRA PIN-402109
PH :02194-9422096149/233290.

SAKURI

792.## SHREE SAI SERVICE CENTRE (5344), NAGAR-MANMAD ROAD .GODAVARI,HOTEL JEWEL .PO:SAKURI ,TAL:RAHATA,DISTRICT - AHMEDNAGAR,MAHARASHTRA PIN-422608
PH :-9970741777.

SANGAMNER

793.* SAI MOTORS (2840), NEAR GULEWADI PHATA,PUNE NASIK ROAD,SANGAMNER DIST. AHMEDNAGAR,(MHRS.) PIN-422608
PH :02424-227513.

SANGLI

794.** ASHOK AUTOMOBILES (3723), 595/B,M.G.ROAD,SANGLI PIN-416416
PH :0233-375961/9823053596.

795.## BALAJI AUTO SERVICE (1564), PLOT NO.43,GOLDEN PARK,BYPASS ROAD,SANGLI, DISTRICT-SANGLI,MAHARASHTRA PIN-416416
PH :-9822106126.

796.* AWATI MOTORS (4772), PADMAVATI COLONY,NEMINATH NAGAR VISHRAMBHAG,SANGLI,MAHARASTRA PIN-416415
PH :-9422407284.

SATANA

797.## PATHAK MOTORS (5037), YASHWANT NAGAR,TAHARABAD ROAD,SATANA,DISTRICT - NASIK,(MAHARASTRA) PIN-411014
PH :-9890216257.

SATARA

798.## SIDDHI AUTOMOBILES (5464), 294/A.DEGAON PATA - SATARA,RAHAMTPUR ROAD.MIDC SATARA,DISTRICT - SATARA,(MAHARASTRA) PIN-415004
PH :-9860639368.

SAWANTWADI

799.* VENKATESHA AUTO CARE (1659), PLOT NO.21 MUMBAI GOA HIGHWAY,KOLGAON-BHOM,SAWANTWADI, MAHARASHTRA PIN-416510
PH :02363-274164/271533/9423304639.

SHAHADA

800.## MATOSHREE AUTOMOBILES (2870), NO.558 SHAHADA DHONDAICHA ROAD,TAL. SHAHADA,NANDURBAR DISTT.,(MAHARASHTRA) PIN-425409
PH :02565-226030/227340/9890530937/9421726230/9403801484.

SHIRDI

801.## SHREE GANESH AUTO CARE (4268), POST SAKURI,TALUKA RAHATA,AHMEDNAGAR PIN-423107
PH :02423-243192/ 243450/9422726052.

SHOLAPUR

802.** BALAJI MOTORS (1930), 8536 B/1 MURARJI PETH,OPP. OLD PUNE NAKA OFFICE,SOLAPUR PIN-413002
PH :-629696/ 629595/9823111110.

SHRIRAMPUR

803.* G.K. MOTORS (2871), K.V. ROAD,SHRIRAMPUR,DISTT. AHMEDNAGAR PIN-413709
PH :952422-8446222297.

THANE

804.* PATRICIA AUTOMOBILES (529), 34 AMARGION SER.& OFFICE COMPLEX,AGRA RD.,THANE (MHRS) PIN-400601
PH :022-25471105/9987175866.

805.** THANAWALA MOTOR AGENCY (3724), DHIRAJ BAUG,L.B.S. MARG,NEAR HARINIWAS CIRCLE,THANE PIN-400602
PH :022-67302222.

806.** STERLING MOTOR GARAGE (555), OPP. RAVI STEEL INDUSTRIES,2ND POKHRAN ROAD,THANE PIN-400601
PH :022-25890325/ 25890892/25891981/9224019485.

807.* TOP GEAR AUTOMOBILES (4840), SAI NAGAR,GHODBUNDER ROAD,KASARVADAVALI,THANE (W) PIN-400601
PH :022-64509201/64526472.

808.* SEAN MOTORS (5377), DONTALAV - VATAR,(W),VIRAR SATPALA ROAD,TAL-VASAI, DISTT-THANE,MAHARASHTRA PIN-401301
PH :-9324003123.

ULHASNAGAR

809.* MODERN CAR CARE (3260), 171/2.RRV INDUSTRIAL AREA,BEHIND SAI BABA MANDIR, SHANTINAGAR,ULHASNAGAR,MAHARASHTRA PIN-421003
PH :0251-2732027/9322542027/9819692027.

810.* CHIMAN AUTOMOBILES (3845), NEAR KAJAL PETROL PUMP,BALANI COMPOUND,VITHALWADI STATION ROAD,ULHASNAGAR PIN-421003
PH :0251-2557790/2561627.

URAN

811.## SAI AUTOMOBILES (5665), STATE HIGHWAY NO.56,NEAR JASAI NAKA,JASAI VILLAGE, URAN,DISTRICT - RAIGAD,MAHARASHTRA PIN-410206
PH :-64213533.

VADA

812.## SAI MOTORS & SERVICE CENTRE (5675), AT-GANDRE,PO-TUSE,TAL-VADA-421303,DISTRICT - THANE,MAHARASHTRA PIN-421303
PH :-9270005533.

VITA

813.## SONA AUTOMOTIVE (5671), YASHWANT NAGAR,NEAR WATER TANK,ROAD NO.10 - VITA,DISTRICT - SANGLI,MAHARASHTRA PIN-415311
PH :-9960708270.

WAI

814.## ADITYA AUTO SERVICE (4271), WAI SATARA ROAD,WAI,SATARA DIST. PIN-412803
PH :02167-9423971005.

WARDHA

815.## BHARAT MOTOR (1631), NAGPUR ROAD,NALWADI,WARDHA,MAHARASHTRA PIN-442001
PH :07152-9881588388.

WARORA

816.## ROHIT AUTOMOTIVE (5873), NAGPUR,CHANDRAPUR ROAD,VINAYAK-,LAYOUT, TILAK WARD, WARORA,DISTRICT-CHANDRAPUR,MAHARASHTRA PIN-442907
PH :07176-281099/9226118165.

YAVATMAL

817.## RAMESH MOTORS (2024), GARDEN ROAD,YAVATMAL,MAHARASHTRA PIN-445001
PH :07232-243330/246660.

** A-Category Mass : Free & paid Service, Major repairs & Accidental repairs

* B-Category Mass : Free & paid Service & Major repairs

C-Category Mass : Free & paid Service & Minor repairs

D-Category Mass : Free Service & Minor repairs

818.## M.S. MOTORS (460), AMRAVATI ROAD HIGHWAY,LOHARA,YAVATMAL PIN-445001 PH :-249207/651565.

YEOLA

819.## BIJASANI AUTOMOTIVE (3041), NAGAR-MANMAD ROAD,YEOLA,DIST. NASIK (MAHARASHTRA) PIN-452005 PH :02559-09923204225/9423185025.

MANIPUR

IMPHAL

820.## BORDIN MARUTI GARAGE (4879), MOIRANGKHOM,LOKLAOBUNG,IMPHAL,MANIPUR PIN-795001 PH :0385-9436023659/2455460/2536551.

SENAPATI

821.## KOMUO MARUTI WORKS (4644), NH-39,TAPHOU RIKHUMAI,SENAPATI,MANIPUR PIN-795106 PH :-9436072671/9436422938.

MEGHALAYA

TURA

822.## MULTI MOBILE PRECISION (3222), OPP.MECOFED,CENTRAL GODOWN,NEW JAIL ROAD ARAI MILE,TURA PIN-794001 PH :03651-8974037020.

MIZORAM

CHAMPAI

823.# IRDIV- TC AUTO WORKS (5744), SVENTH DAY TLANG, ZOTLANG ROAD,NEW CHAMPHAI-CHAMPHAI,DISTRICT-CHAMPHAI ,MIZORAM PIN-796001 PH :-9862405715.

LUNGLEI

824.## LAWMA ENGINEERING WORKS (3125), A O C SQUARE,LUNGLEI,MIZORAM PIN-796701 PH :0372-2325035.

NAGALAND

DIMAPUR

825.** ERJO MOTORS (4871), 123 BANK COLONY,DIMAPUR,NAGALAND PIN-797112 PH :03862-231888.

ORISSA

ANGUL

826.## ZEET AUTOMOBILES (1573), NALCO NAGAR,KANDASAR,ANGUL,ORISSA PIN-759145 PH :06764-221885/9437065053.

BALANGIR

827.## ASHIRWAD AUTOMOBILE WORKS (3177), DAMJI GARAGE,THIKADARPARA,BALANGIR PIN-767001 PH :06652-233345/231896.

BALESHWAR

828.## AUTO CARE (432), AT - AZIMABAD,BALASORE,BALASORE PIN-757001 PH :06782-645321, 9437051944/9437285606.

829.* TEKNO INDIA (3666), D-2/9 INDUSTRIAL AREA,O.T. ROAD,BALASORE,(ORISSA) PIN-756003 PH :06782-266879/9437953595/9861034990.

BARBIL

830.## INDU MOTORS (3241), IN FRONT OF UTKAL AUTOMOBILES,JODA-BARBIL HIGHWAY,BARBIL,(ORISSA) PIN-758035 PH :06767-276158/ 276727/9337383947.

BARGARH

831.## CARSCAN (1164), PLOT - 1/1 INDUSTRIAL ESTATE,RAILWAY STATION ROAD,BARGARH PIN-768028 PH :06646-232820.

BHUBANESWAR

832.## INDO JAPAN SERVICE (4936), PLOT NO. 18, 19, 30 & 31, BHAGABANPUR INDUSTRIAL ESTATE,PO: PATRAPADA,BHUBANESHWAR,ORISSA PIN-752019 PH :0674-2470033, 6545624, 9861124660, 9861095444.

CUTTACK

833.* DURGA SERVICE CENTRE (427), NEAR PALAMANDAP, BADAMBADI,PO - ARUNODAY MARKET,DISTT - CUTTACK PIN-753012 PH :0671-2311261/2315762.

834.* AUTO MATES (426), MADHUPATNA,CUTTACK PIN-753010 PH :0671-2311646/2322646 /2322646.

DHENKANAL

835.## ANAND AUTOMOBILES (5449), ANAND NAGAR, IN FRONT OF TARINI MANDIR,DISTRICT - DHENKANAL,(ORISSA) PIN-759001 PH :06762-9437414972/243272.

JHARSUGUDA

836.## AUTO MECHANIKA (2638), S.H.-10 BEHERAMAL,JHARSUGUDA,ORISSA PIN-768203 PH :06645-273510/9040280001.

PARALAKHEMUNDI

837.## GANAPATI AUTOMOBILES (3178), B. SITAPUR,PARALAKHEMUNDI,DIST. GAJAPATI,(ORISSA) PIN-761200 PH :06815-322765/9437140023.

PURI

838.## URMILA MOTORS (5040), HERA GOHIRI SAHI CHOWK, PURI -1,DISTRICT - PURI,(ORISSA) PIN-752001 PH :06752-223820/9776008748/9861110745.

SAMBALPUR

839.# ANITA AUTO CARE (4834), SALIA BAGICHA,LIONS CLUB ROAD,KUMBHARPARA,SAMBALPUR (ORISSA) PIN-768001 PH :0663-9437068044/2403044/ 9861248403.

SEMILIGUDA

840.## ASHUTOSH MOTORS (5035), MAIN ROAD. NH-43,SEMILIGUDA,DISTRICT-KORAPUT,(ORISSA) PIN-764036 PH :-919437405417/9939639257.

PONDICHERRY

KARAIKAL

841.## MARUTI TECH (2669), NO.1, AKKARAIVATTAM,NAGAORE MAIN ROAD,OPP TO ONGC,KARAIKAL,DISTRICT-KARAIKAL,PONDICHERRY PIN-609604 PH :04368-227101/9842383125.

PONDICHERRY

842.** S D K MOTORS (471), PLOT NO.12,100 FEET ROAD,OZHANDAI KEERAPALAYAM MUDALIARPET,PONDICHERRY PIN-605004 PH :0413-2358540/9843045689.

843.* A.P.P. MARUTI MOTORS (2670), PLOT NO.6 GUNDU SALAI ROAD,NATESAN NAGAR,NEAR 100 FEET ROAD,PONDICHERRY PIN-605005 PH :0413-2240844/9894059004.

844.## MARUTI MISSION (5067), 60 RAGAVENDIRA NAGAR. KAMARAJ SALAI,THATTANCHAVADY PONDICHERRY,TINDIVANAM ROAD,PONDICHERRY PIN-605009 PH :0413-2241100/9786589000.

PUNJAB

AHMEDGARH

845.## GAHIR AUTOMOBILES (2877), LUDHIANA MALER KOTLA ROAD,VILL. GOPALPUR CITY,AHMEDGARH,(PUNJAB) PIN-141001 PH :01628-9878854118.

AJNALI

846.# VISHWAKARMA MOTORS (5666), NEAR VIMAL DHARAMKANTA - AJNALI,DISTRICT - FATEHGARH SAHIB,PUNJAB PIN-140406 PH :-9814528084.

AMLOH

847.## BINDRA MOTORS (5844), NEAR DESH BHAGAT COLLEGE SONTI,AMLOH,DISTRICT-FATEH GARH SAHIB,PUNJAB PIN-147301 PH :-9814882000.

AMRITSAR

848.** KAPOOR'S KAR KARE (737), I/S MAHA LAKSHMI,CALICO PRINTING MILLS,OLD JAIL ROAD,AMRITSAR(PUNJAB) PIN-143001 PH :-9814213113.

849.* SAGGU SERVICE STATION (733), HIDE MARKET,AMRITSAR (PUNJAB),AMRITSAR (PUNJAB) PIN-143001 PH :-9888005610.

850.** HANSON AUTOMOBILES (1722), MAQBOOL PURA,G.T. ROAD,AMRITSAR PIN-143001 PH :-9815167669,8427010988.

851.** JACKSON LUBRICANTS (364), 16 COURT ROAD,NEAR RAVI GAS AGENCY,AMRITSAR PIN-143001 PH :-9814299944.

BANUR

852.## AMRIK SERVICE STATION (2433), PATIALA ROAD,BANUR,DISTT. PATIALA (PUNJAB) PIN-140601 PH :-9815591325.

BARNALA

853.* PUNJAB MOTOR GARAGE (6222), DHANAULA ROAD,BARNALA (PUNJAB),BARNALA (PUNJAB) PIN-148101 PH :-9876130360.

854.## GAURAV MOTORS (4962), DHANAULA ROAD,BARNALA,DISTRICT SANGRUR,PUNJAB PIN-148101 PH :01679-9317512916.

BHADSON

855.## FRIENDS MOTORS (2233), NABHA ROAD,BHADSON,DISTT. PATIALA,(PUNJAB) PIN-147202 PH :-9815700778.

** A-Category Mass : Free & paid Service, Major repairs & Accidental repairs

C-Category Mass : Free & paid Service & Minor repairs

* B-Category Mass : Free & paid Service & Major repairs

D-Category Mass : Free Service & Minor repairs

MARUTI AUTHORISED SERVICE STATIONS (MASS) (AS ON 01.04.2017)

BHATINDA

856.## SUPER AUTOMOBILES (6232), TINKONI,GONIANA ROAD,BHATINDA PIN-151001
PH :0164-9814036163.

857.** MODERN MOTORS (6234), OPP. T.V. TOWER,MANSA ROAD,BHATINDA PIN-151001
PH :-9814177075.

858.## KRISHNA AUTOS (4571), 40 FEET NAMDEV ROAD,NEAR DELHI ESCORTS HEART HOSPITAL,BATHINDA,PUNJAB PIN-151001
PH :0164-9888671810.

BUDHLADHA

859.## JINDAL AUTOMOBILES (2147), NEAR P.S.E.B.,BHIKHI ROAD,BUDHLADA,DISTT. MANSA PIN-151502
PH :-9815516964.

DERABASSI

860.## BINDAL AUTOMOBILES (1248), CHANDIGARH AMBALA ROAD,PARAS RAM MARKET,DERA BASSI PIN-140507
PH :01762-9914449711.

DHURI

861.## SHIV MOTORS (1962), NEAR OCTROI POST,SANGRUR ROAD,DHURI PIN-148024
PH :-9872851068.

DINANAGAR

862.## D.S. MARUTI SERVICE STATION (3333), G.T. ROAD,DINA NAGAR,DIST. GURDASPUR,(PUNJAB) PIN-143531
PH :-9814695433.

DIRBA

863.## PENTAGON MECHANICAL WORKS (2564), JIND-SANGRUR ROAD,DIRBA,DISTT. SANGRUR,(PUNJAB) PIN-148035
PH :01672-242525.

DORAHA

864.* FATEH MOTORS (2048), G.T. ROAD,DORAHA,(LUDHIANA) PIN-141421
PH :01628-9814031784.

FAZILKA

865.## BAHL MOTORS (6229), ABOHAR ROAD,FAZILKA PIN-152123
PH :01638-9888620550.

FEROZEPUR

866.## SUTLEJ AUTOMOBILES (3568), G.T. ROAD,FEROZEPUR CANTT,(PUNJAB) PIN-152001
PH :01632-9815144790.

867.## BOBB MOTORS (4378), NEAR BSF COLONY,MOGA ROAD,FEROZEPUR CANTT PIN-152001
PH :01632-9814090331.

GIDDERBAHA

868.* JIWAN CAR CENTRE (3442), BHATINDA ABOHAR,NATIONAL HIGHWAY,GIDDERBAHA,DIST. MUKETSAR (PUNJAB) PIN-152101
PH :01637-9814730286.

GOINDWAL SAHIB

869.## DAS MOTORS (3537), KAPURTHALA CHOWK,GOINDWAL SAHIB,DISTT. AMRITSAR,(PUNJAB) PIN-143429
PH :01859-9914699121.

GORAYA

870.## GORAYA AUTOMOBILES (4434), G.T. ROAD,GORAYA,DISTT PHAGWARA,PUNJAB PIN-144409
PH :01827-9814002617.

GURDASPUR

871.* VIJAY SERVICE STATION (749), NEAR RAILWAY CROSSING,PATHANKOT ROAD,GURDASPUR,(PUNJAB) PIN-144001
PH :-9814437637.

HOSHIARPUR

872.## JOGINDER MOTORS (2268), BYE PASS TANDA ROAD,HOSHIARPUR PIN-146001
PH :-9216519763.

JAGRAON

873.## DHALIWAL AUTOMOBILES (2035), NEAR AJANTA PETROL PUMP,G.T. ROAD,JAGRAON DISTT. LUDHIANA,(PUNJAB) PIN-141003
PH :01624-9814318600.

JALANDHAR

874.** KAAR KARES (725), G.T.ROAD,JALANDHAR,(PUNJAB) PIN-144001
PH :0181-231938.

875.* PUNJAB MOTOR GARAGE (1575), HMV CHOWK,G.T. ROAD,JALANDHAR PIN-144008
PH :-9317512360.

876.* KAPOOR MOTOR GARAGE (1649), OPP. SPORTS COLLEGE,KAPURTHALA ROAD,JALANDHAR CITY PIN-144008
PH :-9815543853.

877.## CITY POINT SERVICE STATION (4528), AVTAR NAGAR ROAD,BEHIND T.V. CENTRE,OPP HOTEL REGENT PARK,JALANDAHR PIN-144008
PH :0181-9888382255.

KAPURTHALA

878.## T.S. WALIA MOTORS (267), MANSOORWAL,JALLANDHAR ROAD,KAPURTHALA PIN-144601
PH :-9357211525.

879.## AVTAR AUTO TECH (5329), KANJLI ROAD, NEAR OCTROI,KAPURTHALA,PUNJAB PIN-144601
PH :-9888262026.

KURALI

880.## VISHWAKARMA MOTORS (3335), PRAKASH ICE FACTORY,CHANDIGARH ROAD,KURALI,(PUNJAB) PIN-140103
PH :01888-9814273873.

LALRU

881.## VIKAS MOTORS (2777), IOC PETROL PUMP,AMBALA CHANDIGARH ROAD,LALRU DISTT. PATIALA,PUNJAB PIN-147001
PH :-9216069888.

LUDHIANA

882.** PUNJAB AUTO CENTRE (6221), OPP TELEPHONE EXCHANGE,BHARAT NAGAR CHOWK,LUDHIANA PIN-141001
PH :-9855117003.

883.* REEHAL AUTOMOBILE SERVICES (1176), OPP. JAMALPUR POWER HOUSE,CHANDIGARH ROAD,LUDHIANA PIN-141010
PH :0161-2680309.

884.## VISHAL AUTOMOBILES (1262), G.T. ROAD,DHOLEWAL,LUDHIANA PIN-141003
PH :-9815206060.

885.## SATNAM MOTOR WORKSHOP (4533), OPP MILK PLANT,FIROZPUR ROAD,LUDHIANA PIN-141001
PH :0161-9855228591.

886.## STAR AUTOS (4650), JALANDHAR BY PASS,G.T. ROAD,LUDHIANA PIN-141003
PH :0161-9216844220.

MALOUT

887.## DELHI MOTORS (6225), TINKONI CHOWK,BHATINDA ROAD,MALOUT PIN-152107
PH :-9814874061.

MANDI GOBINDGARH

888.## NATIONAL MOTORS (1070), G.T. ROAD,NEAR P & S BANK,MANDI GOBINDGARH PIN-147301
PH :-9876181801.

MANSA

889.## RAJ AUTOMOBILES (2162), NEAR N.M. COLLEGE,MANSA,(PUNJAB) PIN-151505
PH :01652-9872679591.

MOGA

890.* GURU NANAK MOTOR REP. WORK (732), G.T.ROAD,MOGA,(PUNJAB) PIN-142001
PH :-9914121387.

MOHALI

891.** MOHALI MOTORS (756), C-55 INDUSTRIAL AREA,PHASE-VI,S.A.S. NAGAR,MOHALI PIN-160055
PH :-9501506065.

892.** SETHI MOTORS (4742), PLOT NO. E-159,INDUSTRIAL AREA, PHASE-7,MOHALI,PUNJAB PIN-160055
PH :-9814307002.

893.## UNIPOINT (5043), PLOT NO, 593,INDUSTRIAL AREA PHASE-IX. MOHALI,DISTRICT - MOHALI,(PUNJAB) PIN-160055
PH :-9316108300.

894.** BENZ AUTO SCAN (5734), E-153, PHASE 7,INDUSTRIAL AREA -MOHALI,DISTRICT-MOHALI,PUNJAB PIN-160059
PH :0172-9815654303.

MOONAK MANDI

895.## GOYAL SERVICE STATION (6034), TOHANA-SURJAN, BHAINI ROAD,MOONAK MANDI,DISTRICT-SANGRUR,PUNJAB PIN-148033
PH :-08427346677.

MORINDA

896.## SONY MOTOR PALACE (1077), SIRHIND ROAD,MORINDA PIN-140101
PH :-9818612477.

MUKERIAN

897.## NEW MODERN AUTOMOBILES (4437), G.T. ROAD,MUKERIAN,PUNJAB PIN-144211
PH :01883-9463292013.

898.* MARSHAL SALES CORPORATION (5251), PATHANKOT RAOD. NEAR RADHA SOAMI,SATSANG GHAR - MUKERIAN,DISTRICT - HOSHIARPUR,PUNJAB PIN-144211
PH :-9872335923.

MUKTSAR

** A-Category Mass : Free & paid Service, Major repairs & Accidental repairs

* B-Category Mass : Free & paid Service & Major repairs

C-Category Mass : Free & paid Service & Minor repairs

D-Category Mass : Free Service & Minor repairs

899.## MALWA MARUTI CENTRE (4764), KOTKAPURA ROAD,MUKTSAR,PUNJAB PIN-152026
PH :01633-9914133987.

NAKODAR

900.## MEHTA MOTORS (3531), KHADDAR BHANDAR ROAD,NAKODAR PIN-141310
PH :-9815600082.

PATIALA

901.## RAJINDRA MOTORS (4935), C-177,INDUSTRIAL FOCAL POINT,PATIALA,PUNJAB PIN-140401
PH :0175-9316200335.

902.** PARAS MOTORS (4778), PLOT NO. 25-A,NEAR HOTEL FLYOVER FACTORY AREA,PATIALA,PUNJAB PIN-147001
PH :-9814089861.

PATTI

903.## ANU AUTOMOBILE (2747), AMRITSAR ROAD,NEAR RADHA SWAMI SATSANG,PATTI DISTT. AMRITSAR,(PUNJAB) PIN-143001
PH :01851-9876342843.

PHAGWARA

904.## SWAMI MOTORS (3774), (PAMMI W/SHOP),OPP. B.N. DUGGAL PETROL PUMP,G.T. ROAD,PHAGWARA DIST. KAPURTHALA PIN-144401
PH :-9815107989.

905.## VIVA MOTORS (4740), G.T. ROAD,PHAGWARA,DISTRICT-KAPURTHALA, PUNJAB PIN-144463
PH :01824-9814310021.

PHILLAUR

906.## DHANJU MOTORS (1647), NURMEHAL ROAD,PHILLAUR,DISTT. JALANDHAR PIN-144410
PH :-9814454963.

QADIAN

907.# HI-TECH AUTOMOBILES (4945), VILL NATHPUR BATALA ROAD,QADIAN,DISTRICT-GURDASPUR,PUNJAB PIN-143516
PH :-9464066479.

RAIKOT

908.## RANA SUPREME MOTOR GARAGE (3732), NEAR GURUDWARA TAHLIANA SAHIB,BARNALA BYE PASS ROAD,RAIKOT,DISTT. LUDHIANA (PUNJAB) PIN-141109
PH :01624-9814265791.

RAJPURA

909.## NOOR MOTORS (3045), PATIALA ROAD,RAJPURA,(PUNJAB) PIN-140401
PH :01762-9855421786.

RAMPURAPHUL

910.## VIRDI MOTOR GARAGE (3046), BARNALA ROAD,RAMPURAPHUL,DISTT. BATHINDA,(PUNJAB) PIN-151103
PH :01651-9815472217.

911.## BALAJI AUTOMOBILES (4443), BARNALA ROAD,RAMPURA PHUL,DISTT BHATINDA,PUNJAB PIN-151103
PH :01651-9815443444.

SAMANA

912.* CITY MOTORS (1867), P.B.NO.11,MAIN ROAD,SAMANA,DISTT. PATIALA (PUNJAB) PIN-147101
PH :01764-9814864180.

SANGRUR

913.** RAKESH MARUTI SERVICE (6325), JIND - DELHI ROAD,NEAR E.S.I. DISPENSARY,SANGRUR PIN-148001
PH :01672-9814064202.

914.## SANGRUR MARUTI CENTRE (1632), PATIALA ROAD,OPP. MILITARY CAMPUS,SANGRUR,(PUNJAB) PIN-148001
PH :-01672-232340.

SIRHIND

915.## BADRI DHAM CAR SERVICE (1062), G.T. ROAD,SIRHIND PIN-140406
PH :-9417045975.

916.## MALHOTRA MOTORS (4657), OPP. INCOME TAX OFFICE,SIRHIND,DISTT FATEHGARH SAHIB,PUNJAB PIN-140406
PH :-9815844008/500600.

SULTANPUR LODHI

917.## HANDA MOTORS (2776), TALWANDI ROAD,SULTANPUR LODHI,DISTT. KAPURTHALA,(PUNJAB) PIN-144626
PH :01828-9814213113.

SUNAM

918.## SUNAM AUTOMOBILES (3924), PATIALA ROAD,NEAR OCTROI POST,SUNAM,DISTT. SANGRUR PIN-148028
PH :-01676-3026118.

TANDA

919.## MALWA AUTO CARE CENTRE (2073), G.T. ROAD BY-PASS,TANDA,DISTT. HOSHIARPUR,(PUNJAB) PIN-146001
PH :-9814392103.

TARN TARAN

920.## GURMEET MOTORS (4757), CHABHAL KHURD,TARN TARAN,DISTRICT-AMRITSAR,PUNJAB PIN-143001
PH :-9356115101.

ZIRA

921.## NEW AUTOMOBILES (5477), NEW TALWANDI ROAD, ZIRA,DISTRICT - MOGA,PUNJAB PIN-142047
PH :01682-9463240231.

RAJASTHAN

ABU ROAD

922.## UNIQUE MOTORS (4923), MOUNT ROAD,AKRABHATTA,ABU ROAD,(RAJASTHAN) PIN-307026
PH :02974-228414/9929177781.

AJMER

923.## ASHOK AUTOMOBILES (1121), BYEPASS ROAD,PARVATPURA,IND.AREA,AJMER (RAJASTHAN) PIN-305001
PH :0145-2695233/2695076.

ALWAR

924.## VERTEX AUTOMOBILES PVT. LTD. (1944), CHANDUKA BHAWAN,SWARG ROAD,ALWAR PIN-301001
PH :0144-2335733/2342117/9828233299.

925.## POOJA MOTORS (5439), POOJA MOTORS,NEAR AMARNATH PETROL,PUMP, DELHI ROAD ,MUNGSKA - ALWAR,DISTRICT - ALWAR,RAJASTHAN PIN-301001
PH :0144-9414640279/2700921/2371382.

BAGRU

926.## NARAYAN MOTORS (5272), N.H.8. AJMER ROAD- BAGRU,DISTRICT - JAIPUR,RAJASTHAN PIN-302001
PH :0141-2864504/5123711.

BARMER

927.* VEW SERVICE (1238), S-181 & 182,RIICO,BARMER,(RAJASTHAN) PIN-344001
PH :02982-223329/227339/9410158584.

BASSI

928.## VARDHANI MOTORS (5358), NEAR NALAYA BASSI,DISTRICT - JAIPUR,RAJASTHAN PIN-304505
PH :01429-9414312552/222317.

BEHROR

929.## K.L. INTERNATIONAL AUTOMOBILES (1763), DELHI JAIPUR HIGHWAY,VILLAGE DHAMI,P.O. KANKARDOPA,TEHSIL BEHROR DIST. ALWAR (RAJASTHAN) PIN-301701
PH :01492-221396/9414014603.

BHARATPUR

930.** CLASSIC MOTORS (2348), DEEG ROAD,KUMHER GATE,BHARATPUR,(RAJASTHAN) PIN-321001
PH :05644-229301/9414026545.

BHILWARA

931.* QUICK SERVICES (3473), SABUN MARG,PURAN DAS JI KI BAGICHEE,BHILWARA PIN-311001
PH :01482-226536/223456.

932.## NATIONAL SERVICE CENTER (4761), SANGANER COLONY,KOTA ROAD,BHILWARA,RAJASTHAN PIN-311001
PH :01482-329586/256146.

BHINIMAL

933.## GURJAR MOTORS (5567), RAMSIN ROAD,OPP PRADEEP PETROL PUMP,BHINMAL,DISTRICT - JALOR,RAJASTHAN PIN-343029
PH :02969-290962.

BHIWADI

934.** WHEEL-O-CITY (4246), E-7D (A) PHASE-1,NEAR RIICO CHOWK,BHIWADI,RAJASTHAN PIN-301019
PH :01493-225555/290962.

BIKANER

935.## GENERAL AUTOMOBILES (1123), RANI BAZAR,RAIWAY CROSSING,BIKANER (RAJASTHAN) PIN-334001
PH :0151-2200338/2549072.

936.## VISHI MOTORS (5559), PLOT NO 55(A) ,I.A. RANI BAZAR-BIKANER,DISTRICT - BIKANER,RAJASTHAN PIN-334001
PH :-9829027128.

BUNDI

937.## SHREE JI MOTORS (2174), OPP. KUMBHA STADIUM,KHOJA GATE,BUNDI,(RAJASTHAN)PIN-323001
PH :0747-2443181/5120455.

CHITTORGARH

938.## SISODIA MOTORS (5673), 31.OLD INDUSTRIAL AREA,BYE PASS ROAD,CHITTORGARH,DISTRICT - CHITTORGARH,RAJASTHAN PIN-312001
PH :01472-241476.

** A-Category Mass : Free & paid Service, Major repairs & Accidental repairs

C-Category Mass : Free & paid Service & Minor repairs

* B-Category Mass : Free & paid Service & Major repairs

D-Category Mass : Free Service & Minor repairs

MARUTI AUTHORISED SERVICE STATIONS (MASS) (AS ON 01.04.2017)

CHOMU

939.## SHREE LAXMI MOTORS (3072), MORIJA ROAD,CHOMU,JAIPUR,(RAJASTHAN) PIN-303702
PH :01423-207248/9828160281.

CHURU

940.* ABS MOTORS (2978), JAIPUR ROAD,CHURU,(RAJASTHAN) PIN-331001
PH :01562-252333/257333.

DAUSA

941.## BALAJI MOTORS (4564), NEW MANDI ROAD,NEAR TRANSFORMER,DAUSA PIN-303303
PH :01427-9414273443/9828169601.

DHAULPUR

942.## NARSING SERVICE CENTRE (3074), NEAR JAGDISH TALKIES,BARI ROAD,DHOLPUR,(RAJASTHAN) PIN-328001
PH :05642-223888/231888.

943.** NARAYAN MOTORS (3345), G.T. ROAD,DHOLPUR,(RAJASTHAN) PIN-328001
PH :05642-240697/9414027335.

DIDWANA

944.## SANTOSH AUTOMOBILES (5450), SANTOSH ATUOMOBILES ,KUCHAMAN ROAD,DIDWANA,DISTRICT - NAGAUR,(RAJASTHAN) PIN-341303
PH :01580-9414118142/220909.

DUDU

945.## NEETA AUTOMOBILE (4855), C/O NEW JAIN GUEST HOUSE,NH-8, JAIPUR AJMER ROAD,DUDU, RAJASTHAN PIN-302006
PH :01428-513229/9828307560.

JAIPUR

946.## SUPREME MOTORS (1130), A-25 ASSAM MANSION,TRANSPORT NAGAR,JAIPUR PIN-302003
PH :0141-2617030/4033993.

947.* RIGHTWAYS CO. (1131), KISHANPOLE BAZAR,JAIPUR,JAIPUR PIN-302001
PH :0141-2372436/4022436.

948.* SERVICE CENTRE (1139), OPP. TOURIST HOTEL,M.I. ROAD,JAIPUR PIN-302001
PH :0141-2374009/4009469.

949.** CAR CLINIC (1141), PLOT NO.6,GIRDHAR COLONY,SIKAR ROAD,JAIPUR PIN-302013
PH :0141-2232790/3293308.

950.** JAI SHRI RAM AUTO SERVICE CENTRE (1140), OPP. SHYAM NAGAR,AJMER ROAD,JAIPUR PIN-302026
PH :0141-2221241/9829055605.

951.** SAISHA MOTORS (1764), MAIN SHIPRA PATH,OPP. SECTOR 93,AGARWAL FARM,JAIPUR PIN-302020
PH :0141-2399196/9414454820.

952.* AMGI AUTOMOBILES (1938), AIRPORT CIRCLE,KOTA ROAD,JAIPUR PIN-302011
PH :-550689.

953.## J.K. AUTOMOBILES (2058), 38 SUSHILPURA,AJMER ROAD,JAIPUR PIN-302007
PH :0141-9928999044/2810500.

954.* SHARP MOTORS (2032), J-3 HIMMAT NAGAR,MAIN TONK ROAD,GOPAL PURA CIRCLE,JAIPUR PIN-302004
PH :0141-2705493/2211386.

955.## LAXMI MOTORS (2576), 24 GANGA JAMUNA CROSSING,OPP. JK PETROL PUMP,NEAR SANGANER ROAD MANSAROVAR,JAIPUR PIN-302019
PH :014-5051892/5145892.

956.## ALFA MOTORS (3347), MAHALAXMI NAGAR,OPP. HEERAPURA POWER HOUSE,AJMER ROAD,JAIPUR PIN-302006
PH :0141-6457989/2297229/9829014959.

957.## TOSHNIWAL AUTOMOBILES (3475), 131 SHRI GOPAL NGAR,GOPALPURA BYEPASS,JAIPUR,(RAJASTHAN) PIN-302015
PH :0141-2504296/5063836.

958.* M. R. MOTORS (4857), PLOT NO. 120-121 & 125-126,VANE VIHAR, 200FT BYE PASS,JHOTWARA,JAIPUR (RAJASTHAN) PIN-302016
PH :0141-9314881528/2340196.

959.## A 1 MOTORS (4856), D-28 MALVIYA NAGAR,,INDUSTRIAL AREA JAIPUR,DISTRICT - JAIPUR,RAJASTHAN PIN-302017
PH :-9414047628.

960.## SRINATH ENTERPRISES (4852), GOPALPURA BYEPASS.NEAR -DELHI KISHANGARH,HIGHWAY, JAIPUR,DISTRICT - JAIPUR,RAJASTHAN PIN-302018
PH :0141-9414044655/3234798.

961.## KRISHNA AUTOMOBILES (5363), B-27 SUNDAR NAGAR .MANSAROVAR,JAIPUR,DISTRICT - JAIPUR,RAJASTHAN PIN-302020
PH :0141-3107748.

962.## EDEN AUTO PARTS & SERVICE CENTER (5473), CC-134 ,135, GOLE MARKET, NEAR,MAA KA HOTEL, JAWAHAR NAGAR,JAIPUR,(RAJASTHAN) PIN-302004
PH :0141-2650242/9799296.

963.## KATARIA MOTORS (2577), 9-A NEMINAGAR VISTAR,AMRAPALI MARG,VAISHALI NAGAR,JAIPUR PIN-302021
PH :0141-2350904/9414468024/2352136.

JAISALMER

964.## R.R. AUTOMOBILES (1473), OPP. GEETA ASHRAM,JAISALMER,(RAJASTHAN) PIN-345001
PH :02992-9414150203.

JHUNJHUNU

965.## DADHIMATI MOTORS (1648), OPPOSITE RSEB OFFICE,BAGAR ROAD,JHUNJHUNU,(RAJASTHAN) PIN-333023
PH :01592-233853/9414346562.

966.## VISHWAKARMA AUTOMOBILES (3071), HPC DEALER,RANI SATHI ROAD,JHUNJHUNU,(RAJASTHAN) PIN-333001
PH :015972-32441.

JODHPUR

967.* P.D. MOTORS (3340), NATIONAL HIGHWAY NO. 65,PALI ROAD,NEAR JHALAMAND CHORAYA,JODHPUR PIN-342005
PH :0291-2724485/2722495.

968.## DEORA MOTORS (5353), UPPER UNDER BRIDGE .PAOTA 'C' ROAD,JODHPUR,DISTRICT - JODHPUR,RAJASTHAN PIN-342006
PH :0291-9829026069/2550707.

KALWAR

969.## ROHLANIYA MOTORS (5554), KALWAR MAIN TIRHIA ,NEAR KHARBAS,NEAR PETROL PUMP, JHOTWARA ROAD,DISTRICT - KALWAR,RAJASTHAN PIN-302017
PH :0141-9829055634.

KISHANGARH

970.## RADHA SWAMI AUTOMOBILES (440), MADANGANJ,KISHANGARH,(RAJASTHAN) PIN-305801
PH :01463-244423/9252059798.

KOTA

971.## FRIENDS AUTOMOBILES (3679), KOTA BUNDI ROAD,NH 12,OPP. HOTEL MENAL RESIDENCY,KOTA PIN-324008
PH :0744-2372360/9828529479.

KOTPUTLI

972.## VIKAS MARUTI (4970), NH-8,NEAR MNA GAS AGENCY GODOWN,KOTPUTLI,RAJASTHAN PIN-303108
PH :1421-9352307313.

KUCHAMAN

973.## DALUKA AUTO SALES (4565), NEAR MEENU AUTO TYRE,DIDWANA ROAD,KUCHAMAN,RAJASTHAN PIN-341508
PH :01586-220215/ 9414433240.

MAKRANA

974.## GEHLOT MOTORS (454), OPPOSITE TO G.S.S,MANGLANA ROAD,MAKRANA,RAJASTHAN PIN-341505
PH :01588-243076/243376.

MERTA

975.## DELUX CAR SERVICE CENTRE (3856), KUCHERY ROAD,MERTA CITY,DISTT. NAGAUR PIN-341510
PH :01590-230559/9460066196.

NAGAUR

976.* CLASSIC AUTOMOBILES (1179), DIDWANA ROAD,(DELHI GATE),NAGAUR,(RAJASTHAN) PIN-341001
PH :01582-242646/243019/9414235552.

NEWAI

977.## HEENA MOTORS (5568), NEWAI BYEPASS ,NEAR JHILAY MOAD,NEWAI,DISTRICT - TONK,RAJASTHAN PIN-304021
PH :-9413063376,7877663246.

PILANI

978.## MARUTI CARE CENTRE (3073), RAJGARH ROAD,SHANTI NAGAR,PILANI DISTT. JHUNJHUNU,RAJASTHAN PIN-333031
PH :01596-242232/244459.

PINDWARA

979.## RUNEJA MOTORS (5758), NH 14,OPP PATNAIK MIDWAYA,PINDWARA,DISTRICT-SIROHI,RAJASTHAN PIN-307022
PH :-9461221104.

RAILMAGRA

980.## SAI MOTORS (5779), DARIBA FATEHNAGAR ROAD,BORIWAL,FILLING STATION, RAILMAGRA,DISTRICT - RAJSAMAND,RAJASTHAN PIN-313329
PH :-9460725455.

RAINWAL

981.## MAHALAXMI AUTO CARS (5566), OPP ROHINI NAGAR IST,PHAGU ROAD - RAINWAL,DISTRICT - JAIPUR,RAJASTHAN PIN-302025
PH :0141-9928089224.

RAJSAMAND

** A-Category Mass : Free & paid Service, Major repairs & Accidental repairs

C-Category Mass : Free & paid Service & Minor repairs

* B-Category Mass : Free & paid Service & Major repairs

D-Category Mass : Free Service & Minor repairs

982.## VIPUL SHARMA (2170), C/O N.L. SHRIMALI,BEHIND PAWAN HOTEL,EXCISE OFFICE KI GALI,RAJNAGAR DIST. RAJSAMAND (RAJ.) PIN-313 326
PH :02952-224108/223508.

RAWATBHATA

983.## APNA MARUTI GARAGE (5940), OPP. RAM TEKRI MANDIR,PRATAP MARKET,MAIN ROAD, RAWATBHATA,DISTRICT-CHITTORGARH,RAJASTHAN PIN-323305
PH :-9461221104.

SALUMBAR

984.## SWASTIK MOTORS (5974), GANESH GHANTI, BANSWARA ROAD,SALUMBAR,DISTRICT-UDAIPUR,RAJASTHAN PIN-313027
PH :02906-231269/9414759341.

SANCHOR

985.## S.M. RAO AUTOMOBILES PVT. LTD. (5878), 197, KHASARA NO 643/455, NH-15, GARDHALI,SANCHOR,DISTRICT-JALOR,RAJASTHAN PIN-343041
PH :2979-223740/9982214381.

SAWAI MADHOPUR

986.## MAHALAXMI AUTOMOBILES (5757), WARD NO 4,BYE PASS ROAD,SHRI MADHOPUR,DISTRICT- TONK,(RAJASTHAN) PIN-332715
PH :-9887498033.

SIKAR

987.** RAJ AUTOMOBILES (5534), SUSHIL TRADING CO. STATION ROAD,SIKAR,DISTRICT - SIKAR,RAJASTHAN PIN-332001
PH :01572-240721/240722.

SRIGANGANAGAR

988.## ROHIT UDYOG (1132), 75 K-BLOCK,SRIGANGANAGAR PIN-335001
PH :0154-9414093565/2474823.

989.* NAGPAL MOTORS (3341), NAGPAL COMPLEX,SUKHARIA CIRCLE,SRIGANGANAGAR PIN-335001
PH :0154-9414090666.

SUJANGARH

990.## SHRI CHARBHUJA MARUTI (4924), LANDU ROAD,SUJANGARH,DISTRICT-CHURU,RAJASTHAN PIN-331506
PH :01568-222291/ 9828118827/9783455755.

SURATGARH

991.## ROHIN SERVICE STATION (2646), N.H.15 BIKANER ROAD,OPP. G.S.S. POWER HOUSE,SURATGARH,(RAJASTHAN) PIN-335804
PH :01509-222514/9413377914.

TIJARA

992.## SANJAY MOTORS (5875), ALWAR ROAD,NEAR BOLLYWOOD FARM,TIJARA,DISTRICT-ALWAR,RAJASTHAN PIN-301001
PH :-9414215875/9251415875.

TONK

993.## SUMIT MARUTI (4566), KOTA ROAD,TONK,RAJASTHAN PIN-304001
PH :0143-9214659749/2253228.

UDAIPUR

994.** ALOK AUTOMOBILES PVT. LTD. (1977), B.N. COLLEGE PREMISES,OPP. DALAL PETROL PUMP,SEVASHRAM ROAD,UDAIPUR PIN-313001
PH :0294-411463.

995.** SHREE SAI CAR CARE (2376), PUNJAWATI,PULLA,UDAIPUR PIN-313001
PH :0294-3299901/9414166770.

TAMIL NADU

AMBUR

996.## MARUTHI MOTORS (2864), 10-C M.C. ROAD,AMBUR,(TAMIL NADU) PIN-635802
PH :04174-244880/9443637645.

ARAVAKURICHI

997.# GOWRI MARUTI (5570), OPPOSITE IOCL PETROL PUMP,NH-7,ARAVAKURICHI,DISTRICT - KARUR,TAMILNADU PIN-639201
PH :-9994818043.

ARCOT

998.## HARI AGENCIES (468), 12-A ANNA SALAI,ARCOT N.A.A.DT. PIN-632503
PH :04172-234050/9442225070.

ATTUR

999.## GANESAA MOTORS (4538), 1/1-D ARANGA BALA NAGAR,SALEM CUDDLORE MAIN ROAD,NARASINGARAM,ATTUR (TAMIL NADU) PIN-636108
PH :04282-9443273866/281966.

AVINASHI

1000.## K.P.K AUTOMOTIVE (5547), SF NO.460/2,TIRUPPUR MAIN ROAD,AVINASHILINGAMALAYAM,AVINASHI, DISTRICT-COIMBATORE,TAMILNADU PIN-641654
PH :04296-275784/9994937784.

BHAVANI

1001.## CAR ZONE AUTO SERVICE (5332), METTUR MAIN ROAD,NATARAJAPURAM BHAVANI,DISTRICT - ERODE,TAMILNADU PIN-638301
PH :04256-9842485670.

CHENGLEPUT

1002.## AMMA AUTOMOBILES (2941), 57-A/1 THIRUKAZHUKUNDRAM ROAD,CHENGALPATTU,(T.N.) PIN-603002
PH :044-27421059/9842375112.

CHENNAI

1003.* EASVARI MOTORS PRIVATE LIMITED (1431), W-110 ANNA NAGAR,CHENNAI PIN-600040
PH :044-9840820212.

1004.** SWAMY AUTOMOBILES (456), 23 CASA MAJOR ROAD,EGMORE,CHENNAI PIN-600008
PH :044-28194815/ 28194135/ 9840891916.

1005.* WHEELS AUTO (469), 40 KASTURIBA NAGAR,1ST CROSS ROAD,ADYAR,CHENNAI PIN-600020
PH :044-24422971/9840138888.

1006.** O.M.S. MOTORS (P) LTD. (2140), NO.27 VELACHERRY MAIN ROAD,RAM NAGAR NORTH,MADIPAKKAM,CHENNAI (TAMIL NADU) PIN-600091
PH :044-2258181581/9444081390.

1007.## EASVARI MOTORS PRIVATE LIMITED (2236), AC-123 4TH AVENUE SHANTHY COLONY,ANNA NAGAR-CHENNAI,CHENNAI,MAHARASHTRA PIN-600040
PH :044-26612837/9840820212.

1008.* P.A. SERVICE STATION (2346), NO. 1 GOVINDARAJ ALUMEL AMMAL NAGAR,NEAR 100 FEET ROAD,AGRAHARAM, KORATTUR,CHENNAI PIN-600076
PH :044-25012075/9840378025.

1009.## KARS KARE SERVICE CENTRE (2579), 648 T.H. ROAD,TONDIARPET,CHENNAI PIN-600081
PH :044-25917671/9841070589.

1010.** MARUTI NEEDS (2531), NO.2 PARK ROAD,PADI,CHENNAI PIN-600050
PH :044-26547104/9940099500.

1011.## AUTO TECH (3445), NO.6 G.S.T. ROAD,KAMATCHI COLONY,SANATORIM,CHENNAI PIN-600040
PH :044-22418315/2238888/22383972/9840375524.

1012.* VAISHALI MOTORS (4529), 4/577 RAJIV STREET,OLD MAHABALIPURAM ROAD,KOTTIVAKAM,CHENNAI PIN-600041
PH :044-24542233//9840138888.

1013.* PERFECT MARUTI CARE (4632), NO. 51/26,4TH MAIN ROAD,RAJA ANNAMALLI PURAM,CHENNAI PIN-600028
PH :044-9789974300/24323328.

1014.** NSK MARUTI (4975), 2/247, AST COAST ROAD,NLANKARAI,CHNNAI,TAMIL NADU PIN-600041
PH :044-24493839/9841047232/9884323652.

1015.## ABIRAMI MOTORS (5131), 6 ANNA NEDUMATHAI,CHOOLABEDU,CHENNAI,TAMILNADU PIN-600094
PH :044-9840017558/23610806.

CHIDAMBARAM

1016.## HI-TECH MARUTI (3231), NO.45, SITHIVEL NAGAR, SALIYANTHOPPU,BYE PASS ROAD,CHIDAMBARAM,DISTRICT-CUDDALORE,TAMILNADU PIN-608001
PH :0444-228589/9585538671/9585538672.

COIMBATORE

1017.## TDK AUTOMOBILES PVT. LTD. (160), 9A NEHRU STREET,B.R. PURAM AVINASI ROAD,PEELAMEDU,COIMBATORE PIN-641004
PH :0422-2577898/2572571/9952300666.

1018.## LOTUS AUTOMOBILES (4758), 1647-A AVINASHI ROAD,HOPE COLLEGE,PEELAMEDU,COIMBATORE (TAMILNADU) PIN-641004
PH :0422-7667710009/9842265133.

1019.* SOUTH INDIA MOTORS (MARUTI) (4752), 9A/3 AVINASHI ROAD,NEAR KMCH POLICE CHECK POST,CIVIL AERODROME POST, SITRA,COIMBATORE (TAMIL NADU) PIN-641014
PH :0422-9843315065, 6560552/2592579.

1020.## GURU AUTO GARAGE (4965), 2/98, IRUGUR ROAD, NEAR BSNL OFFICE,CHINNAMPALAYAM,COMBATOR,TAMIL NADU PIN-600014
PH :0422-9843256247/2625295.

COONOOR

** A-Category Mass : Free & paid Service, Major repairs & Accidental repairs

C-Category Mass : Free & paid Service & Minor repairs

* B-Category Mass : Free & paid Service & Major repairs

D-Category Mass : Free Service & Minor repairs

MARUTI AUTHORISED SERVICE STATIONS (MASS) (AS ON 01.04.2017)

1021.## SHANTHI AUTO CARE (6054), FIGURE OF 8 ROAD,COONOOR,NILGRIS,(TAMIL NADU) PIN-643101
PH :0423-2330652/9443089750.

CUDDALORE

1022.## SUNTAR AUTOS (2134), KTR BUILDINGS,CHIDAMBARAM ROAD,CUDDALORE PIN-607002
PH :04142-223825/9842345690.

CUMBUM

1023.## SRI BALAJI MOTOR WORKS (3139), 221-A 1/3 THENI ROAD,NEAR REGULATED MARKET,UTHAMAPURAM,CUMBUM PIN-625516
PH :04554-2742452/9994169309.

DINDIGUL

1024.* MAGNUM MOTORS (1241), MEENACHINAICKEN PATTY,NH-7 BYE- PASS ROAD,DINDIGUL,(TAMIL NADU) PIN-624002
PH :0451-2432751/2424578/9842120340/9842231340.

ERODE

1025.** SRI KRISHNA AUTOMOBILE ENTERPRISES (2320), 560 CAUVERY ROAD,ERODE PIN-638003
PH :0424-2218010/2218011.

1026.** SRI SAKTHI CARE (1055), NO.21 & 22 (TS-10),POOSARI CHENNIMALAI STREET,(NATIONAL HOSPITAL BACKSIDE),ERODE PIN-638009
PH :0424-2273438/2273110/9842855157.

GADALUR

1027.## GREENWAY MARUTI SERVICE CENTER (5471), KALAMPUZHA,D.O. NO 12/59-3,GUDALUR,DISTRICT - NILGIRLS,TAMILNADU PIN-643001
PH :04262-261699/9443603815.

GOBICHETTYPALAYAM

1028.## HI-TEC AUTO GARAGE (2426), 4/388-A BHARATHI DASAN NAGAR,ERODE MAIN ROAD,KULLAMPALAYAM P.O./1ST VAIKKAL,GOBICHETTYPALAYAM PIN-638476
PH :04285-246636/9842447725.

HOSUR

1029.## AUTO SCAN (2070), 58-B BANGALORE ROAD,HOSUR,(TAMIL NADU) PIN-635109
PH :04344-244371/9363344371.

1030.## SRI VINAYAKA MOTORS (3848), 5/2C/1 (OPP TAMIL NADU HOTEL),BYE PASS ROAD,HOSUR PIN-635109
PH :04344-245036/9443245096.

1031.** BALAJI MOTORS (5136), PLOT NO.11 MARUTHI NAGAR,NEAR T.V.S. AGENCIES (T V S SHOWROOM),KRISHNAGARI MAIN ROAD- HOSUR,TAMILNADU PIN-635109
PH :04344-9842755402/260664.

KALPAKKAM

1032.# MARUTI MOTORS (4253), SURVEY 309/5-A,PUDUPATTINAM VILLAGE PANCHAYAT,THIRUKALUKUNDRAM TALUKA, KANCHEEPURAM,KALPAKKAM PIN-603102
PH :-9443366535, 9842323702.

KANCHEEPURAM

1033.* SVS MARUTI SERVICE CENTRE (5466), NO 46,C KARUKINIL AMARNTHAVAL KOIL STREET.,METTU STREET,OPP. GANESH SAWMILL - KANCHEEPURAM,TAMILNADU PIN-631501
PH :044-9994332290/67277888.

KANGAYAM

1034.## SRI ARUN CAR CARE (3949), COIMBATORE ROAD,NEAR IBP PETROL BUNK,KANGAYAM PIN-638701
PH :04257-9360008642/9443329526.

KARAIKUDI

1035.## SURABI MOTORS (2340), NO.11 TRICHY MAIN ROAD,(NEAR RAILWAY CROSS),SRIRAM NAGAR, KOTAIYUR,KARAIKUDI PIN-630001
PH :04565-286853/9443351484.

KARUMATHAMPATTY

1036.## SIVAN MOTORS (3832), OPP IBP NH47,NEAR KONGU VELLALAR SCHOOL,KARUMATHAMATTY PIN-641659
PH :0421-2336290/ 9842231819.

KARUR

1037.** SRI SAKTHI AUTO CARE (2532), 3/291 COVAI ROAD,VADIVEL NAGAR L.N.S. POST,KARUR,(TAMIL NADU) PIN-639002
PH :04324-227289/9842426585.

KOVILPATTI

1038.## CLASSIC AUTOMOBILES (6037), NO.3/71,NELLAI MAIN ROAD(NH-7),MADURAI,BYE PASS ROAD, INAMANIYACHI,KOVILPATTI,TAMILNADU PIN-628502
PH :04639-9442501479/9442552000.

KRISHNAGIRI

1039.## THIRUTHANIGAI MOTORS (2427), SALEM-CHENNAI BYE PASS ROAD,KRISHNAGIRI,(TAMILNADU) PIN-635001
PH :04343-231532/9842757017.

KUMBAKONAM

1040.## SRI SAKTHI MOTORS (4330), T.S.N 581, 584,DOOR NO. 30, ULLKAM STREET,NEAR OLD BUS STAND,KUMBAKONAM PIN-612001
PH :0435-2403786/ 2431513, 9443131513.

MADURAI

1041.## FRIENDLY MOTORS (3141), 32 PALAM STATION ROAD,NEAR LIC BUS STOP,SELLUR,MADURAI PIN-625002
PH :0452-9842414041/265255.

1042.## SHALOM MOTORS (4629), THENI MAIN ROAD,ACHAMPATHU,NEAR BHARAT PETROLEUM,MADURAI PIN-625019
PH :0452-9442058150/ 9865357772.

MADURANTHAKAM

1043.## MARUTHI MOTORS (6036), NO.33,G.S.T. ROAD,KARUNGUZHI,MADURANTHAKAM,DISTRICT-KANCHIPURAM,TAMILNADU PIN-603303
PH :0427-9443354073.

MAYILADUTHURAI

1044.## R.M.S. MARUTI AUTO (2237), 53/54 MAHADHANA STREET,MAYILADUTHURAI,(TAMIL NADU) PIN-609001
PH :0364-222685/9842922665.

NAGAPATTINAM

1045.* MARUTI-TECH (1671), RAJATHI COMPLEX,OPP. TNEB BIKARA,TIRUVARUR ROAD,NAGAPATTINAM PIN-611001
PH :04365-9842653718/9942409032.

NAGARCOIL

1046.* SRI GANAPATHI MOTORS (1629), NO.12 JAWAHAR STREET,R.V. PURAM,NAGERCOIL,NAGERCOIL PIN-629001
PH :04652-233970/233980/9344695657.

NAMAKKAL

1047.## ARUNA MOTORS (1461), MARUTI SERVICE CENTRE,OPP. N.S.R. BUILDING,SALEM MAIN ROAD,NAMAKKAL PIN-637001
PH :04281-275761/9842775761.

NEYVELI

1048.## SRI MARUTHI MOTOR SERVICE (1458), 8-A DAILY BAZAR,BLOCK-19,NEYVELI PIN-607803
PH :04142-324253/9443203191.

PALLADAM

1049.# CHENDU MOTORS (4333), KALIVELAMPATTI PIRIVU,TRICHY ROAD,PALLADAM,COIMBATORE DIST PIN-641662
PH :04255-255805, 9842225058.

PALLAVARAM

1050.* VBK MOTORS (4463), OLD NO. 99, NEW NO. 91,G.S.T ROAD, ALVITONE ESTATE,(BEHIND LAKSHMI THEATRE),PALLAVARAM, CHENNAI PIN-600043
PH :044-42326210/20/30, 9841425030.

PARAMAKUDI

1051.# SIVA AUTOMOBILES (4542), NEAR SRIKUMARA SUBRAMANIYA SWAMY TEMPLE,OPP FIRE STATION,MADURAI RAMESWARAM ROAD,PARAMAKUDI, RAMNAD DIST PIN-623707
PH :04564-9944258794/231253.

PARAMATHIVELUR

1052.## RADHA CAR CARE (5828), NO 96/1,BYE PASS ROAD,VETTUKATTU PUDAR,PIRIVUR ROAD,PARAMATHIVELUR-638182,DISTRICT-NAMAKKAL,TAMILNADU PIN-638182
PH :04268-220009/9600499600.

PERUNDURAI

1053.## PRIYAM AUTOMOBILES (3036), 139 KOVAI MAIN ROAD,PERUNDURAI,(TAMIL NADU) PIN-638052
PH :04294-9842744944/9842756006.

POLACHI

1054.* J D & COMPANY (6055), COIMBATORE ROAD,POLLACHI PIN-642002
PH :04259-220262/223828/9443172635.

RAJAPALYAM

1055.## RAJA MOTORS (4128), 3 MADURAI,BY-PASS ROAD,NEAR JANAKI RAM TEXTILES,RAJAPALAYAM PIN-626117
PH :04563-9976606021.

RASIPURAM

1056.## ROYAL AUTO CARS (4052), 5/120 NH-7, SALEM MAIN ROAD,NEAR TSTC DEPOT, MUTHUKALIPATTI POST,RASIPURAM TALUK,NAMAKKAL DISTRICT PIN-637408
PH :04287-9443230339.

RED HILLS

** A-Category Mass : Free & paid Service, Major repairs & Accidental repairs

C-Category Mass : Free & paid Service & Minor repairs

* B-Category Mass : Free & paid Service & Major repairs

D-Category Mass : Free Service & Minor repairs

1057.## UNIQUE CAR CARE (5868), NO.54,FIRST STREET,MANIKANDAPURAM,RED HILLS-THIRUVALLUR HIGHWAY,RED HILLS,TAMILNADU PIN-600062
PH :044-26373939/9841059295.

SALEM

1058.## MEENATCHI AUTO (2940), 57 KALARAMPATTY MAIN ROAD,(NEAR DEVI THEATRE),SALEM,(T.N.) PIN-636015
PH :0427-9443201001/2254426.

1059.** NATSUN MOTORS (6029), NO.220,BANGALORE BYE PASS ROAD (NH-7),KODALAMPATTY, SALEM,DISTRICT-SALEM,TAMILNADU PIN-636010
PH :0427-9842704499/9942104477.

SANKAGIRI

1060.## TECH ZONE AUTO SERVICE (2640), 10/78 BHAVANI MAIN ROAD,(NEAR ERODE PIRIVU),SANKAGIRI SALEM DISTT. PIN-637303
PH :04283-244523/9842709103.

SANKARANKOIL

1061.## RAJA MOTORS (4555), RALAPALAYAM ROAD,OPPOSITE TO LIC BUILDING,SANKARANKOIL PIN-627756
PH :04633-9994409363.

SATHYAMANGALAM

1062.## CAR ZONE AUTO SERVICE (5762), NEAR RTO OFFICE-COIMBATORE MAIN ROAD-,SATHYAMANGALAM,DISTRICT-ERODE,TAMILNADU PIN-638402
PH :04295-9842286801.

THANJAVUR

1063.## R K P MOTORS (5238), 121/7.THANJAVUR KUMBAKONAM,HIGHWAY PALLIAGRAHARAM,THANJAVUR,TAMILNADU PIN-613003
PH :04362-9976725555.

THENI

1064.## SATHURAGIRI MOTOR WORKS (1650), 3-1-31 TO 36,CUMBUM ROAD,THENI,(TAMIL NADU) PIN-625531
PH :04546-264663/9047011678/9047033678.

THENKASI

1065.## CARE ZONE (3766), 5/164(1) KUTHUKKAL VALASAI,MADURAI ROAD,TENKASI,(TAMIL NADU) PIN-627811
PH :04633-9842133134/280803.

TIRUCHENDUR

1066.* CLASSIS AUTOMOBILES (4355), 269/2,V.K.N NAGAR,PALAYAMKOTTAI ROAD,TIRUCHENDUR PIN-628215
PH :04639-246043/246043/9442246043.

TIRUNELVELI

1067.## FRIENDS INDIA AUTO CLINIC (5030), NO.16 D.BYE PASS ROAD,VANNARAPETAI,TIRUNELVELI,TAMILNADU PIN-627003
PH :0462-2501238/9843006111.

TIRUPUR

1068.** LAKSHMI MOTORZ (2461), 4/146 PALLADAM ROAD,OPP. LAKSHMI KALYANA MANDAPAM,TIRUPUR,(T.N.) PIN-641604
PH :0421-2215959/2214799/9842233959.

TRICHY

1069.* VYTHES MOBILE PARK (443), 8/6 TANJORE ROAD,THIRUCHIRAPALLI PIN-620008
PH :0431-2200716/2200718/9443152529.

UDAMALAPET

1070.* S.R.K. MOTORS (1456), C-109 GANDHI NAGAR,UDAMALAPET,COIMBATORE (DT.),(TAMIL NADU) PIN-642154
PH :04252-232805/229019/9843011520.

VELLORE

1071.* MARUTI AUTO SERVICE (2844), 106 (OLD NO.: 78),KATPADI ROAD,GANDHI NAGAR,VELLORE (T.N.) PIN-632006
PH :0416-2243422/2245222/9994832099/9843093422.

VILLUPURAM

1072.## RAGAVENDRA MOTORS (2361), 2/3 MADRAS TRUNK ROAD,VILLUPURAM,(TAMIL NADU) PIN-605602
PH :-9244555860/864/862.

VRIDDHACHALAM

1073.# VISHWA MARUTI CARE CENTER (5463), NO412,PERIYAR NAGAR (NEAR FIRE SERVICE STATION),VRIDDHACHALAM,DISTRICT - CUDDALORE,(TAMILNADU) PIN-606001
PH :04143-9842246092/238095.

TRIPURA

AMBASSA

1074.## CHAKRABORTY MECHANICAL WORKSHOP (5351), NH-44. NEAR ZILLA PARISWAD OFFICE,AMBASSA,DISTRICT - DHALAI,TRIPURA PIN-799289
PH :-9436136054.

BELONIA

1075.## JOY UDYOG (3977), KALINAGAR,BELONIA,SOUTH TRIPURA PIN-799155
PH :03823-9436799415/9774805210.

DHARMANAGAR

1076.## RAJ AUTOMOBILES (2868), STATION ROAD,RAJABARI,DHARMANAGAR,TRIPURA (NORTH) PIN-799253
PH :03822-234670/9436477578.

UDAIPUR (WEST)

1077.## RAMKRISHNA MARUTI ENGINEERING (4865), RAJARBAGH MOTOR STAND,UDAIPUR WEST,DISTRICT-TRIPURA SOUTH PIN-799120
PH :-9436135422.

UDAYPUR

1078.## SUR UDYOG (3963), TOWN FULKUMARI NO. 1,BRAMHABARI, P O UDAIPUR COURT,UDAYPUR,TRIPURA SOUTH PIN-799001
PH :03821-9862276650.

UTTAR PRADESH

AGRA

1079.## GAYATRI MOTORS (4730), 101-102, SHASHI NAGAR, CHANDRAKALA-,COMPLEX SIKANDRA BODLA ROAD,AGRA,(UTTAR PRADESH) PIN-282008
PH :-9319129910.

1080.** RAJPUT MOTORS (5166), 44/320 B.MAUZA BODLA, AGRA,DISTRICT - AGRA,UTTAR PRADESH PIN-282007
PH :-9319185751/9319108310.

ALIGARH

1081.## KAPIL AUTOMOBILES (1344), OLD KHURJA BUS STAND,G.T. ROAD,ALIGARH(U.P.) PIN-202001
PH :-9837007636.

1082.## KAR SCAN CENTRE (449), RAMGHAT ROAD,KWARSI,ALIGARH PIN-202002
PH :0571-9927001133/3292217.

ALLAHABAD

1083.## ANSHUMAN AUTOMOBILES (4933), 353, NAINI BAZAR NAINI,DISTRICT ALLAHABAD,ALLAHABAD,UTTAR PRADESH PIN-211008
PH :0532-9335138119/2696474.

1084.** KAY CEE AUTOMOBILES (2155), 72/60 L.B. SHASTRI MARG,ALLAHABAD PIN-211006
PH :0532-2420225/2420434.

1085.## TRIBENI MOTORS (2539), 23 KANPUR ROAD,ALLAHABAD,(U.P.) PIN-211001
PH :0532-2624699.

ALMORA

1086.## AROMA AUTOMOBILES (3149), THE MALL,ALMORA,(UTTARANCHAL) PIN-263001
PH :05962-33081/33432.

AMROHA

1087.## SUNNY MOTORS (2165), BIJNORE ROAD,J.P. NAGAR,AMROHA,(U.P.) PIN-244221
PH :-51111.

AURAIYA

1088.## VINAYAK AUTOMOBILES (2842), OPP. NTPC COLONY IIND GATE,PHAPHUND ROAD,DIBIYAPUR,AURAIYA (U.P.) PIN-206244
PH :05683-283639.

1089.** SINGH AUTOMOBILES (5248), KANPUR ROAD, AURAIYA,DISTRICT - AURAIYA,UTTAR PRADSH PIN-206122
PH :05683-941228402/245428.

AZAMGARH

1090.## BHAGIRATHI MOTORS (4674), SARFUDDINPUR,P.O. SADAR,AZAMGARH,UTTAR PRADESH PIN-276001
PH :05462-9450029647/243702.

BABUGARH

1091.* GURUNANAK AUTOMOBILES (5977), NH-24, NR. TOLL PLAZA, BABUGARH,VILL SIMROLI, GHAZIABAD,DISTRICT-GHAZIABAD,UTTAR PRADESH PIN-245101
PH :-9971792397.

BAGHPAT

1092.# KAUSHIK MOTORS (4473), DELHI ROAD,BAGHPAT,UTTAR PRADESH PIN-250609
PH :0121-9412410412, 9837800582, 9411263023.

BALRAMPUR

1093.## D M AUTOMOBILES (3933), NEAR BCM, POST SIRSIYA,GONDA ROAD,BALRAMPUR PIN-271201
PH :05263-9415071840/235782.

BANDA

1094.## CHAUDHARY TRACTORS (2249), STATION ROAD,BANDA,(U.P.) PIN-210001
PH :05192-224882/224202.

BARAUT

** A-Category Mass : Free & paid Service, Major repairs & Accidental repairs

C-Category Mass : Free & paid Service & Minor repairs

* B-Category Mass : Free & paid Service & Major repairs

D-Category Mass : Free Service & Minor repairs

1095.## HIGH TECH ENGINEERS (4821), 216/5 SAHARANPUR ROAD,BARAUT PIN-250611 PH :01234-263327/941220547/983716887.

1096.## SIGNET AUTOMOBILES (4441), NEAR INDUSTRIAL POLICE CHOWKI,DELHI ROAD,BARAUT,DISTT BAGHPAT (U.P) PIN-250611 PH :01234-267164/9412831171/98411833140.

BAREILLY

1097.** SAVVY MOTORS (4559), BALWANT MOTORS BUILDING,131 CIVIL LINES,NEAR DAINIK JAGRAN,BAREILLY (UTTAR PRADESH) PIN-243001 PH :0581-2420907/ 2420143.

1098.## S P MOTORS (5746), 383, SURKHA CHAWNI, NAINITAL ROAD,BAREILLY,DISTRICT-BAREILY,UTTAR PRADESH PIN-243001 PH :0581-09412479140/2412829.

BIJNOR

1099.## SARDAR MOTORS (4671), DELHI HIGHWAY ROAD,4TH KM MILE STONE,BIJNOR,UTTAR PRADESH PIN-246701 PH :01342-9837265076/262410.

BULANDSHAHR (U.P.)

1100.## DELHI AUTO ENGRS (1351), NEAR PANDIT PETROL PUMP,BHOOR,G.T.ROAD,BULANDSHAHR PIN-203001 PH :05732-234888/9359155333.

CHANDPUR (U.P.)

1101.## BHARTI AUTOMOBILES (1777), DHANORA ROAD,CHANDPUR,DISTT. BIJNOR,(U.P.) PIN-246725 PH :01345-221441/9837380551.

CHITRAKOOT

1102.* SHYAM MOTORS (4367), BUS STAND,KARWI,CHITRAKOOT PIN-210205 PH :05198-236996, 235150, 9415143900.

DADRI

1103.## NATIONAL MOTOR AGENCY (5143), NOIDA ROAD,DADRI,DISTRICT - GAUTAMBUDH NAGAR,UTTAR PRADESH PIN-203207 PH :0120-9818486888/2667033.

DANKAUR

1104.## YASH MOTORS (5934), SIKANDRABAD ROAD, NEAR KISAN INTER COLLEGE,DANKAUR,DISTRICT- GAUTAM BUDH NAGAR,UTTAR PRADESH PIN-203201 PH :-9410491590.

DEOBAND

1105.## PRACHI MOTORS (3361), ADJACENT TO CIVIL COURTS,G.T. ROAD,DEOBAND,DISTT. SAHARANPUR (U.P.) PIN-247554 PH :01336-22900/9359246585.

DEORIA

1106.** CLASSIC MOTORS (2971), D-13/14 INDUSTRIAL ESTATE,OPPOSITE RTO OFFICE,GORAKHPUR ROAD,DEORIA (U.P.) PIN-274001 PH :-9415080981.

DHAMPUR

1107.## AUTAR AUTOMOBILES (4846), NOORPUR ROAD,DHAMPUR,DISTRICT-BIJNOR,UTTAR PRADESH PIN-246761 PH :01344-220440, 230074, 9411833140,9897073113.

FAIZABAD

1108.* S K MOTORS (4672), CHANDPUR HARBANS ALLAHABAD ROAD,NH-96,FAIZABAD,UTTAR PRADESH PIN-224001 PH :-9335981364/9335305129.

FARUKHABAD

1109.## SANDEEP MOTORS (4161), THANDI SADAK,OPP. JITENDRA GAS GODOWN,FARUKHABAD,UTTAR PRADESH PIN-209625 PH :05692-228321/228205/9838840322-321.

1110.## APOORVA MOTORS (4675), SATAPUR MAINDIR ROAD,FARRUKHABAD,DISTRICT FARRUKHABAD,UTTAR PRADESH PIN-209625 PH :-9451880650/9336051151.

FATEHPUR SIKRI

1111.## LAXMI MOTORS (5943), FATEHPUR SIKRI ROAD, KHEDA KORAI,FATEHPUR SIKRI,DISTRICT-AGRA,UTTAR PRADESH PIN-283110 PH :-9837749949.

FIROZABAD

1112.## GOVIND AUTOMOBILES (1739), OPP. IMPERIAL GLASS SHOWROOM,S.N. ROAD,FIROZABAD,(U.P.) PIN-283 203 PH :05612-244650.

1113.** AMAN MOTORS (4366), OPP CAR CARE (INDIA),BYE PASS ROAD,FIROZABAD,UTTAR PRADESH PIN-283203 PH :05612-281546/9219400877.

GANGOH

1114.# SHRI KRISHNA MOORS (5939), BYE PASS ROAD RAM GARH, GANGOH,DISTRICT-SAHARANPUR,UTTAR PRADESH PIN-247341 PH :-9719471747.

GHAZIABAD

1115.* D.N. AUTOLAND (272), E-4 MEERUT ROAD,INDUSTRIAL AREA,(NEAR OLD MEERUT CHUNGI),GHAZIABAD PIN-201001 PH :0120-6521037/2724316/9810140000.

1116.* CHAWLA AUTOMOBILES (2643), 67 AMBEDKAR ROAD,OPP. NEHRU YUVA KENDRA,GHAZIABAD PIN-201003 PH :0120-2797021/9811720929/9810663366.

1117.* SHIVA MOTORS (3343), 17TH KM STONE,118-119 SHIVPURI,SECTOR-9 VIJAY NAGAR BYEPASS NH-24,GHAZIABAD (U.P.) PIN-201009 PH :-2744400/3232590/9891464349.

1118.** KRISHNA AUTOMOBILES (5356), 101 LAL KUAN SHIV MANDIR,BULANDSHAHAR ROAD,DISTRICT - GHAZIABAD,UTTAR PRADESH PIN-201001 PH :-9810311475/9999506820.

1119.## S P MOTORS (4973), HAPUR BYPASS ROAD,MEHRAULI,GHAZIABAD PIN-201001 PH :0120-9350936262/2824443.

GONDA

1120.* PANKAJ AUTOMOBILES (1370), C/O NEW DELHI MOTOR WORKS,BARAICH ROAD,GONDA PIN-271001 PH :05262-232812.

1121.** AMAN MOTORS (3858), PORTER GANJ,LUCKNOW ROAD,GONDA PIN-271001 PH :05262-231506.

GREATER NOIDA

1122.## JAISWAL MOTORS (5078), PLOT NO. 31,SECTOR MUP-II GREATER NOIDA,DISTRICT - GAUTAM BUDH NAGAR,UTTARPRADESH PIN-201308 PH :-9810062269/6485444/9212142269.

1123.## KUMAR MOTORS (5343), M-8 SITE 5 UP SIDE, SURAJPUR, INDUSTRIAL AREA,GREATER NOIDA,DISTRICT-GOUTAM BUDH NAGAR,UTTAR PRADESH PIN-201306 PH :0120-9911498777/2341088/9811498333.

HAPUR

1124.* SRASTHI MOTORS (3076), NEAR UNITED BANK OF INDIA,DELHI ROAD,HAPUR,(U.P.) PIN-245101 PH :950122-2305842/ 9412221608.

HARDOI

1125.## M. MOTORS & SERVICE CENTRE (3371), CHAND BEHTA,LUCKNOW ROAD,HARDOI,(U.P.) PIN-241001 PH :05852-21734.

1126.** TAYAL AUTOMOTIVES (4265), SOHRA KOTHI,BAWAN CHUNGI,HARDOI PIN-241001 PH :05852-234314, 9415149951.

HATHRAS

1127.## RADHEY RADHEY AUTOMOBILES (4344), NEAR BUS STAND,AGRA ROAD,HATHRAS PIN-204101 PH :-9897069159.

JAGDISHPUR (U.P.)

1128.## SUPER AUTOMOBILES (3564), JAFARGANJ P.O.,INDUSTRIAL AREA,JAGDISHPUR,DISTT. SULTANPUR (U.P.) PIN-227817 PH :05361-291168/9415177882.

JAUNPUR

1129.## SADGURU MOTORS (5071), FAIZBAGH (NEAR TOM OFFICE),UMARPUR JAUNPUR,,JAUNPUR,UTTAR PRADESH PIN-222142 PH :-9839318653.

JHANSI

1130.* A.B. MOTORS (6022), 4 KHATTERYANA,JHANSI PIN-273162 PH :0510-2471865.

1131.## JALIM PAINTER (5661), 1051, NEAR ADINATH HOTEL, STATION ROAD,JHANSI,DISTRICT - JHANSI,UTTAR PRADESH PIN-284001 PH :-9415113566.

KANNAUJ

1132.## SARALA AUTO CARE (5854), G.T. ROAD, KANNAUJ,DISTRICT-KANNAUJ,UTTAR PRADESH PIN-209720 PH :-9415167503.

KANPUR

1133.## KANPUR AUTO CENTRE (2823), 14/142,CHUNNIGANJ,KANPUR PIN-208012 PH :0512-2533160.

1134.* AJAY MOTOR WORKS PVT. LTD. (3134), 117/N/81 KAKADEVO,KANPUR PIN-208001 PH :0512-2501044.

1135.** EXCELLENT MOTORS (2968), 123/793 FAZALGANJ,KANPUR PIN-208012 PH :0512-2235566.

1136.** AUTO GARAGE (4266), P-22-A,PRATAP GANJ, FACTORY AREA,OPP GANDA NALA,KANPUR PIN-208012 PH :0512-2236763.

** A-Category Mass : Free & paid Service, Major repairs & Accidental repairs

C-Category Mass : Free & paid Service & Minor repairs

* B-Category Mass : Free & paid Service & Major repairs

D-Category Mass : Free Service & Minor repairs

1137.** SUJIPA MOTORS (4337), 127/465,U-BLOCK,NIRALA NAGAR,KANPUR PIN-208014
PH :0512-2643146/ 2618156.

1138.** CHANDRA MOTORS (4458), 621/3 W-2 JUHI,BEHIND SACHAN GUEST HOUSE,KANPUR PIN-208014
PH :0512-3258159.

KHAIRABAD

1139.* BAIG MOTORS PVT LTD (4165), KHAIRABAD,LUCKNOW ROAD,SITAPUR,UTTAR PRADESH PIN-261001
PH :-9307237710.

KHALILABAD

1140.## RATAN MOTORS (5645), RAILWAY STATION ROAD - KHALILABAD,DISTRICT- SANT KABIR NAGAR,UTTAR PRADESH PIN-272175
PH :-9415257705.

KHATAULI

1141.## EAGLE MOTORS (5142), OPPOSITE EW ROADWAYS,G.T. ROAD. NH -58 KHATAULI,DISTRICT - MUZAFFARNAGAR,UTTAR PRADESH PIN-251201
PH :01396-9997039786/9897223327/273501.

KHEKRA

1142.** KAILASAH MOTORS (5767), OPP TEHSIL ,DELHI BAGHPAT ROAD,KHEKRA,DISTRICT-BAGHPAT,UTTAR PRADESH PIN-201101
PH :0121-2232903.

KOSIKALAN

1143.** ADITYA MOTORS (1940), IOC PUMP,NATIONAL HIGHWAY,KOSIKALAN,(U.P.) PIN-281001
PH :05662-232657/9837050778.

LAKHIMPUR KHERI

1144.** AJMANI TRACTORS (4143), NIGHASAN ROAD,LAKHIMPUR KHERI,UTTER PRADESH PIN-242001
PH :05872-266340.

LALITPUR

1145.## VARDHMAN MOTORS (1073), SAGAR ROAD,LALITPUR,(U.P.) PIN-284403
PH :05176-277996.

LAMBHUA BAZAR

1146.## VIKRAM MOTORS (3729), LAMBHUA BAZAR,SULTANPUR (DIST.),UTTAR PRADESH PIN-222302
PH :05364-257380.

LONI

1147.## SAMBHAV AUTOMOBILES (5168), 31.RURAL INDUSTRIAL ESTATE,ARYA NAGAR INDUSTRIAL AREA,MAIN DELHI SHAHRANPUR HIGHWAY,UTTAR PRADESH PIN-201102
PH :-9311690878.

LUCKNOW

1148.## BALAJI MOTORS (1336), 1 NEWAL KISHORE ROAD,LUCKNOW (U.P) PIN-226001
PH :0522-3956801.

1149.** KALYAN MOTORS (1161), GOVT. POLYTECHNIC CROSSING,FAIZABAD ROAD,GOMTI NAGAR,LUCKNOW PIN-226001
PH :0522-4049545-47.

1150.** RELIANCE MOTORS CARE (1236), 7-B/1 PRIME PALACE,FAIZABAD ROAD,INDIRA NAGAR,LUCKNOW PIN-226016
PH :0522-2340366.

1151.** GUD'S CAR CARE (2538), MAIN ROAD,NISHATGANJ,LUCKNOW PIN-226 006
PH :0522-2330786/87.

1152.** B.K. MOTORS (2537), KALYANPUR,RING ROAD,OPP. CARRIER CONVENT BOARD,LUCKNOW PIN-226015
PH :0522-2760111.

1153.* S.K. MOTORS (2449), 8/881 VIKAS NAGAR,PICNIC SPOT ROAD,KHURAM NAGAR,LUCKNOW PIN-226013
PH :0522-2324809.

1154.* V.S. MOTORS (4745), RAMADHIN SINGH INTER COLLEGE CAMPUS,BABU GANJ,LUCKNOW,UTTAR PRADESH PIN-226007
PH :0522-9839522310/2788564.

1155.* KRISHNA MOTORS (5026), BALAGANJ HARDOI ROAD,CHOWK LUCKNOW,DISTRICT LUCKNOW,UTTAR PRADESH PIN-226003
PH :-9839177777.

1156.** KAPOOR MOTORS (5044), 555/GA/50,BARA BIRWA, KANPUR ROAD-,ALAMBAGH LUCKNOW,DISTRICT - LUCKNOW,(UTTAR PRADESH) PIN-226005
PH :-9415080432.

1157.## GALAXY MOTORS (5274), KASHANA SITAPUR ROAD, NEAR SHIA,P G COLLGEG - LUCKNOW,DISTRICT - LUCKNOW,UTTAR PRADESH PIN-226001
PH :-9305567878.

1158.** MVV MOTORS (5531), A1/14, VIJAY KHAND, GOMTI NAGAR,LUCKNOW,DISTRICT - LUCKNOW,UTTAR PRADESH PIN-226010
PH :0522-3247776.

1159.* THE GARAGE (5479), BEHIND NEW HANUMAN MANDIR, MADIR PARK,MAHANAGAR - LUCKNOW,DISTRICT - LUCKNOW,UTTAR PRADESH PIN-226017
PH :-9236711634.

1160.** KAPOOR MOTORS (1751), PLOT NO.380,NEAR GUNGA BAHARA SCHOOL,TILAK NAGAR,UTTAR PRADESH PIN-226004
PH :-252704.

MAHOBA

1161.## ROYAL SERVICE STATION (2238), HAMIRPUR CHUNGHI,KANPUR ROAD,MAHOBA,(U.P.) PIN-210427
PH :05281-256194/252194.

MAINPURI

1162.# JATIN MOTORS (5540), GANESH MILL COLONY. RADHA RAMAN ROAD,MAINPURI,DISTRICT-MAINPURI,UTTAR PRADESH PIN-205001
PH :-9359843400.

MARIAHU

1163.## BABU MOTORS (5740), MACHALISHAHAR ROAD, NEAR POST OFFICE,MARIAHU,DISTRICT - JAUNPUR,UTTAR PRADESH PIN-222161
PH :-9919263663.

MATHURA

1164.## GIRIRAJ CAR CARE (5624), BIMAL ENGG COMPLEX,BAD,MATHURA PIN-281006
PH :0565-2430821.

1165.* SIYA RAM MOTORS (1666), JAYSINGHPURA,NEAR BIRLA MANDIR,MATHURA,(U.P.) PIN-281003
PH :0565-2530210.

1166.** NAND SERVICE STATION (3578), GOPAL PURA VILLAGE,REFINDERY TOWNSHIP,NH-2,MATHURA PIN-281006
PH :0565-5416912.

1167.## SHREE GOPAL AUTOMOBILES (5664), DELHI BYE PASS ROAD, NEAR GOKUL RESTAURANT,MATHURA,DISTRICT - MATHURA,UTTAR PRADESH PIN-281001
PH :0562-9760026760.

MEERUT

1168.## SARAN AUTOMOBILES LTD. (1078), DELHI ROAD,RITHANI,MEERUT PIN-250103
PH :0121-2441986/3253074/93594506555.

1169.** EXPERT CAR SCANNER (1174), 83 HILL STREET (KATH-KA-PUL),BEHIND ABU LANE,MEERUT CANTT.,(U.P.) PIN-245206
PH :0121-2644860/9412201195.

1170.## KRISHNA AUTOMOBILES (5573), PLOT NO D-10, SHRADHA PURI,KANKARKHERA - MEERUT,DISTRICT - MEERUTI,UTTAR PRADESH PIN-250001
PH :-9927241738.

MIRZAPUR

1171.## PRABHAT MOTORS (4131), NH-7 REWA ROAD,CHANDAIPUR LAKHAMPUR,MIRZAPUR,(U.P.) PIN-231001
PH :05442-245859.

MOHANLAL GANJ

1172.** GURU TEG BAHADUR AUTO ENTERPRISES (4072), 4 SENANI VIHAR,RAI BAREILLY ROAD,MOHANLAL GANJ,LUCKNOW (U.P.) PIN-226001
PH :0522-2442061.

MORADABAD

1173.## ASHISH AUTOMOBILES (1477), KANTH ROAD,MORADABAD,MORADABAD PIN-244001
PH :0591-6533559.

MUZAFFARNAGAR

1174.## SIDDIQUI MOTOR WORKS (1339), ANSARI ROAD,MUZAFFARNAGAR (U.P) PIN-251001
PH :031-2442626/9412476786.

NAJIBABAD

1175.## SETHI MOTORS (4557), C/O SETHI BOARD INDUSTRIES LIMITED,OPP. HINDUSTAN COCO-COLA BOTTLING PLANT,NAGINA ROAD, NAJIBABAD,DISTT. BIJNOR (UTTAR PRADESH) PIN-246763
PH :01341-220087, 9837349688, 9837590800.

NOIDA

1176.## AUTO POINT (2263), C-107 SECTOR-2,NOIDA,(U.P.) PIN-201301
PH :0120-9810061814/9910397875.

1177.* CITY MOTORS (3876), C-2 SECTOR 63,NOIDA PIN-201307
PH :-2401772/9810427752.

1178.** RAHUL MOTORS (4662), A-59 SECTOR-80,PHASE-II,NOIDA,UTTAR PRADESH PIN-201303
PH :0120-9810572900/9312271259/3963138.

1179.** RAJESH & ANIL MOTOR CO (5330), B-110. SECTOR 2,NOIDA,DISTRICT - GAUTAM BUDH NAGAR,UTTAR PRADESH PIN-201304
PH :0120-9818578786/4211266/2539555.

** A-Category Mass : Free & paid Service, Major repairs & Accidental repairs

C-Category Mass : Free & paid Service & Minor repairs

* B-Category Mass : Free & paid Service & Major repairs

D-Category Mass : Free Service & Minor repairs

MARUTI AUTHORISED SERVICE STATIONS (MASS) (AS ON 01.04.2017)

1180.## NANDA MOTORS (5733), B-180,PHASE-2,NOIDA,DISTRICT-NOIDA,UTTAR PRADESH PIN-201305 PH :-9566003839.

OBRA

1181.## APPRECIATE SERVICES (4678), BY PASS ROAD,ROBERTS GANJ,DISTRICT - SONEBHADRA,UTTAR PRADESH PIN-231216 PH :05445-267266/9415323710.

PHULPUR

1182.## BHARAT MOTORS (6039), C/O KAUSHLENDRA PANDEY, PUREMABHARATG,PRATAPPUR ROAD,PHULPUR,DISTRICT-ALLAHABAD,UTTAR PRADESH PIN-244601 PH :-09554495877.

PILIBHIT

1183.* UNIVERSAL MARUTI SERVICE STATION (4365), BYE PASS ROAD,PILIBHIT,UTTAR PRADESH PIN-262001 PH :05882-255499/ 9412313499.

PILKHUWA

1184.* SHREE BANKEY BIHARI MOTORS PVT. LTD. (6025), NH-24, DELHI-GARH ROAD,PILKHUWA,DISTRICT-GHAZIABAD,UTTAR PRADESH PIN-245307 PH :-9045548101.

PRATAPGARH

1185.** SHREE MOTORS (4146), ALLAHABAD FAIZABAD ROAD,NH-96,CHILBILA RANJEETPUR,PRATAPGARH (UTTAR PRADESH) PIN-2300001 PH :05342-236057/ 9415229257.

RAI-BARELI

1186.** STANDARD GARAGE (4429), MANIKA CENEMA ROAD,NEAR INSPECTION HOUSE,RAE BAREILLY PIN-229001 PH :0535-2701320.

RAMNAGAR

1187.## MAHI AUTOMOBILES (5532), SHANKARPUR RAMNAGAR,DISTRICT - NAINITAL,UTTRAKHAND PIN-244715 PH :05947-254740.

RAMPUR (U.P)

1188.## FIZZA MOTORS (2241), NEAR AMBEDKAR PARK,CIVIL LINES,RAMPUR (U.P.) PIN-244901 PH :0595-2355009.

RATH

1189.## MARUTI POINT (4228), ROOP NAGAR, BUDHOLIYANA,NEAR BUS STAND, ORAI ROAD,RATH,DIST. HAMIRPUR (U.P) PIN-210431 PH :05280-202427/9415331721.

RENUKUT

1190.## AMBIKA MOTORS (1050), PATEL NAGAR,MURDHAWA,RENUKUT,SONBHADRA (U.P.) PIN-231217 PH :05446-252238.

RIHAND NAGAR

1191.## OUDH MOTORS (4421), RIHAND NAGAR,SONEBHADHRA,(U.P.) PIN-231223 PH :05446-232321/ 9415230855.

ROBERTSGANJ

1192.* KAMAKHYA AUTOMOBILES (4163), PIPRI ROAD,ROBERTSGANJ,SONEBHADRA (U.P) PIN-231216 PH :05444-223022/9415342706.

SADABAD

1193.## ASHU SERVICE CENTRE (5849), AGRA BYE PASS R0AD,SADABAD,DISTRICT-HATHRAS,UTTAR PRADESH PIN-281306 PH :-09759594110.

SAHARANPUR

1194.## GANESH CAR SERVICES (1871), OPP. REMOUNT DEPOT GATE,DEHRADUN ROAD,SAHARANPUR PIN-247001 PH :0132-26626711/2613997/9358306804.

SAHIBABAD

1195.** SANSAR MOTORS PVT. LTD. (2061), 11/27 SECTOR-3,RAJINDER NAGAR,SAHIBABAD,DISTT. GHAZIABAD PIN-201005 PH :0120-4109879/4109880.

1196.## POOJA MOTORS (3562), TEELA MORE,SHAHBAJPUR,LONI,DISTT. GHAZIABAD (U.P.) PIN-201010 PH :0120-9810986463.

1197.## MEHAR AUTOMOBILES (3576), 116/1 NEAR GDA MARKET,G.T. ROAD,KATORI MILL MOHAN NAGAR,GHAZIABAD PIN-201007 PH :-9711201557/9871832662.

1198.** MOTOR MAGIC AUTO ZONE (4462), 4/29-A SITE-IV,INDUSTRIAL AREA,SAHIBABAD,DISTT. GHAZIABAD PIN-201007 PH :0120-4163108/4163109.

1199.** PANDIT AUTOMOBILES (4647), 3/1/1 SITE-IV, INDUSTRIAL AREA,SAHIBABAD,OPP. KAUSHAMBI, GHAZIABAD,(UTTAR PRADESH) PIN-201005 PH :0120-2776808/ 4114808.

SANDILA

1200.## SUBHAM SERVICE CENTRE (4042), NEAR NEHA KOTHI ROAD,SANDILA,HARDOI PIN-241204 PH :05854-270443.

SHAHJAHANPUR

1201.## SUPER AUTO (3135), OLD DIST. HOSPITAL ROAD,SHAHJAHANPUR (U.P.) PIN-242001 PH :05842-223545.

SHAMLI

1202.## ROYAL MOTORS (5277), PANIPAT KARANA ROAD,SHAMLI,SHAMLI,UTTAR PRADESH PIN-247776 PH :-9837138064/61.

SHIKOHABAD

1203.## KUMAR MOTORS (5575), SUBHASH TIRAHA, AGRA GATE - SIKOHABAD,DISTRICT - FEROZABAD,UTTAR PRADESH PIN-205135 PH :-9411937033.

SIDDHARTH NAGAR

1204.## MARUTI CARE CENTRE (2736), OPP. SIDDHARTH SCHOOL,AZAD NAGAR,SIDDHARTH NAGAR,(U.P.) PIN-272207 PH :05544-22090.

SIKANDRABAD

1205.## NALIN AUTOS (1725), G.T. ROAD,SIKANDRABAD,DISTT. BULANDSHAHAR,(U.P.) PIN-203205 PH :05735-222802/9412227155.

SIRSAGANJ

1206.## SATGURU MOTORS (3739), BYE PASS KAURARA ROAD,SIRSAGANJ DISTT. FIROZABAD,ETAWAH-AGRA ROAD,SIRSAGANJ (U.P.) PIN-205130 PH :05676-22563.

SONEBHADRA

1207.## OUDH SERVICE STATION (2925), SHAKTI NAGAR,SONEBHADRA PIN-231222 PH :05446-232321.

SULTANPUR

1208.## HINDUSTAN AUTO GARAGE (1360), BARHAIYA BEER RD.,(ADJ.BUS STAND),SULTANPUR (U.P) PIN-228001 PH :05362-222838.

VARANASI

1209.** MISHRA ENGINEERS (4957), S-4/68,NAI BASTI, PAHARIA,VARANASI,UTTAR PRADESH PIN-221002 PH :0542-9415301483.

UTTARAKHAND

BAZPUR

1210.## TARAI AUTOMOBILE ENGG WORKS (4459), GURUTEG BAHADUR ROAD,U.S. NAGAR,BAZPUR,UTTARANCHAL PIN-262401 PH :05949-281342/ 9412945672.

BHAGESWAR

1211.## SHREE ISHT DEV AUTOMOBILES (4570), GARUR ROAD,MOTA SIMAL,DIST. BAGESHWAR,UTTARANCHAL PIN-263642 PH :05963-220699/ 220149/ 9412094543.

DEHRADUN

1212.## ASHIRWAD MOTORS (5144), CANAL ROAD,NEAR BALLUPUR CHOWK,DEHRADUN,UTTARANCHAL PIN-248001 PH :0133-6454745/ 9997232599.

1213.## KRIPALESHWARI MOTORS (4475), HARIDWAR ROAD,NEAR LIC BUILDING,DEHRADUN,UTTARANCHAL PIN-248001 PH :0135-2671712/ 9412963384.

1214.* SHREE RAM AUTOMOBILES (5066), NEAR TEHSIL,CHAKROTA ROAD,VIKAS NAGAR-DEHRADUN,UTTARANCHAL PIN-248001 PH :01360-9897731200/253601.

1215.## UNIVERSAL AUTOMOBILES (5574), F-107,UPSIDC INDUSTRIAL AREA,SELAQUI,DEHRADUN,DISTRICT - DEHRADUN,UTTRAKHAND PIN-248011 PH :0315-9927334346.

1216.## HANS LAKHERA MOTORS (5032), JOGI WALA RING ROAD,NATHAPUR APPARTMNT,NEAR NEHRU GRAM POST OFFC,MASSOORI BYEPASS, DEHRADUN PIN-248001 PH :0133-9897456677/2678844/9412933332.

HALDWANI

1217.* HARYAL SERVICE STATION (5340), BAREILY ROAD, GUAJALI - TALLI,HALDWANI,DISTRICT - NAINITAL,UTTARAKHAND PIN-263139 PH :-9997200227.

1218.## EXCEL MOTORS & ENGG. WORKS (3827), RAMPUR ROAD,NEAR STM FOREST HOSPITAL,HALDWANI,NAINITAL PIN-263136 PH :05946-235384.

** A-Category Mass : Free & paid Service, Major repairs & Accidental repairs

C-Category Mass : Free & paid Service & Minor repairs

* B-Category Mass : Free & paid Service & Major repairs

D-Category Mass : Free Service & Minor repairs

HARIDWAR

1219.## PREET MOTORS (5561), SHRI NATH NAGAR,RAILWAY ROAD, JAWALPUR - HARDWAR,DISTRICT - HARDWAR,UTTARANCHAL PIN-249407 PH :01334-250094/9412022430.

KANKHAL

1220.## HIGHWAY MOTORS (4261), NEAR SINGH DWAR CHOWK,ROORKEE-HARDWAR BY PASS ROAD,POST OFFICE, GURUKUL KANGRI,KANKHAL, DISTT HARDWAR PIN-380052 PH :01334-246999, 243125, 9837039946,9412074578,9412072889.

KASHIPUR

1221.## KRISHNA AUTOMOBILES (4824), MORADABAD ROAD,KASHIPUR PIN-244713 PH :05947-276079.

1222.## OM MOTORS (4329), NH-74 KASHIPUR MORADABAD HIGHWAY,(KHASRA NO.1343),KASHIPUR,DIST. UDAM SINGH NAGAR (UTTARAKHAND) PIN-244713 PH :05947-273944/ 9837719072.

KICHHA

1223.## SHREE SHYAM JI AUTO SERVICE CENTRE (5648), BAREILY ROAD, KICHHA,DISTRICT-UDHAM SINGH NAGAR,UTTRAKHAND PIN-263148 PH :05944-265033/9837033377.

KOTDWARA

1224.## BHATT MOTORS (1775), NAJIBABAD ROAD,KOTDWARA,(GARHWAL),UTTARANCHAL PIN-246149 PH :01382-225553/9412081333.

LAKSAR

1225.# SHIV AUTOMOBILES (5560), 110/1/3 BALAWALI ROAD,LAKSAR,DISTRICT - HARIDWAR,UTTARANCHAL PIN-247663 PH :-9719054422.

LOHRIASAL MALLA

1226.## ANJANI SERVICE CENTRE (5552), NEAR BLOCK OFFICE, KALADHUNGI ROAD,LOHRIASALMALLA,DISTRICT - NAINITAL,UTTARAKHAND PIN-263139 PH :-9837098699.

NEW TEHRI

1227.## BHAGWATI SERVICE CENTER (4472), SECTOR-8E/537,NEAR STADIUM, BARURI,NEW TEHRI,GARWAL (UTTRANCHAL) PIN-2249001 PH :01376-232341/ 9412394776/9759282913.

PAURI

1228.## KRISHNA MOTORS (5957), SHRINAGAR ROAD, NEAR KARGIL SHAHEED PETROL,PUMP, PAURI,DISTRICT-PAURI GARHWAL,UTTRANCHAL PIN-246001 PH :01368-222677.

PITHORAGARH

1229.## MAHAKALI MOTORS (4142), DHARCHULA ROAD,RAI BRIDGE,PITHORAGARH,UTTARANCHAL PIN-262501 PH :05964-9412168976/9897922203.

1230.## CAR CARE CENTER (4371), CANT ROAD,PITHORAGARH,UTTARANCHAL PIN-262501 PH :05964-228388/9412428288.

RANIKHET

1231.## LATIF MOTOR WORKS (3269), SADAR BAZAR,GANDHI CHOWK,RANIKHET,(UTTARANCHAL) PIN-263645 PH :05966-220225.

RISHIKESH

1232.* RAKESH AUTOMOBILE ENGINEERS (1464), OPP. BHARAT MANDIR INTER COLLEGE,HARDWAR ROAD,RISHIKESH PIN-249201 PH :0135-2430918/2431918/9412051655.

1233.## GARHWAL GASOLINE STATION (3639), H.P. PETROL PUMP,LAXMAN JHULA ROAD,RISHIKESH PIN-249 201 PH :0135-430351,438626,432617.

ROORKEE

1234.## DUM DUM ENGG. WORKS (1343), 72 CIVIL LINES,NEW HARDWAR ROAD,ROORKEE (U.P) PIN-247667 PH :01332-272903/9412070962.

1235.## ROORKEE AUTO SCANNERS (2675), 786 WEST AMBER TALAB,RAM NAGAR CHOWK,ROORKEE PIN-247667 PH :01332-262467/9837032367.

RUDRAPRAYAG

1236.## RAJESHWARI AUTOMOBILES (5669), BADRINATH ROAD, GHOLTIR,RUDRAPRAYAG,DISTRICT - RUDRAPRAYAG,UTTARANCHAL PIN-246141 PH :-9997771107.

RUDRAPUR

1237.** CORUS MOTORS (5059), D1 D2.20/1, NANITAL ROAD,DISTRICT - U.S. NAGAR,UTTARAKHAND PIN-263153 PH :05944-9927500007/241310.

1238.** BALAJI SERVICE CENTRE (1335), HALDWANI ROAD,RUDRAPUR (NAINITAL),(U.P) PIN-248197 PH :05944-243385.

SIMLI

1239.## PINDER AUTOMOBILES (5527), PLOT # C6-C9,INDUSTRIAL AREA,NEAR KARNAPRAYAG - SIMLI,UTTARANCHAL PIN-251001 PH :01363-9412977249/9837424700/247412/247554.

SITARGANJ

1240.## SHRI RAM MOTORS (5833), AGARWAL BHAWAN, BYE PASS ROAD,SITARGANJ,DISTRICT-UDHAM SINGH NAGAR,UTTARANCHAL PIN-242605 PH :05948-254083/9927131111.

VIKASNAGAR

1241.## SOUMYA MOTORS (4272), CHAKRATA ROAD,BEHIND STATE BANK OF INDIA,VIKASNAGAR,DISTT. DEHRADUN (U.A) PIN-248198 PH :01360-252951/ 9412382490/9319799470.

WEST BENGAL

ALIPUR DUAR

1242.## PRADDYOUT AUTOMOBILE WORK (653), PURAN BAZAR,P.O. ALIPURDUAR,JALPAIGURI,WEST BENGAL PIN-736121 PH :03564-255410/9434192320/9832487473.

ARAMBAGH

1243.## MARUTI ZONE (3748), VILLAGE - GARBARI, P.O. DIHIBAIRA,P.S. ARAMBAGH,DISTT. HOOGHLY,WEST BENGAL PIN-712601 PH :03211-258899, 9749139776.

ASANSOL

1244.** WEST END MOTORS (1665), KALYANPUR SATELITE TOWNSHIP PROJECT,KANYAPUR LINK ROAD, PALASHDIAH MORE,PO-KANYAPUR,ASANSOL, WESTBENGAL PIN-713341 PH :0341-9233317323.

1245.## AGARWALLA AUTO SERVICE (3122), 181 BURNPUR ROAD,P.O. BURNPUR,DT. BURDWAN,(WEST BENGAL) PIN- 713 325 PH :0341-2255300/9832123211.

BAHRAMPUR

1246.## NARAYAN BUS SERVICE (656), 17 RABINDRA THAKUR ROAD,P.O. BAHARAMPUR (WEST BENGAL) PIN-742101 PH :03482-224516/9732628065.

1247.* MARUTI CARE (3674), NH-34 UTTARPARA MORE,P.O. RADHARGHAT,BERHAMPORE,MURSHIDABAD (WEST BENGAL) PIN-742187 PH :03482-226428/9732444000/9434394040.

BALURGHAT

1248.## GHOSH AUTOMOBILES (2644), NARAYANPUR,BALURGHAT,DAKSHIN DINAJPUR PIN-733 101 PH :03522-255411, 9434963493/9474141384.

BANDEL

1249.## CAR HOSPITAL (3675), 2 NO. NETAJI PARK,G.T. ROAD,(OPP. MILITARY COLONY),BANDEL (WEST BENGAL) PIN-712123 PH :033-26318639/9831264416/ 9883178879.

BARRACKPORE

1250.## SAMANTA AUTOMOBILES PVT. LTD. (268), CHIRIMORE,BARRACKPORE,NORTH -24 PARGANAS,WEST BENGAL PIN-743101 PH :033-25120820/25420067/5600067/5600820/9831823079.

1251.## SPEED AUTOMOBILE (5445), BARRACKPORE-BARASAT ROAD,SEWLI, BARRACKORE,DISTRCIT - 24-PARAGANAS (NORTH),(WEST BENGAL) PIN-700121 PH :033-9836561219.

BIRPARA

1252.## PRATAP ENGINEERING WORKS (5246), NH-31, DEMDIMA,PO-BIRPARA,DISTRICT JALPAIGURI,WEST BENGAL PIN-735204 PH :03563-9434216975/9468023768/266486.

BOLPUR

1253.## BASUNDHARA AUTOMOBILES (4241), GOAL PARA,BOLPUR SURI ROAD,BOLPUR PIN-731204 PH :03463-254644, 9832132851.

CHINSURAH

** A-Category Mass : Free & paid Service, Major repairs & Accidental repairs

* B-Category Mass : Free & paid Service & Major repairs

C-Category Mass : Free & paid Service & Minor repairs

D-Category Mass : Free Service & Minor repairs

MARUTI AUTHORISED SERVICE STATIONS (MASS) (AS ON 01.04.2017)

1254.## UNIVERSAL AUTO REMEDY (648), C/O MR. BN CHATTERJEE,BHAGABOTI DANGA KHADINA MORE,PO CHINSURAH,HOOGHLY PIN-712102
PH :033-9748457883/26860303/26860090.

COOCH BEHAR

1255.## PROVA AUTOMOBILES (2846), CHAKCHAKA CHECK POST,NH-31,COOCH BEHAR,(WEST BENGAL) PIN-736101
PH :03582-258082/236204/9434174309/9434174309.

DHALKOLA

1256.## ZAINAB MOTORS (5738), NEAR NEW BUS STAND, NH-34,DALKHOLA,NORTH DINAJPUR,WEST BENGAL PIN-733201
PH :-9002524077.

DINHATA

1257.## DINHATA AUTOMOBILES (5739), BALRAMPUR ROAD PO/PS: DINHATA,DISTRICT-COOCHBEHAR,WEST BENGAL PIN-736135
PH :03581-259087/ 9333937795 / 9434256518.

DURGAPUR

1258.## THE QUICKEST (2879), BANS KOPA,(NEAR PARADISE INN),G.T. ROAD,DURGAPUR PIN-713212
PH :0343-2520805/9832165126/9749865126.

FARAKKA

1259.** SPEED WHEEL SERVICE CENTRE (1056), TTS HCC COLONY,FARAKKA,P.O. NABARUN,DISTT. MURSHIDABAD (W.B.) PIN-742236
PH :03485-252691/252269/9434101917/9434752269.

HABRA

1260.## EVERGREEN AUTOMOBILES & ENGINEERING WORKS (4666), BIRA JOYPUL,HABRA,NH-35,WEST BENGAL PIN-743234
PH :03216-269852/9333737566/269852/9830485232/ 9332906057.

HALDIA

1261.** S.D. REPAIRING CENTRE (2168), I.O.C. GATE NO.1,P.O. HALDIA OIL REFINERY,HALDIA,DISTT. MIDNAPORE (W.B.) PIN-721606
PH :03224-252152/645146/9434021405.

HOWRAH

1262.## GREWAL AUTO SERVICE (1570), 97/1 FORESHORE ROAD,SHIBPUR,HOWRAH PIN-711102
PH :-9831017806/26787250/26787024.

1263.## WHEEL WORKS (5063), GIP COLONY JAGACHA,KONA EXPRESS WAY.HOWRAH,DISTRICT - HOWRAH,WEST BENGAL PIN-711112
PH :033-9830044007/26575467.

JAIGAON

1264.** SHAKTI TRADING CO. (770), M.G. ROAD,JAIGAON PIN-736182
PH :0356-263241, 9547540605, 9233780027.

JALPAIGURI

1265.## AUTOSTEL (646), SAKOAJHORA,P.O. GAIRKATA,DIST. JALPAIGURI,(W.B.) PIN-735212
PH :03567-233116/9934111868.

1266.** S.S. AUTOMOBILES (3664), ASSAM MORE,JALPAIGURI,WEST BENGAL PIN-735101
PH :03561-9434340252/256565.

KALYANI

1267.## GOPAL AUTO SERVICE CENTRE (3373), B.K. EXPRESSWAY,BUDHHA PARK,KALYANI,NADIA (WEST BENGAL) PIN-741235
PH :033-25822481/9831010481.

1268.## KRISHNA ENGINEERING WORKS (5270), PLOT NO.199, KANTABELE.O.N.G.C ROAD,KALYANI EXPRESS ROAD, PO: GHORAGACHHA,PS - KALYANI,WEST BENGAL PIN-741235
PH :-9339964302/9378283965.

KOLKATA

1269.** AUTOKRAFT (620), F 1/G-3,RIC IND. ESTATE UPEN BANERJEE ROAD,PARNASREE,CALCUTTA (W.B) PIN-700060
PH :033-24925747/24925299/24078938/9830330090.

1270.* BHAWANIPUR AUTO CENTRE (628), 49 S.P. MUKHERJEE ROAD,CALCUTTA,(W.B) PIN-700 026
PH :033-24753130/24766011/9831783130.

1271.## CAMAC (621), 2/E CAMAC STREET,CALCUTTA,(W.B) PIN-700016
PH :033-9831093716/22296781.

1272.** DIAL AUTOMOBILES PVT. LTD. (643), 162 A PARY MOHAN RAY ROAD,CALCUTTA,(W.B) PIN-700027
PH :033-24484393/9830552491.

1273.** MOTORKRAFT (635), P-149 REMOUNT ROAD,CALCUTTA,(W.B) PIN-700027
PH :033-9830330090/24490737.

1274.## RUSSA ROAD SERVICE STATION (622), 30 SP MUKERJEE ROAD,CALCUTTA,(W.B) PIN-700025
PH :033-9748757842/24533384/24551146.

1275.## YOUNG AUTOMOBILES (637), 50/2 HAZARA ROAD,CALCUTTA,(W.B) PIN-700019
PH :033-24753944/9433552047/ 9830250904.

1276.* DELUXE SERVICE STATION (672), P-256 257 CIT ROAD,CALCUTTA PIN-700010
PH :033-23710012/23630151/9830062952/9830062979.

1277.** NORTH POINT MOTORS PVT. LTD. (344), DUTTO BAGAN - 3D/1 BUS TERMINUS,64/2B BELGACHIA ROAD,CALCUTTA PIN-700037
PH :033-9830220069/25560501/25573826.

1278.** ADAMS MOTOR WORKS (465), 61 A SHAKESPEARE SARANI,CALCUTTA,CALCUTTA PIN-700017
PH :033-9831020888/22876402/22807414.

1279.* MARUTI LINK (1633), CK-12 SECTOR 2,SALT LAKE,CALCUTTA PIN-700091
PH :033-23586921/23590675/9433004520/9831180421.

1280.** R.S. SERVICE CENTRE (1948), 1/2 MAHENDRE ROY LANE,CALCUTTA,CALCUTTA PIN-700046
PH :033-9831036017/9903992685/65293726.

1281.## AUTO SCAN (2272), 100/1 B.T. ROAD,CALCUTTA,CALCUTTA PIN-700090
PH :033-9231622309/25315066.

1282.* PRINCE MOTOR WORKSHOP (2845), TM - 2/8 TEGHARIA,P.O. HATIARA,CALCUTTA PIN-700059
PH :033-9836392945/ 9831555451/25703948.

1283.## INTERNATIONAL AUTO WORKS (2648), 48-C SOUTH TANGRA ROAD,KOLKATA PIN-700046
PH :033-9331265805/23282119.

1284.## SONA AUTO UDYOG (3144), 1404 PURBACHAL MAIN ROAD,OPP. KALIKAPUR MARKET,KOLKATA PIN-700099
PH :033-9331054525/2484373/24840682.

1285.## CLASSIC ENGINEERING WORKS (3171), C/O CLASSIC ENGINEERING WORKS,620 D H ROAD BEHALA INDUSTRIAL ESTATE,PLOT NO.G-1,KOLKATA PIN-700034
PH :033-9831773168/24477502.

1286.## FORTUNE AUTO CARE (3167), 16 G/6 KHANPUR ROAD,KOLKATA,(W.B.) PIN-700047
PH :033-24214439, 9831754527, 9831737980.

1287.## SUNNY AUTOMOBILE (3166), 105/H/18 BIDHAN NAGAR ROAD,KOLKATA PIN-700067
PH :033-9830392097/23562693.

1288.## ULTRA CRAFT (4643), 103/1B,RAJA DINENDRA STREET,KOLKATA,WEST BENGAL PIN-700006
PH :033-9830741255/23525006/5161.

1289.## ROYAL CALCUTTA AUTOMOBILES (4651), 68 BROAD STREET,KOLKATA PIN-700019
PH :033-9831299851/ 9883250911/22892829.

1290.## TECHNO AUTO WORKS (4669), 619, RAJA RAM MOHAN ROY ROAD,BIREN ROY ROAD EAST,BEHALA,KOLKATA PIN-700008
PH :033-9830111258/24068823/9939.

1291.## ZENITH AUTO (5529), BOHLA NATH SARANI,CHINAR PARK,RAJARHAT, KOLKATA-700157,DISTRICT - KOLKATA,WEST BENGAL PIN-700059
PH :033-9830643781/9830474175/9433904110/9433951707/65689931.

1292.## ZOVAN AUTOMOBILES PVT. LTD (5578), 42/A1B,RAJA SANTOSH ROAD,KOLKATA,DISTRICT - KOLKATA,WEST BENGAL PIN-700027
PH :033-24792490/24498004/9874795704.

1293.* RAJ AUTO SERVICE (5338), 35.CANAL EAST ROAD,KOLKATA,WEST BENGAL PIN-700011
PH :033-9831103901/23542996.

KRISHNANAGAR

1294.## TARA MA AUTOMOBILES (1947), BATHJANGLA,KRISHNA NAGAR,DISTT. NADIA (W.B.) PIN-741101
PH :03472-2722371/652357/9431054765.

1295.## HIGHWAY SERVICE CENTRE (4455), ASHA DEEP, NH-34,KRISHNANAGAR,NADIA,WEST BENGAL PIN-741101
PH :03472-9434165494/9831186730.

MADHYAMGRAM

1296.* PAUL AUTOMOBILES (671), JESSORE ROAD,MADHYAMGRAM,DOHARIYA PO GANGANAGAR,DISTT 24 PGNS NORTH PIN-700129
PH :033-9830239001/69904062/28261051.

** A-Category Mass : Free & paid Service, Major repairs & Accidental repairs

* B-Category Mass : Free & paid Service & Major repairs

C-Category Mass : Free & paid Service & Minor repairs

D-Category Mass : Free Service & Minor repairs

1297.# J. G BEHAL AUTO (4653), DOLTALA,GANGANAGAR,MADHYAMGRAM,KOLKATA (WEST BENGAL) PIN-700129 PH :033-9831094430/25268294/64511516.

MALDA

1298.## ABHISEK AUTO CENTRE (1976), N.H.34,NEAR ST. XAVIER SCHOOL,P.O. MOKDUMPUR,DISTT. MALDA (W.B.) PIN-732101 PH :03512-9434065360/253987.

MIDNAPORE

1299.# CHATTERJEE AUTOMOBILE (4960), INDUSTRIAL GROWTH AREA,KHASJANGAL (NEAR KERANICHOTI),MIDNAPORE,DISTRICT-PACHIM MIDNAPORE PIN-721101 PH :-9434043558.

NARENDRAPUR

1300.## A.M. AUTOMOBILES (3175), KAMALGAZI,NARENDURPUR,KOLKATA,(WEST BENGAL) PIN-700103 PH :033-9836038971/2477 3402.

PURULIA

1301.## BANERJEE AUTO SERVICE (640), S.P.BANERJEE ANALBILA VILLA,RANCHI ROAD,PURULIA,(W.B) PIN-723101 PH :03252-9434656942/223228.

RAGHUNATHGANJ

1302.## AUTO WHEEL (4427), UMARPUR, NH-34,GHORSHALA,RAGHUNATH GANJ,MURSHIDABAD (WEST BENGAL) PIN-742225 PH :03488-9434083866/267281.

RUPNARAYANPUR

1303.## L. K. MOTORS (3477), NH 2 BYPASS,POINT (CHOWRANGI),RUPNARAYANPUR (CHALBALPUR),BURDWAN PIN-713343 PH :0341-2513800/9434107787.

SILIGURI

1304.# BHAWANI MOTOR GARAGE (4844), BIDYASAGAR PALLY,NEAR RISHI BHAWAN, BURDWAN ROAD,SILIGURI,WEST BENGAL PIN-734405 PH :0358-9434152177/ 9434376860/2500418.

1305.# MUM AUTO WORKS (4835), NEAR DELHI PUBLIC SCHOOL,PANCHANAI (DAGAPUR),SILIGURI,WEST BENGAL PIN-734003 PH :-9832068537.

SODEPUR

1306.** CAR CARE (1950), B.T. ROAD,SODEPUR,P.O.: SUKCHAR,24 PARGANAS (NORTH) PIN-700115 PH :033-25830783/25832786/25635800/9830049177.

SRIRAMPUR

1307.* MARUTI AUTO CENTRE (2167), 85/18 G.T. ROAD (WEST),PO : MULLIKPARA,SRIRAMPUR,HOOGLY (W.B.) PIN-712203 PH :033-9831299543/ 9331884559/26225634.

SURI

1308.## PANCHANATH AUTOMOBILES (4456), BROJARGRAM BARABAGAN,BAKRESWAR PATHARCHAPURI HIGHWAY MORE,SURI,WEST BENGAL PIN-731101 PH :03462-9831823079/25920182.

ULUBERIA

1309.## APSARA SERVICE STATION (3374), NEAR BANITABLA CHECKPOST,ON NH-6,ULUBERIA,(W.B.) PIN-711316 PH :033-9836084524/26610656.

** A-Category Mass : Free & paid Service, Major repairs & Accidental repairs

* B-Category Mass : Free & paid Service & Major repairs

C-Category Mass : Free & paid Service & Minor repairs

D-Category Mass : Free Service & Minor repairs

MEMO

MEMO

MEMO